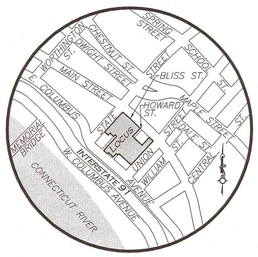

LOCUS MAP
NOT TO SCALE

SITE IMPROVEMENT PLANS FOR
MGM - SPRINGFIELD
SPRINGFIELD, MA 01105

OWNER/APPLICANT:
MGM SPRINGFIELD
BLUE TARP ReDEVELOPMENT LLC
1441 MAIN STREET
SPRINGFIELD, MA 01103
(413) 735-3000

CIVIL ENGINEER / LAND SURVEYOR:
ALLEN & MAJOR ASSOCIATES, INC.
100 COMMERCE WAY
WOBURN, MA 01801
(781) 935-6889

ARCHITECT:
FRIEDMUTTER GROUP
4022 DEAN MARTIN DRIVE
LAS VEGAS, NV 89103
(702) 736-7477

GEOTECHNICAL ENGINEER:
SANBORN HEAD & ASSOCIATES INC.
1 TECHNOLOGY PARK DR.
WESTFORD, MA 01886
(978) 392-0900

TRAFFIC ENGINEERS:
TEC, INC.
65 GLENN STREET
LAWRENCE MA 01843
(978) 794-1792

M/E/P ENGINEERS:
GIOVANETTI SHULMAN ASSOCIATES/RDK
370 REED ROAD, SUITE 201
BROOMALL, PA 19008
(610) 328-7700

STRUCTURAL ENGINEER:
DESIMONE CONSULTING ENGINEERS
77 FRANKLIN STREETE, 5TH FLOOR
BOSTON, MA 02210
(617) 936-4492

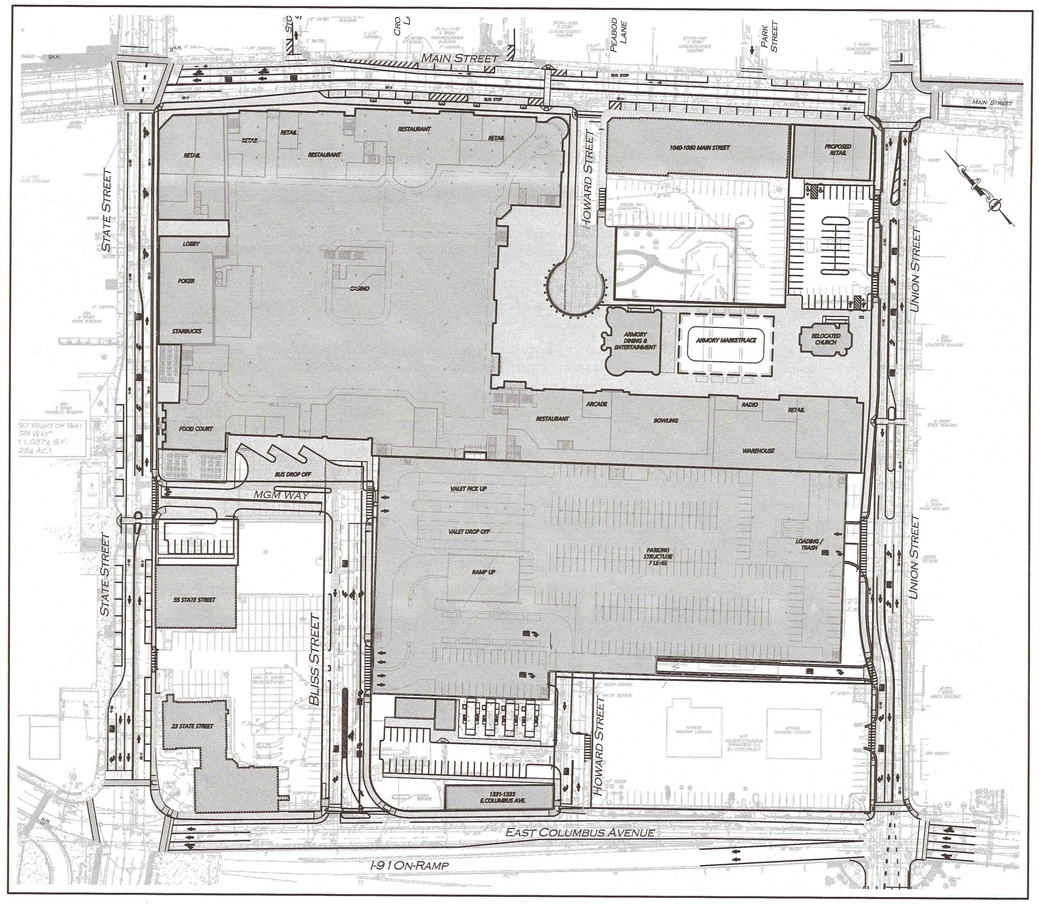

GRAPHIC SCALE
100 0 50 100 200 400
(IN FEET)
1 inch = 100 ft.

LIST OF DRAWINGS

SITE PLANS	SHEET	ISSUED	REVISED
ABBREVIATIONS & NOTES	ABB-1	08-14-2015	10-23-2015
ABBREVIATIONS & NOTES	ABB-2	08-14-2015	10-23-2015
EXISTING CONDITIONS PLAN	EX-1	08-14-2015	—
EXISTING CONDITIONS PLAN	EX-2	08-14-2015	—
PROJECT PROPERTY LINE PLAN	PL-1	08-14-2015	—
PROPOSED OVERALL LAYOUT PLAN	C-1	08-14-2015	10-23-2015
PROPOSED LAYOUT PLAN	C-1A	08-14-2015	10-23-2015
PROPOSED LAYOUT PLAN	C-1B	08-14-2015	10-23-2015
PROPOSED OVERALL GRADING & DRAINAGE PLAN	C-2	08-14-2015	10-23-2015
PROPOSED GRADING & DRAINAGE PLAN	C-2A	08-14-2015	10-23-2015
PROPOSED GRADING & DRAINAGE PLAN	C-2B	08-14-2015	10-23-2015
PROPOSED OVERALL UTILITY PLAN	C-3	08-14-2015	10-23-2015
PROPOSED UTILITY PLAN	C-3A	08-14-2015	10-23-2015
PROPOSED UTILITY PLAN	C-3B	08-14-2015	10-23-2015
PROPOSED WATER PLAN	C-3C	—	10-23-2015
PROPOSED WATER PLAN	C-3D	—	10-23-2015
PROPOSED OVERALL ELECTRICAL PLAN	C-4	08-14-2015	10-23-2015
PROPOSED ELECTRICAL PLAN	C-4A	08-14-2015	10-23-2015
PROPOSED ELECTRICAL PLAN	C-4B	08-14-2015	10-23-2015
LOCUS PLAN	C-5	08-14-2015	—
WATER MAIN IMPROVEMENTS PLAN & PROFILE MAIN STREET	W-1	—	10-23-2015
WATER MAIN CONNECTIONS PLAN & PROFILE MAIN STREET	W-2	—	10-23-2015
WATER MAIN IMPROVEMENTS PLAN & PROFILE STATE STREET	W-3	—	10-23-2015
WATER MAIN CONNECTIONS PLAN & PROFILE STATE STREET	W-4	—	10-23-2015
WATER MAIN IMPROVEMENTS PLAN & PROFILE BLISS STREET	W-5	—	10-23-2015
WATER MAIN CONNECTIONS PLAN & PROFILE BLISS STREET	W-6	—	10-23-2015
WATER MAIN IMPROVEMENTS PLAN & PROFILE HOWARD STREET	W-7	—	10-23-2015
WATER MAIN CONNECTIONS PLAN & PROFILE HOWARD STREET	W-8	—	10-23-2015
WATER MAIN IMPROVEMENTS PLAN & PROFILE UNION STREET	W-9	—	10-23-2015
WATER MAIN CONNECTIONS PLAN & PROFILE UNION STREET	W-10	—	10-23-2015
WATER MAIN IMPROVEMENTS PLAN & PROFILE E. COLUMBUS AVE.	W-11	—	10-23-2015
WATER MAIN CONNECTIONS PLAN & PROFILE E. COLUMBUS AVE.	W-12	—	10-23-2015
WATER MAIN IMPROVEMENTS PLAN & PROFILE MGM WAY	W-13	—	10-23-2015
SEWER MAIN & DRAINAGE IMPROVEMENTS PLAN & PROFILE MAIN STREET	S-1	—	10-23-2015
SEWER MAIN & DRAINAGE CONNECTIONS PLAN & PROFILE MAIN STREET	S-2	—	10-23-2015
SEWER MAIN & DRAINAGE IMPROVEMENTS PLAN & PROFILE STATE STREET	S-3	—	10-23-2015
SEWER MAIN & DRAINAGE CONNECTIONS PLAN & PROFILE STATE STREET	S-4	—	10-23-2015
SEWER MAIN & DRAINAGE IMPROVEMENTS PLAN & PROFILE BLISS STREET	S-5	—	10-23-2015
SEWER MAIN & DRAINAGE CONNECTIONS PLAN & PROFILE BLISS STREET	S-6	—	10-23-2015
SEWER MAIN & DRAINAGE IMPROVEMENTS PLAN & PROFILE HOWARD STREET	S-7	—	10-23-2015
SEWER MAIN & DRAINAGE CONNECTIONS PLAN & PROFILE HOWARD STREET	S-8	—	10-23-2015
SEWER MAIN & DRAINAGE IMPROVEMENTS PLAN & PROFILE UNION STREET	S-9	—	10-23-2015
SEWER MAIN & DRAINAGE CONNECTIONS PLAN & PROFILE UNION STREET	S-10	—	10-23-2015
SEWER MAIN & DRAINAGE IMPROVEMENTS PLAN & PROFILE E. COLUMBUS AVE.	S-11	—	10-23-2015
SEWER MAIN & DRAINAGE CONNECTIONS PLAN & PROFILE E. COLUMBUS AVE.	S-12	—	10-23-2015
SEWER MAIN & DRAINAGE IMPROVEMENTS PLAN & PROFILE MGM WAY	S-13	—	10-23-2015
DETAILS	D-1 - D-14	08-14-2015	10-23-2015

PREPARED BY:
ALLEN & MAJOR ASSOCIATES, INC.
civil & structural engineering ◆ land surveying
environmental consulting ◆ landscape architecture
www.allenmajor.com
100 COMMERCE WAY
P.O. BOX 2118
WOBURN MA 01888-0118
TEL: (781) 935-6889
FAX: (781) 935-2896
WOBURN, MA ◆ LAKEVILLE, MA ◆ MANCHESTER, NH

Copyright©2015 Allen & Major Associates, Inc.
All Rights Reserved

COMMONWEALTH OF MASSACHUSETTS
TIMOTHY J. WILLIAMS
CIVIL
No. 43119
REGISTERED PROFESSIONAL ENGINEER
10/23/15

PROFESSIONAL ENGINEER FOR
ALLEN & MAJOR ASSOCIATES, INC.

ISSUED FOR SITE PLAN APPROVAL: AUGUST 14, 2015

REISSUED FOR SITE PLAN APPROVAL: OCTOBER 23, 2015

N:\PROJECTS\1839-02\CIVIL\DRAWINGS\CURRENT\C-1839-02 - COVER - 30X42 - PERMIT.DWG

GENERAL NOTES:

1. FOR EXISTING CONDITIONS SURVEY, SEE PLAN ENTITLED "EXISTING CONDITIONS PLAN; SHEET EX-1 & EX-2", AND PLAN ENTITLED "PROJECT PROPERTY LINE PLAN; SHEET PL-1", FOR APPLICANT "MGM SPRINGFIELD, BLUE TARP REDEVELOPMENT, LLC.", AS PREPARED BY ALLEN & MAJOR ASSOCIATES, INC. THE ON THE GROUND SURVEY WAS PERFORMED ON OR BETWEEN AUGUST 30, 2012 AND SEPTEMBER 14, 2014.
2. ZONING DISTRICT IS CASINO OVERLAY DISTRICT (COD).
3. OVERALL LOT SIZE: 13.96± ACRES
4. THIS PROJECT WILL BE SERVED BY PUBLIC WATER AND SEWER, NATURAL GAS, TELEPHONE, CABLE AND ELECTRIC. ALL UTILITY LINES WILL BE INSTALLED UNDERGROUND UNLESS OTHERWISE NOTED.
5. THE CONTRACTOR IS SPECIFICALLY CAUTIONED THAT THE LOCATION AND/OR ELEVATION OF EXISTING UTILITIES AND STRUCTURES AS SHOWN ON THESE PLANS IS BASED ON RECORDS OF VARIOUS UTILITY COMPANIES AND WHERE POSSIBLE, MEASUREMENTS TAKEN IN THE FIELD. THIS INFORMATION IS NOT TO BE RELIED ON AS BEING EXACT OR COMPLETE. THE LOCATION OF ALL UNDERGROUND UTILITIES AND STRUCTURES SHALL BE VERIFIED IN THE FIELD BY THE CONTRACTOR PRIOR TO THE START OF CONSTRUCTION. THE CONTRACTOR MUST CONTACT THE APPROPRIATE UTILITY COMPANY, ANY GOVERNING PERMITTING AUTHORITY, AND "DIGSAFE" AT LEAST 72 HOURS PRIOR TO ANY EXCAVATION WORK TO REQUEST EXACT FIELD LOCATION OF UTILITIES AND THE ENGINEER SHALL BE NOTIFIED IN WRITING OF ANY UTILITIES INTERFERING WITH THE PROPOSED CONSTRUCTION AND APPROPRIATE REMEDIAL ACTION TAKEN BEFORE PROCEEDING WITH THE WORK. IT SHALL BE THE RESPONSIBILITY OF THE CONTRACTOR TO RELOCATE ALL EXISTING UTILITIES WHICH CONFLICT WITH THE PROPOSED IMPROVEMENTS SHOWN ON THE PLANS AT NO ADDITIONAL COST.
6. ALL MAIN BUILDING ENTRANCES AND WALKS SHALL BE HANDICAP ACCESSIBLE PER FEDERAL ADA & MA AAB REGULATIONS.
7. ALL SITE WORK DONE FOR THIS PROJECT SHALL BE IN ACCORDANCE WITH THE SITE PLANS AND SITE WORK SPECIFICATIONS FOR CONSTRUCTION.
8. ANY DAMAGE TO PRIVATE OR PUBLIC PROPERTIES DUE TO THE CONTRACTOR'S ACTIVITIES SHALL BE REPAIRED AND RESTORED BY THE CONTRACTOR AT THEIR OWN EXPENSE.
9. ALL PROPERTY MARKERS AND STREET LINE MONUMENTS SHALL BE PROPERLY PROTECTED DURING CONSTRUCTION. ANY DAMAGE TO THESE ITEMS SHALL BE REPAIRED AND RESTORED BY A SURVEYOR REGISTERED IN THE STATE OF MASSACHUSETTS AT THE CONTRACTORS EXPENSE.
10. ALL DISTURBED AREAS SHALL BE MAINTAINED IN ACCORDANCE WITH THE EROSION CONTROL PLAN, MA DEP, AND THE REQUIREMENTS OF THE SPRINGFIELD CONSERVATION COMMISSION.
11. ALL APPLICABLE PERMITS AND AN APPROVED SET OF PLANS SHALL BE AVAILABLE AT THE CONSTRUCTION SITE.
12. THE CONTRACTOR IS RESPONSIBLE FOR SCHEDULING A PRECONSTRUCTION MEETING WITH THE APPROPRIATE CITY DEPARTMENTS, THE APPROPRIATE UTILITY COMPANIES, THE OWNER AND OWNER'S REPRESENTATIVE. THE MEETING SHALL TAKE PLACE PRIOR TO THE START OF CONSTRUCTION AND THE CONTRACTOR MUST PROVIDE 48 HOURS NOTICE TO ALL ATTENDEES PRIOR TO THE START OF THE MEETING.
13. APPROPRIATE WARNING SIGNS, MARKERS, BARRICADES AND/OR FLAG MEN SHALL BE PROVIDED TO REGULATE TRAFFIC. CONSTRUCTION TRAFFIC CONTROLS SHALL BE IMPLEMENTED AND OPERATED ACCORDING TO THE MASS DEPARTMENT OF TRANSPORTATION, THE MANUAL ON UNIFORM TRAFFIC CONTROL DEVICES (MUTCD) AND THE LOCAL AUTHORITY.
14. THE CONTRACTOR IS RESPONSIBLE FOR OBTAINING ADDITIONAL BENCHMARK INFORMATION IF REQUIRED. THE CONTRACTOR IS RESPONSIBLE FOR LOCATING AND PROTECTING ALL EXISTING BENCHMARKS. IF IT IS NECESSARY TO RELOCATE A BENCHMARK, IT SHALL BE RELOCATED BY A MASSACHUSETTS PROFESSIONAL LAND SURVEYOR AND DONE SO AT THE CONTRACTOR'S EXPENSE.
15. ALL PERMITS AND APPROVALS NECESSARY FROM AGENCIES GOVERNING THE WORK SHALL BE OBTAINED BY THE CONTRACTOR PRIOR TO THE COMMENCEMENT OF WORK.
16. ALL BUILDING DIMENSIONS ARE MEASURED TO THE OUTSIDE FACE OF THE BUILDING.
17. ALL RADII ARE 3 FEET UNLESS OTHERWISE NOTED.
18. ALL PARKING LOT AND AISLE DIMENSIONS ARE TAKEN FROM THE FACE OF CURB AND INDICATE EDGE OF PAVEMENT.
19. IT IS THE CONTRACTORS RESPONSIBILITY TO ENSURE THAT EROSION AND SEDIMENTATION CONTROL MEASURES SHALL BE IN PLACE PRIOR TO THE COMMENCEMENT OF ANY SITE WORK OR EARTHWORK OPERATIONS. IT SHALL BE MAINTAINED DURING CONSTRUCTION, AND SHALL REMAIN IN PLACE UNTIL ALL SITE WORK IS COMPLETE AND GROUND COVER IS ESTABLISHED. ADDITIONAL EROSION CONTROL MEASURES SHALL BE INSTALLED IF DEEMED NECESSARY PER ON SITE INSPECTIONS OF THE OWNER, THEIR REPRESENTATIVES, OR REGULATORY AGENCIES HAVING JURISDICTION AT NO ADDITIONAL COST TO THE OWNER.
20. CONSTRUCTION DURING WET WEATHER OR WINTER CONDITIONS IS TO BE ANTICIPATED AND PROVISIONS TO ADEQUATELY ADDRESS THESE CONDITIONS SHALL BE THE RESPONSIBILITY OF THE CONTRACTOR AT NO ADDITIONAL COST.
21. THE CONTRACTOR IS RESPONSIBLE FOR OBTAINING AND PAYING FOR ANY PERMITS AND/OR CONNECTION FEES REQUIRED TO CARRY OUT THE WORK INCLUDING BUT NOT LIMITED TO DEMOLITION.
22. DISPOSAL OF ALL DEMOLISHED MATERIALS INCLUDING EXISTING MISC. CONSTRUCTION DEBRIS FILL IS THE RESPONSIBILITY OF THE CONTRACTOR AND MUST BE DISPOSED OF OFF-SITE IN ACCORDANCE WITH ALL FEDERAL, STATE, AND LOCAL MUNICIPAL REQUIREMENTS AT NO ADDITIONAL COST.
23. ALL DISTURBED AREAS NOT NOTED TO RECEIVE OTHER TREATMENT ARE TO RECEIVE SIX INCHES (6") MINIMUM OF TOPSOIL & SEED, AND BE MAINTAINED UNTIL ESTABLISHED & ACCEPTED.
24. EXISTING STRUCTURES WITHIN CONSTRUCTION LIMITS ARE TO BE ABANDONED, REMOVED OR RELOCATED AS NECESSARY.
25. CONTRACTOR SHALL BE RESPONSIBLE FOR ALL RELOCATIONS, INCLUDING BUT NOT LIMITED TO, ALL UTILITIES, STORM DRAINAGE, SIGNS, TRAFFIC SIGNALS & POLES, ETC. AS REQUIRED. ALL WORK SHALL BE IN ACCORDANCE WITH THE CITY OF SPRINGFIELD'S GOVERNING AUTHORITY'S SPECIFICATIONS AND SHALL BE APPROVED BY SUCH.
26. THE CONTRACTOR SHALL COORDINATE WITH ALL UTILITY COMPANIES TO DETERMINE EXACT POINT OF SERVICE CONNECTION AND DISCONNECTION AT EXISTING UTILITY.
27. ALL ELEVATIONS SHOWN ARE IN REFERENCE TO THE BENCHMARK AND MUST BE VERIFIED BY THE GENERAL CONTRACTOR AT GROUNDBREAK.
28. EXISTING AND PROPOSED GAS SERVICE LOCATIONS ARE APPROXIMATE ONLY. THE CONTRACTOR SHALL CONFIRM WITH THE GAS COMPANY THAT THE GAS LINE INSTALLATION & DISCONNECTION SHALL BE BY THE LOCAL GAS COMPANY. THE CONTRACTOR SHALL GIVE THE GAS COMPANY ADVANCE NOTICE OF WHEN THE GAS LINE CAN BE INSTALLED.
29. EXISTING & PROPOSED ELECTRIC AND COMMUNICATIONS (TELEPHONE AND CABLE) SYSTEMS LOCATIONS ARE APPROXIMATE ONLY AND SHALL BE COORDINATED AND SCHEDULED WITH THE APPROXIMATE UTILITY COMPANY SERVICING THE PROJECT SITE.
30. CONTRACTOR IS RESPONSIBLE FOR DIGGING TEST HOLES AND VERIFYING ANY EXISTING UTILITY OR STRUCTURE PRIOR TO CONSTRUCTION. CONTRACTOR SHALL VERIFY THAT BASED ON EXACT LOCATION OF EXISTING UTILITIES, THERE ARE NO CONFLICTS BETWEEN THEM AND THE PROPOSED UTILITIES.
31. THE CONTRACTOR SHALL ADHERE TO ALL PERMIT CONDITIONS PROVIDED BY ALL GOVERNING AGENCIES AT NO ADDITIONAL COSTS. THIS INCLUDES BUT IS NOT LIMITED TO BUILDING PERMITS, DEMOLITION PERMITS, PLUMBING, GAS, AND ELECTRICAL PERMITS.
32. IT IS THE CONTRACTORS RESPONSIBILITY TO PROPERLY DISPOSE OF AND ABATE ALL BUILDING MATERIALS OR HAZARDOUS BUILDING MATERIALS ONSITE IN ACCORDANCE WITH ALL STATE, FEDERAL, AND LOCAL LAWS AND REGULATIONS AT NO ADDITIONAL COST TO THE OWNER.
33. DURING EXCAVATION, ANY EXISTING EARTH CUT MATERIALS THAT DOES NOT MEET THE ORDINARY FILL SPECIFICATIONS OR LOAM SPECIFICATIONS AND CANNOT BE REUSED SHALL BE REMOVED OFFSITE BY THE CONTRACTOR AT NO ADDITIONAL COST TO THE OWNERS. MATERIAL WHICH DOES NOT MEET THE SPECIFICATION INCLUDES ALL BOULDERS, ROCKS, CONSTRUCTION DEBRIS. PRIOR TO REUSE, CONTRACTOR TO PROVIDE TESTING REPORT OF SIEVE ANALYSIS TO ENGINEER FOR APPROVAL. CONTRACTOR CAN AMEND MATERIALS AND CONTINUE TO RETEST AS NECESSARY AT NO ADDITIONAL COST TO OWNER. AFTER AMENDING IF MATERIAL STILL DOES NOT MEET THE SPECIFICATIONS IT IS TO BE REMOVED FROM SITE AT NO ADDITIONAL COST TO THE OWNER AND IN ACCORDANCE WITH ALL FEDERAL, STATE, AND LOCAL LAWS AND REGULATIONS.
34. CONTRACTOR IS REQUIRED TO OBTAIN AN OCCUPANCY AND / OR EXCAVATION PERMIT FROM THE SPRINGFIELD DEPARTMENT OF PUBLIC WORKS (DPW) FOR ANY WORK THAT WILL BE OCCURRING WITHIN THE CITY'S DEFINED RIGHT-OF-WAY. IF WORK IS COMPLETED PRIOR TO THE ISSUANCE OF AN APPROPRIATE PERMIT STOP-WORK ORDER WILL BE ISSUED AND FINES WILL BE ASSESSED.

GENERAL NOTES (CONT.):

35. CONTRACTOR SHALL BE RESPONSIBLE FOR SITE SECURITY AND JOB SAFETY, CONSTRUCTION ACTIVITIES SHALL BE IN ACCORDANCE WITH OSHA STANDARDS AND LOCAL REQUIREMENTS.
36. CONTRACTOR SHALL ENSURE THE MAINTENANCE OF SAFETY AND TRAFFIC FLOW ON THE PUBLIC AND PRIVATE WAYS AFFECTED BY THE CONSTRUCTION OF THIS PROJECT. THE CONSTRUCTION SITE MUST BE ACCESSIBLE TO EMERGENCY VEHICLES AT ALL TIMES.
37. ACCESSIBLE ROUTES, PARKING SPACES, RAMPS, SIDEWALKS AND WALKWAYS SHALL BE CONSTRUCTED IN CONFORMANCE WITH THE FEDERAL AMERICANS WITH DISABILITIES ACT (ADA) AND STATE AND LOCAL LAWS AND REGULATIONS (WHICHEVER ARE MORE STRINGENT).
38. CONTRACTOR SHALL CAREFULLY COORDINATE ALL WORK WITH THAT OF HIS/HER SUBCONTRACTORS, THE OWNER AND OTHER CONTRACTORS WORKING WITHIN THE PROJECT LIMITS.
39. ALL WORK SHALL BE PERFORMED IN ACCORDANCE WITH THE SWSC RULES AND REGULATIONS, GUIDELINES AND POLICIES, AND MATERIAL SPECIFICATION. IF CONFLICT BETWEEN PLAN SET AND PROJECT SPECIFICATIONS, THE SWSC RULES AND REGULATIONS, GUIDELINES AND POLICIES AND MATERIAL SPECIFICATIONS SHALL GOVERN.
40. WORK WITHIN STATE RIGHTS-OF-WAY SHALL CONFORM TO THE LATEST EDITION OF THE STATE HIGHWAY DEPARTMENT'S STANDARD SPECIFICATIONS FOR HIGHWAYS AND BRIDGES. WORK WITHIN THE LOCAL RIGHTS-OF-WAY SHALL CONFORM TO THE CITY OF SPRINGFIELD D.P.W. AND SPRINGFIELD WATER AND SEWER COMMISSION (SWSC) STANDARDS. SWSC AND CITY OF SPRINGFIELD STANDARD DETAILS ARE LOCATED IN APPENDIX OF SPECIFICATIONS.
41. BEFORE STARTING CONSTRUCTION, THE CONTRACTOR SHALL BE SOLELY RESPONSIBLE FOR MAKING ALL NECESSARY ARRANGEMENTS FOR COORDINATING AND/OR PERFORMING ALL NECESSARY WORK IN CONNECTION WITH THE DISCONTINUANCE OF ANY UTILITIES WITHIN THE PROJECT LIMITS. ALL EXISTING UTILITY SERVICES SHALL BE MAINTAINED DURING CONSTRUCTION.
42. ALL EXISTING MUNICIPAL CASTINGS, INCLUDING WATER VALVE BOXES, WATER MANHOLES, SEWER/COMBINATION MANHOLES AND CATCH BASINS WITHIN THE PROJECT LIMITS SHALL BE ADJUSTED TO LINE AND GRADE BY THE CONTRACTOR, AS NECESSARY. ALL PRIVATE TELEPHONE, CABLE TELEVISION, COMMUNICATION, GAS AND ELECTRIC CASTINGS WITHIN THE PROJECT LIMITS SHALL BE ADJUSTED BY THE OWNER, AS NECESSARY.
43. CONTRACTOR SHALL ENSURE THAT "AS-BUILT" SITE AND UTILITY DRAWINGS ARE SUBMITTED TO THE ENGINEER UPON COMPLETION OF THIS PROJECT. "AS-BUILT" INFORMATION SHALL BE RECORDED ON A DAILY BASIS.
44. 31. WHERE A NEW ASPHALT PAVEMENT SHALL MEET EXISTING ASPHALT PAVEMENT, THE JOINT SHALL BE SAWCUT TO A NEAT VERTICAL LINE. THE CONTRACTOR SHALL PROVIDE A SMOOTH, FLUSH TRANSITION AT THE JOINT. THE CONTRACTOR SHALL SEAL WITH BITUMEN AND SAND THE JOINT.
45. CONTRACTOR SHALL CONTROL STORMWATER RUNOFF DURING CONSTRUCTION TO PREVENT ADVERSE IMPACTS TO DRAINAGE SYSTEM AND OFF SITE AREAS, AND SHALL BE RESPONSIBLE FOR REPAIRS RESULTING FROM DAMAGES. IF ANY, AT NO COST TO OWNER AND THE CITY OF SPRINGFIELD.
46. CONTRACTOR SHALL, AT LEAST 14 DAYS IN ADVANCE, NOTIFY THE ENGINEER, CITY OF SPRINGFIELD PUBLIC WORKS DEPARTMENT, POLICE AND FIRE DEPARTMENT, AND SCHOOL BUS COMPANIES, IN WRITING, WITH A COPY TO THE ENGINEER, OF ANY ROAD CLOSURES, DETOURS OR PAVING.
47. CONTRACTOR SHALL BE RESPONSIBLE FOR CONSTRUCTION SITE DEWATERING AND MAINTENANCE OF EXISTING FLOWS AT ALL TIMES DURING CONSTRUCTION. ALL DISCHARGES FROM DEWATERING ACTIVITIES SHALL BE FREE FROM SUSPENDED SEDIMENTS AND SHALL BE TREATED FOR SEDIMENT REMOVAL PRIOR TO DISCHARGE.
48. DURING CONSTRUCTION, THE CONTRACTOR MUST PROVIDE A SUBSTANTIALLY DRY AND STABLE SUBGRADE FOR OPEN-CUT CONSTRUCTION OPERATIONS, AND TO CONTROL GROUNDWATER INFLOW INTO TRENCHES AND OTHER EXCAVATIONS SO AS NOT TO ADVERSELY IMPACT THE CONSTRUCTION OPERATIONS. GROUNDWATER SHALL BE LOWERED TO AT LEAST 2 FEET BELOW EXCAVATION INVERT USING PRE-DRAINAGE METHODS OF DEWATERING AS DESCRIBED IN THE TECHNICAL SPECIFICATIONS. THE CONTRACTOR IS REQUIRED TO KEEP THE GROUNDWATER LOWERED UNTIL THE TRENCH HAS BEEN BACKFILLED. THE CONTRACTOR MUST MAINTAIN THE GROUNDWATER BELOW THIS LEVEL SO THE CONDUIT DOES NOT BECOME BUOYANT.
49. THE CONTRACTOR SHALL PROVIDE AND STORE AUXILIARY DEWATERING EQUIPMENT ON THE SITE IN THE EVENT OF BREAKDOWN.
50. WATER FROM THE TRENCHES AND EXCAVATIONS SHALL BE DISPOSED OF IN SUCH A MANNER AS TO AVOID PUBLIC NUISANCE, INJURY TO PUBLIC HEALTH OR THE ENVIRONMENT, DAMAGE TO PUBLIC OR PRIVATE PROPERTY, OR DAMAGE TO THE WORK COMPLETED OR IN PROGRESS. SILTATION BARRIERS AND SEDIMENT TANKS SHALL BE UTILIZED AS NECESSARY.
51. WATER FROM TRENCHES AND EXCAVATIONS SHALL NOT BE DISCHARGED DIRECTLY TO STORM DRAIN SYSTEMS. PROPER TREATMENT THROUGH SEDIMENTATION DEVICE OR SEDIMENTATION AREA SHALL BE PROVIDED PRIOR TO DISCHARGE TO ANY DRAINAGE SYSTEMS.
52. CONTRACTOR SHALL OBTAIN AUTHORIZATION FROM SWSC PRIOR TO DISCHARGING TO EXISTING STORM DRAINS OR SANITARY SEWERS.
53. CONTRACTOR SHALL REPAIR ANY DAMAGE RESULTING FROM THE FAILURE OF THE DEWATERING OPERATIONS OR FROM FAILURE TO MAINTAIN ALL THE AREAS OF WORK IN A SUITABLE DRY CONDITION.
54. EXISTING PAVEMENT SHALL BE SAW-CUT AND PAVEMENT JOINT SHALL BE INSTALLED WHERE NECESSARY TO ENSURE A SMOOTH CONTINUOUS GRADE.
55. ALL PIPELINES OR STRUCTURES NOT STABLE AGAINST UPLIFT DURING CONSTRUCTION OR PRIOR TO COMPLETION SHALL BE THOROUGHLY BRACED OR OTHERWISE PROTECTED.
56. DO NOT EXCAVATE UNTIL THE DEWATERING SYSTEM IS OPERATIONAL SUCH THAT THE EXCAVATION MAY PROCEED WITHOUT DISTURBANCE TO THE FINAL SUBGRADE.
57. UNLESS OTHERWISE SPECIFIED, CONTINUE DEWATERING UNINTERRUPTED UNTIL THE STRUCTURES, PIPES, AND APPURTENANCES TO BE BUILT HAVE BEEN PROPERLY INSTALLED. WHERE SUBGRADE MATERIALS ARE UNABLE TO MEET THE SUBGRADE DENSITY REQUIREMENTS DUE TO IMPROPER DEWATERING TECHNIQUES, REMOVE AND REPLACE THE MATERIALS AS DIRECTED BY THE ENGINEER.
58. THE LOCATION OF EXISTING SUBSURFACE ROCK IS NOT KNOWN, IT SHALL BE THE RESPONSIBILITY OF THE CONTRACTOR TO MAKE HIS OWN DETERMINATION AS TO THE LOCATION OF THE SUBSURFACE ROCK. SOIL BORING LOGS ARE INCLUDED AS IN APPENDIX TO THE PROJECT MANUAL.
59. 83. COMPACTION OF BACKFILL MATERIALS SHALL BE IN STRICT ACCORDANCE WITH SECTION 02200 OF THE SPECIFICATIONS AND WILL BE OF MAJOR IMPORTANCE DURING PERFORMANCE OF THE WORK.
60. THE CONTRACTOR IS REQUIRED TO EXCAVATE AND BACKFILL TEST PITS WHEREVER INDICATED ON THE CONTRACT DRAWINGS. FOR ADDITIONAL INFORMATION SEE SPECIFICATION SECTION 02200.
61. CONTRACTOR SHALL PLACE TEMPORARY TRENCH PAVEMENT ONCE PER WEEK OR A MAXIMUM OF EVERY 300 FEET OF TRENCH, TEMPORARY TRENCH PAVEMENT SHALL BE REMOVED AND PERMANENT TRENCH PAVEMENT INSTALLED JUST PRIOR TO COMPLETION OF THE PROJECT. SEE SPECIFICATION SECTION 02525.

UTILITY NOTES:

1. THE LATEST STANDARDS OF THE SPRINGFIELD WATER AND SEWER COMMISSION (SWSC) SHALL BE FOLLOWED WHEN INSTALLING ANY SANITARY SEWER WORK. SEWER WORK WILL BE INSPECTED BY SWSC PERSONNEL AND ALL COSTS SHALL BE THE RESPONSIBILITY OF THE CONTRACTOR.
2. THE LATEST STANDARDS OF THE CITY OF SPRINGFIELD DEPARTMENT OF PUBLIC WORKS (DPW) SHALL BE FOLLOWED WHEN INSTALLING AT STORM DRAIN WORK. STORM DRAIN WORK WILL BE INSPECTED BY CITY OF SPRINGFIELD DPW PERSONNEL AND ALL COSTS SHALL BE THE RESPONSIBILITY OF THE CONTRACTOR.
3. THE LATEST STANDARDS OF THE SPRINGFIELD WATER AND SEWER COMMISSION (SWSC) SHALL BE FOLLOWED WHEN INSTALLING ANY WATER LINE WORK. WATER LINE WORK WILL BE INSPECTED BY SWSC PERSONNEL AND SHALL BE AS DIRECTED BY SWSC INSPECTORS. ALL COSTS SHALL INCLUDE PRESSURE TESTING, DISINFECTING, AND FLUSHING OF LINES. INSPECTION COSTS SHALL BE THE RESPONSIBILITY OF THE CONTRACTOR. THE CONTRACTOR SHALL BE RESPONSIBLE FOR INSTALLATION AND REMOVAL OF ALL NECESSARY DISINFECTING AND FLUSHING TAPS AS DIRECTED BY THE SWSC.
4. THE CONTRACTOR SHALL REFER TO ARCHITECTS & PLUMBING PLANS AND SPECIFICATIONS FOR ACTUAL LOCATION OF ALL ROOF DRAIN LATERALS AND UTILITY ENTRANCES TO INCLUDE SANITARY SEWER LATERALS, DOMESTIC AND FIRE PROTECTION WATER SERVICE, ELECTRIC, TELEPHONE, AND NATURAL GAS SERVICE. THE CONTRACTOR SHALL COORDINATE INSTALLATION OF UTILITIES IN SUCH A MANNER AS TO AVOID CONFLICTS AND COORDINATE WITH THE PROPER AGENCY THE LOCATION AND SCHEDULING OF CONNECTIONS WITH THEIR FACILITIES.
5. WHERE AN EXISTING UTILITY IS FOUND TO CONFLICT WITH THE PROPOSED WORK, THE LOCATION, ELEVATION AND SIZE OF THE UTILITY SHALL BE ACCURATELY DETERMINED WITHOUT DELAY BY THE CONTRACTOR, AND THE INFORMATION FURNISHED TO THE ENGINEER FOR RESOLUTION.
6. ABANDONED EXISTING UTILITIES AND UTILITIES TO BE ABANDONED SHALL EITHER BE ABANDONED IN PLACE AS NOTED OR SHALL BE REMOVED AND DISPOSED OF AS SPECIFIED. ANY UTILITIES 4" OR LARGER TO BE REMOVED. ALL UTILITIES SCHEDULED FOR ABANDONMENT OR REMOVAL AND DISPOSAL MUST BE COORDINATED BY THE CONTRACTOR WITH THE RESPECTIVE UTILITY OWNER. WHEN ABANDONED UTILITIES ARE TO BE LEFT IN PLACE, PLUG OR CAP THE ENDS OF THE CONDUITS AND PIPES. REMOVE ABANDONED UTILITY MANHOLES, JUNCTION BOXES AND SIMILAR STRUCTURES TO A MINIMUM DEPTH OF 4 FEET BELOW FINISHED GRADE AND PUNCTURE OR BREAK THE BOTTOM SLABS OF MANHOLES AND SIMILAR STRUCTURE TO ALLOW DRAINAGE. BACKFILL AND COMPACT EXCAVATIONS RESULTING FROM REMOVAL OF UTILITY FACILITATES, AS REQUIRED TO RESTORE THE ORIGINAL GRADE.
7. THE CONTRACTOR SHALL MAKE ARRANGEMENTS FOR THE ALTERATION AND ADJUSTMENTS OF NATURAL GAS, ELECTRIC, TELEPHONE AND ANY OTHER UTILITY BY THE UTILITY OWNER.
8. THE CONTRACTOR SHALL USE THE FOLLOWING PIPE MATERIALS:
   - SEWER – PVC (POLYVINYL CHLORIDE) SDR 35 FOR PIPE COVER BETWEEN 4-FEET AND 15-FEET UNLESS OTHERWISE NOTED.
   - SEWER – PVC (POLYVINYL CHLORIDE) SDR 26 FOR PIPE COVER BETWEEN 15-FEET AND 30-FEET UNLESS OTHERWISE NOTED.
   - SEWER – C.L.D.I. UNLESS OTHERWISE NOTED.
   - DRAIN – HDPE (HIGH DENSITY CORRUGATED POLYETHYLENE PIPE WITH SMOOTH INNER WALL), ASTM D2321 (UNLESS OTHERWISE SPECIFIED ON PLAN)
   - DRAIN – RCP CLASS IV (REINFORCED CONCRETE PIPE) ALL DRAINAGE PIPES WITHIN THE PUBLIC WAY / CITY EASEMENT SHALL BE RCP UNLESS OTHERWISE NOTED.
   - WATER – C.L.D.I.
9. THE CONTRACTOR SHALL USE THE FOLLOWING MANHOLE SPECIFICATIONS:
   PUBLIC SEWER MANHOLES– NEW PUBLIC MANHOLES SHALL MEET SWSC SPECIFICATIONS WHICH SHALL INCLUDE "SEWER" ON THE COVER AND A SWSC LOGO FRAME AND COVER.
   NEW PUBLIC MANHOLES SHALL BE MINIMUM 5-FEET DIAMETER WITH 32-INCH FRAME AND COVER.
   PRIVATE SEWER MANHOLES – MANHOLES ALONG PRIVATE SANITARY SEWER SERVICES SHALL MEET SWSC SPECIFICATIONS EXCEPT FOR FRAMES AND COVERS WHICH SHALL INCLUDE "SEWER" ON THE COVER, BUT SHALL NOT BE SWSC LOGO FRAMES AND COVERS.
   DRAINAGE MANHOLES SHALL MEET SPRINGFIELD DPW REQUIREMENTS.
10. REFER TO PROPOSED GRADING AND DRAINAGE PLAN, ELECTRIC PLAN AND UTILITY PLAN FOR EXISTING DRAINAGE STRUCTURES AND UTILITY ABANDONMENT.
11. BEFORE WORK BEGINS ON THE SANITARY SEWER OR WATER, THE CONTRACTOR WILL COORDINATE WITH THE SPRINGFIELD WATER AND SEWER COMMISSION (SWSC) TO DETERMINE THE APPROPRIATE PERMIT FEE AND INSPECTION FEE.
12. BEFORE WORK BEGINS ON THE STORM DRAIN, THE CONTRACTOR WILL COORDINATE WITH THE CITY OF SPRINGFIELD DPW TO DETERMINE THE APPROPRIATE PERMIT FEE AND INSPECTION FEE.
13. ALL WATER GATES TO PROPOSED HYDRANTS ARE 6" DIAMETER UNLESS NOTED.
14. ALL UTILITY CONNECTIONS THROUGH THE BUILDING WALL SHALL BE BY MEANS OF FLEXIBLE JOINTS.
15. ALL NEW SANITARY MANHOLES SHALL BE MINIMUM 5-FOOT DIAMETER AND SHALL BE ACCORDING TO SWSC STANDARD DETAILS INCLUDING BRICK INVERTS, UNLESS OTHERWISE NOTED. CONCRETE INVERTS ARE NOT ALLOWED.
16. A MINIMUM OF 10 FEET CLEAR HORIZONTALLY SHALL BE MAINTAINED BETWEEN WATER MAINS AND SANITARY SEWER MAINS AND/OR STORM DRAINS. WHENEVER CONDITIONS PREVENT A LATERAL SEPARATION OF 10 FEET TO A WATER MAIN, THE WATER MAIN SHALL BE LAID IN A SEPARATE TRENCH AND THE DIFFERENCE IN ELEVATION BETWEEN THE WATER MAIN AND THE SEWER MAIN SHALL BE AT LEAST 18 INCHES.
17. ALL FILL MATERIAL IS TO BE IN PLACE, AND COMPACTED BEFORE INSTALLATION OF PROPOSED UTILITIES. ALL MATERIAL SHALL MEET SWSC SPECIFICATION.
18. CONTRACTOR SHALL NOTIFY THE UTILITY AUTHORITY'S INSPECTORS 72 HOURS BEFORE CONNECTING TO ANY EXISTING LINE.
19. MINIMUM TRENCH WIDTH SHALL BE 2 FEET.
20. ALL WATER JOINTS ARE TO BE MECHANICAL JOINTS WITH THRUST BLOCKING, UNLESS OTHERWISE NOTED.
21. CONTRACTOR SHALL MAINTAIN A MINIMUM OF 5'-0" COVER ON ALL WATERLINES AND A MAXIMUM OF 8'-0" COVER.
22. IN THE EVENT OF A VERTICAL CONFLICT BETWEEN WATERLINES, SANITARY LINES, STORM LINES AND GAS LINES (EXISTING AND PROPOSED), THE SANITARY LINE SHALL BE DUCTILE IRON PIPE WITH MECHANICAL JOINTS AT LEAST 10 FEET ON BOTH SIDES OF CROSSING, THE WATERLINE SHALL HAVE MECHANICAL JOINTS WITH APPROPRIATE THRUST BLOCKING AS REQUIRED TO PROVIDE A MINIMUM OF 18" CLEARANCE BETWEEN THE PIPES. WHERE THE WATERLINE IS LESS THAN THE 18" VERTICAL CLEARANCE AND MEETING 10' HORIZONTAL CLEARANCE CANNOT BE MET, THE WATER MUST BE ENCASED IN CONCRETE TO MEET THE REQUIREMENTS OF ANSI A21.10 OR ANSI 21.11 (AWWA C-151) (CLASS 50).
23. ALL CONCRETE FOR ENCASEMENTS SHALL HAVE A MINIMUM 28 DAY COMPRESSION STRENGTH OF 3000 P.S.I.
24. DRAWINGS DO NOT NECESSARILY SHOW ALL EXISTING UTILITIES.
25. CONTRACTOR IS RESPONSIBLE FOR COMPLYING WITH THE SPECIFICATIONS OF THE LOCAL AUTHORITIES WITH REGARDS TO MATERIALS AND INSTALLATION OF THE WATER, SEWER, DRAINAGE, GAS, ELECTRICAL AND TELECOMMUNICATIONS LINES.
26. ALL NECESSARY INSPECTIONS AND/OR CERTIFICATIONS REQUIRED BY CODES AND/OR UTILITY SERVICE COMPANIES SHALL BE PERFORMED PRIOR TO ANNOUNCED BUILDING POSSESSION AND THE FINAL CONNECTION OF SERVICE.
27. ALL HYDRANTS SHALL MEET SPRINGFIELD WATER AND SEWER COMMISSION (SWSC) SPECIFICATION REQUIREMENTS AND SHALL BE INSTALLED IN ACCORDANCE WITH THE SWSC REQUIREMENTS.
28. DOMESTIC WATER SERVICES SHALL BE INSTALLED WITH APPROPRIATELY SIZED GATE, BOX, AND TEE FITTINGS.
29. ALL WATER MAIN APPURTENANCES, MATERIALS, METHODS OF INSTALLATION AND TESTING REQUIREMENTS SHALL MEET OR EXCEED THE SWSC REQUIREMENTS.
30. PRESSURE AND LEAKAGE TEST, DISINFECTION AND FLUSHING SHALL BE IN ACCORDANCE WITH ALL STANDARDS AND REQUIREMENTS.
31. CONTRACTOR SHALL BE RESPONSIBLE FOR ALL COSTS IN CONNECTION WITH THE UTILITY TESTS, FLUSHING AND INSPECTIONS AS REQUIRED.
32. SEWER PIPE BEDDING MATERIAL SHALL BE AS SPECIFIED ON THE DRAWINGS AND SPECIFICATIONS. IF LOCAL OR STATE AUTHORITIES REQUIRE DIFFERENT BEDDING OR BACKFILL MATERIAL, THEN THE MORE STRINGENT SHALL APPLY.

UTILITY NOTES (CONT.):

33. ALL WORK ON WATER AND SANITARY SEWER STRUCTURES SHALL BE BY SWSC APPROVED CONTRACTORS.
34. THE CONTRACTOR SHALL COORDINATE DISRUPTION OF PRIVATE UTILITY SERVICES WITH PROPERTY OWNERS AND TENANTS AT LEAST FORTY EIGHT (48) HOURS PRIOR TO DISRUPTION. ALL UTILITY COORDINATION IS THE RESPONSIBILITY OF THE CONTRACTOR, AT NO COST TO SWSC.
35. SANITARY SEWER LATERALS ARE TO BE REPLACED UP TO THE EDGE OF RIGHT-OF-WAY, UNLESS OTHERWISE SHOWN ON THE PLANS OR DIRECTED BY THE ENGINEER, WITH 6" SDR 35 PVC PIPE FOR EXISTING SEWER LATERALS LARGER THAN 6" THE CONTRACTOR SHALL INSTALL NEW SDR 35 PVC PIPE OF EQUIVALENT SIZE, LOCATION OF SEWER LATERALS ARE APPROXIMATE AND BASED ON AVAILABLE RECORDS AND CCTV DATA. CONTRACTOR SHALL LOCATE AND RECONNECT ALL ACTIVE SEWER AND DRAINAGE LATERALS. THE CONTRACTOR SHALL ASSUME ALL PROPERTIES IN THE VICINITY OF THE WORK HAVE AN ACTIVE SANITARY SEWER LATERAL.
36. INSTALLATION OF THE NEW SEWER MAY REQUIRE THE TEMPORARY REMOVAL OF SEWER SERVICE CONNECTIONS. THE CONTRACTOR IS ADVISED THAT THEY MAY ENCOUNTER SERVICE CONNECTIONS THAT ARE ASBESTOS CEMENT (AC) PIPE. THE CONTRACTOR SHALL BE RESPONSIBLE FOR MAKING ALL NECESSARY ARRANGEMENTS FOR HANDLING AND DISPOSAL OF AC PIPE FOR THE INSTALLATION OF THE NEW SEWER, AT NO ADDITIONAL COST TO THE OWNER.
37. SEWER MANHOLES SHALL BE IN ACCORDANCE WITH SWSC SEWER DETAILS S-02.0 THROUGH S-02.6.
38. PRIOR TO THE START OF CONSTRUCTION, THE CONTRACTOR SHALL COORDINATE WORK WITH ALL UTILITY COMPANIES IN REGARDS TO THEIR BURIED UTILITIES LOCATED IN THE PROJECT AREA. CONTRACTOR SHALL SUPPORT CONDUITS WHEN NECESSARY TO PREVENT DAMAGE. FOR UTILITY COMPANY CONTACT INFORMATION SEE SPECIFICATION SECTION 01010.
39. WHEREVER NEW WATER MAINS OR APPURTENANCES ARE TO JOIN OR BE CONNECTED TO EXISTING PIPE, THE CONTRACTOR SHALL CUT AND REMOVE THE EXISTING PIPE AS NECESSARY TO INSTALL THE NEW WORK. PRIOR TO CONSTRUCTION VERIFY ALL EXISTING SIZES AND MATERIAL TYPES.
40. WHENEVER POSSIBLE THE CONTRACT SHALL BEND THE WATER MAIN AROUND CURVES USING JOINT DEFLECTION.
41. NEW WATER MAINS SHALL BE LAID UNDER EXISTING UTILITIES, DRAINS AND CULVERTS UNLESS OTHERWISE NOTED.
42. ALL FITTINGS AND VALVES SHALL BE RESTRAINED USING MECHANICAL RESTRAINING TYPE GLANDS UNLESS OTHERWISE APPROVED BY THE ENGINEER.
43. A MINIMUM OF ONE FULL PIPE LENGTH OF NEW WATER MAIN (18 FEET) IS TO BE INSTALLED BETWEEN A NEW VALVE AND A COUPLING CONNECTING THE NEW AND EXISTING WATER MAINS.
44. WATER SERVICES SHALL BE REPLACED UP TO THE CURB STOP AT THE PROPERTY LINE UNLESS OTHERWISE NOTED.
45. EXISTING PIPE, HYDRANTS, VALVES, BOXES, AND FITTINGS REMOVED FROM THE WORK SHALL BECOME THE PROPERTY OF THE CONTRACTOR, UNLESS THE SPRINGFIELD WATER AND SEWER COMMISSION DETERMINE THEY ARE SUITABLE FOR REUSE. THE CONTRACTOR SHALL BE RESPONSIBLE FOR REMOVING AND DISPOSING OF ALL SALVAGED MATERIALS.
46. MECHANICALLY RESTRAIN ALL JOINTS AT FITTINGS AND VALVES. INSTALL THRUST COLLAR IN ACCORDANCE WITH SWSC STANDARD DETAILS W-06.6 AND W-06.7. RESTRAIN ALL CONNECTIONS BETWEEN NEW AND EXISTING SYSTEMS.
47. PIPE TRENCH BACKFILLING SHALL CONFORM TO SWSC STANDARD DETAILS W-02.3, W-02.4, W-02.5 AND S_01.0.
48. ONLY SWSC PERSONNEL SHALL OPERATE EXISTING VALVE SHUTDOWNS SHALL BE SCHEDULED AT LEAST FORTY-EIGHT (48) HOURS IN ADVANCE, EXCLUDING WEEKENDS AND HOLIDAYS.
49. FRAMES AND COVERS FOR NEW MANHOLES SHALL BE SET TO MEET FINAL GRADES AS ESTABLISHED BY THE CONTRACTOR IN THE FIELD. SEE SWSC DETAILS S-02.5 THROUGH S-02.8 FOR FRAME AND COVER DETAILS.
50. IF EXISTING ASBESTOS CEMENT PIPE IS ENCOUNTERED AND MUST BE MODIFIED BY THE PROJECT, THE FOLLOWING ACTIONS WILL BE REQUIRED:
    - 50.1. SEWER SERVICES ARE OWNED BY THE PROPERTY OWNER. IF IT IS ASBESTOS CEMENT PIPE, THE OWNER IS RESPONSIBLE TO COMPLY WITH LOCAL, STATE, AND FEDERAL REGULATIONS FOR ITS MODIFICATION OR DISPOSAL.
    - 50.2. IF THE PIPE IS A SEWER MAIN AND OWNED BY SWSC, THE PROJECT WILL BE RESPONSIBLE TO HIRE QUALIFIED AND LICENSED PERSONNEL TO PERFORM WORK ON AND DISPOSAL OF ASBESTOS CONTAINING MATERIALS, AND WILL BE RESPONSIBLE TO FUND THE COMMISSION'S LSP OWNER'S AGENT TO OBSERVE THAT THE ASBESTOS CONTAINING MATERIALS ARE MODIFIED, HANDLED, AND DISPOSED OF IN STRICT COMPLIANCE WITH LOCAL, STATE, AND FEDERAL REGULATIONS.
    - 50.3. IT IS NOT ANTICIPATED, THE PROPOSED WORK WILL INCLUDE MODIFICATION OF EXISTING ASBESTOS CEMENT PIPE SANITARY MAINS.

GRADING & DRAINAGE NOTES:

1. EXISTING PAVEMENT SHALL BE SAW-CUT AND PAVEMENT JOINT SHALL BE INSTALLED WHERE NECESSARY TO ENSURE A SMOOTH CONTINUOUS GRADE.
2. ALL GRADING OPERATIONS SHALL BE COORDINATED WITH THE APPROPRIATE UTILITY COMPANIES.
3. IN LANDSCAPED AREAS THE TOP ELEVATION OF MANHOLES SHALL BE FLUSH WITH FINISH GRADE OF THE LOAM. IN PAVED AREAS THE TOP ELEVATIONS OF MANHOLES SHALL MATCH FINISH GRADE.
4. ALL AREAS DISTURBED DURING CONSTRUCTION SHALL BE STABILIZED AS SOON AS POSSIBLE UPON COMPLETION OF CONSTRUCTION WORK IN THE AREA. REFER TO GRADING AND DRAINAGE PLAN AND LANDSCAPE PLAN.
5. TEMPORARY STRAW BALE PROTECTION AND/OR SILT SACK SHALL BE INSTALLED AND MAINTAINED AT EXISTING DRAINAGE STRUCTURES DURING CONSTRUCTION, TO PRECLUDE SEDIMENT LADEN RUNOFF FROM ENTERING THE DRAINAGE SYSTEM.
6. 5 FOOT DIAMETER OR LARGER DRAIN MANHOLES AND CATCH BASINS MAY BE NECESSARY DURING STORM DRAINAGE INSTALLATION.
7. CONTRACTOR IS RESPONSIBLE FOR DEMOLITION OF EXISTING STRUCTURES INCLUDING REMOVAL OF ANY EXISTING UTILITIES SERVING THE STRUCTURE.
8. ALL CATCH BASINS, MANHOLES, AND WATER QUALITY STRUCTURES TO BE CLEANED OUT PRIOR TO FINAL APPROVAL TO REMOVE ALL CONSTRUCTION SILT AND DEBRIS.
9. IF ANY EXISTING UTILITY STRUCTURES TO REMAIN ARE DAMAGED DURING CONSTRUCTION IT SHALL BE THE CONTRACTOR'S RESPONSIBILITY TO REPAIR AND/OR REPLACE THE EXISTING STRUCTURE AS NECESSARY TO RETURN IT TO EXISTING CONDITIONS OR BETTER AT NO ADDITIONAL COST.
10. ALL STORM PIPE ENTERING STRUCTURES SHALL BE GROUTED TO ASSURE CONNECTION AT STRUCTURE IS WATERTIGHT.
11. ALL STORM DRAIN MANHOLES SHALL HAVE TRAFFIC BEARING RING & COVERS & SHALL BE LABELED "DRAIN".
12. THE CONTRACTOR SHALL ADHERE TO ALL TERMS & CONDITIONS AS OUTLINED IN THE GENERAL N.P.D.E.S. PERMIT FOR STORM WATER DISCHARGE ASSOCIATED WITH CONSTRUCTION ACTIVITIES.
13. CONTRACTOR SHALL ASSURE POSITIVE DRAINAGE AWAY FROM BUILDINGS FOR ALL NATURAL AND PAVED AREAS.
14. ALL UNSURFACED AREAS DISTURBED BY GRADING OPERATION SHALL RECEIVE SIX INCHES (6") OF TOPSOIL. CONTRACTOR SHALL APPLY STABILIZATION FABRIC TO ALL SLOPES 3H:1V OR STEEPER. CONTRACTOR SHALL GRASS DISTURBED AREAS IN ACCORDANCE WITH LANDSCAPE & CIVIL SPECIFICATIONS & DRAWINGS UNTIL A HEALTHY STAND OF GRASS IS OBTAINED.
15. ALL CATCH BASINS SHALL BE EQUIPPED WITH HOODS AND 4-FOOT SUMPS UNLESS OTHERWISE INDICATED BY SPRINGFIELD DPW. DRAINAGE MATERIALS SHALL CONFORM TO LOCAL DRAINAGE REQUIREMENTS.
16. ALL DRAINAGE SHALL CONFORM TO LOCAL REQUIREMENTS.
17. PRECAUTIONS SHALL BE TAKEN TO PROTECT NEW WORK FROM FLOODING DURING STORMS OR FROM OTHER CAUSES, GRADING IN THE AREAS SURROUNDING ALL EXCAVATIONS SHALL BE PROPERLY SLOPED TO PREVENT WATER FROM RUNNING INTO THE EXCAVATED AREA OR TO ADJACENT PROPERTIES. WHERE REQUIRED, TEMPORARY DITCHES SHALL BE PROVIDED FOR DRAINAGE. UPON COMPLETION OF THE WORK AND WHEN DIRECTED BY THE ENGINEER OR OWNER, ALL AREAS SHALL BE RESTORED IN A SATISFACTORY MANNER.

DIG SAFE

BEFORE YOU DIG
CALL 811 OR
1-888-DIG-SAFE
1-888-344-7233

N:\PROJECTS\1839-02\CIVIL\DRAWINGS\CURRENT\C-1839-02 - ABBREVIATIONS & NOTES.DWG

ENGINEER:

ALLEN & MAJOR ASSOCIATES, INC.
civil & structural engineering • land surveying
environmental consulting • landscape architecture
www.allenmajor.com
100 COMMERCE WAY
P.O. BOX 2118
WOBURN MA 01888-0118
TEL: (781) 935-6889
FAX: (781) 935-2896
WOBURN, MA • LAKEVILLE, MA • MANCHESTER, NH

SEAL:

COMMONWEALTH OF MASSACHUSETTS
TIMOTHY J. WILLIAMS
CIVIL
No.43119
REGISTERED PROFESSIONAL ENGINEER
10/23/15

CONSULTANT:

OWNER:

MGM RESORTS INTERNATIONAL
3260 Industrial Road, Las Vegas,NV 89109
702.692.9622 Phone 702.862.1750 Fax

MGM SPRINGFIELD
SPRINGFIELD, MA

PROJECT:
MGM SPRINGFIELD - SITE/CIVIL RECORD

REVISIONS:

NO.	DATE	ISSUE
1	10/23/15	SITE PLAN APPROVAL

THIS DRAWING HAS BEEN PREPARED IN ELECTRONIC FORMAT. CLIENT/CLIENT'S REPRESENTATIVE OR CONSULTANT MAY BE PROVIDED COPIES OF DRAWINGS AND SPECIFICATIONS ON MAGNETIC MEDIA FOR HIS/HER INFORMATION AND USE FOR SPECIFIC APPLICATION TO THIS PROJECT. DUE TO THE POTENTIAL THAT THE MAGNETIC INFORMATION MAY BE MODIFIED UNINTENTIONALLY OR OTHERWISE, ALLEN & MAJOR ASSOCIATES, INC. MAY REMOVE ALL INDICATION OF THE DOCUMENT'S AUTHORSHIP ON THE MAGNETIC MEDIA. PRINTED REPRESENTATIONS OF THE DRAWINGS AND SPECIFICATIONS ISSUED SHALL BE THE ONLY RECORD COPIES OF ALLEN & MAJOR ASSOCIATES, INC.'S WORK PRODUCT.

Copyright 2015 Allen & Major Associates, Inc.
All Rights Reserved

DRAWING TITLE:

ABBREVIATIONS & NOTES

All dimensions, levels, layouts and field conditions shall be verified at the site by the contractor before proceeding with the work.

MRID Project No.		58012MASS
Consultant Project No.		1839-02D
Date:		08/14/2015
Drawn By: KEA	Checked By: TJW	Approved By: TJW
File Name: C1839-02D		

ABB-1

EROSION & SEDIMENTATION CONTROL NOTES:

1. EROSION CONTROL SHALL BE INSTALLED PRIOR TO CONSTRUCTION AND SHALL BE ADEQUATE TO MAINTAIN SEDIMENT ON SITE. ANY MODIFICATIONS TO SILT CONTROLS SHOWN ON THE APPROVED PLANS AS A RESULT OF ACTUAL FIELD CONDITIONS OR CONSTRUCTION PRACTICES SHALL BE INSTALLED IN ACCORDANCE WITH B.M.P. (BEST MANAGEMENT PRACTICES) PER THE E.P.A. 2012 "CONSTRUCTION GENERAL PERMIT" MANUAL, AND MASSACHUSETTS 2003 EROSION & SEDIMENT CONTROL GUIDELINES FOR URBAN AND SUBURBAN AREAS. ANY SUCH MODIFICATIONS FROM THE ABOVE MANUALS SHALL BE INSTALLED AS APPROVED BY THE ENGINEER.
2. AREAS OF EXPOSED SOIL UNDERGOING CONSTRUCTION THAT WILL NOT BE COVERED AND OR FINISHED GRADED SHALL BE STABILIZED AS SOON AS PRACTICABLE BUT IN NO CASE MORE THAN 14 DAYS AFTER THE CONSTRUCTION ACTIVITY (UNLESS THE CITY HAS STRICTER REQUIREMENTS WHICH SHALL BE FOLLOWED) IN THAT PORTION OF THE SITE HAS TEMPORARILY OR PERMANENTLY CEASED. TEMPORARY EROSION CONTROL MEASURES SHALL INCLUDE EROSION CONTROL MESH, NETTING OR MULCH AS DIRECTED BY THE OWNER'S REPRESENTATIVE AND SHOWN ON THE DESIGN PLANS. IF MULCH IS USED, STRAW MULCH SHALL BE APPLIED AT THE RATE OF 4 BALES PER 1,000 SQUARE FEET. APPLICATION AREA SHALL BE SUFFICIENTLY COVERED WITH MULCH TO AVOID ANY VISIBLE SOIL EXPOSURE. MULCH SHALL BE KEPT MOIST TO AVOID LOSS DUE TO WIND. MULCH AND NETTING SHALL BE APPLIED IN THE BASE OF ALL GRASSED WATERWAYS AND IN VEGETATIVE SLOPES WHICH EXCEED 15% AND DISTURBED AREAS WITHIN 100 FEET OF WETLANDS OR STREAMS.
3. IF DISTURBED AREAS DO NOT RECEIVE FINAL SEEDING BY OCTOBER 1ST OF THE CONSTRUCTION YEAR, THEN ALL DISTURBED AREAS SHALL BE SEEDED WITH A WINTER COVER CROP AT THE RATE OF 3 LBS PER 1,000 SQUARE FEET. WINTER SEEDING SHALL BE COVERED WITH EROSION CONTROL MESH (MULCH AND NETTING). HEAVY GRADE MATS SHALL BE USED IN THE BASE OF ALL GRASSED WATERWAYS ON VEGETATED SLOPES IN EXCESS OF 15%, AND ANY DISTURBED AREAS WITHIN 100 FEET OF WETLANDS OR STREAMS. MULCH AND NETTING SHALL ALSO BE PROVIDED FOR ADDITIONAL WINTER PROTECTION.
4. ALL TOPSOIL SHALL BE COLLECTED, STOCKPILED, SEEDED WITH RYE AT 3LBS PER 1,000 SQUARE FOOT AND MULCHED, AND REUSED AS REQUIRED. SILTATION FENCING SHALL BE PLACED DOWN GRADIENT FROM STOCKPILED LOAM. LOAM SHALL BE STOCKPILED AT LOCATIONS DESIGNATED BY THE OWNER AND ENGINEER.
5. ALL FILTER BARRIERS, SILT SACKS, AND EROSION CONTROL BERMS SHALL BE INSTALLED ACCORDING TO THE EROSION CONTROL PLAN. THESE SHALL BE MAINTAINED DURING DEVELOPMENT TO REMOVE SEDIMENT FROM RUNOFF WATER. ALL THE FILTER BARRIERS AND EROSION CONTROL BERMS SHALL BE INSPECTED AFTER ANY RAINFALL OR RUNOFF EVENT, MAINTAINED AND CLEANED UNTIL ALL AREAS HAVE AT LEAST 85–90% VIGOROUS PERENNIAL COVER OF GRASSES.
6. ADJACENT ROADS SHALL BE PERIODICALLY SWEPT OR WASHED TO AVOID TRACKING MUD, DUST OR DEBRIS FROM THE CONSTRUCTION AREA. A WATERING TRUCK WILL BE USED TO PERIODICALLY SPRINKLE CONSTRUCTION AREAS IN ORDER TO KEEP THE LEVEL OF DUST TO A MINIMUM DURING THE DRY MONTHS.
7. THE CONTRACTOR SHALL USE EXTREME CAUTION TO AVOID ALLOWING SEDIMENTS TO ENTER THE STORM DRAIN SYSTEM DURING CONSTRUCTION. CATCH BASIN INLETS SHALL BE PROTECTED DURING CONSTRUCTION BY THE USE OF STRAW BALE BARRIERS AROUND EACH INLET. SILT SACKS SHALL BE INSTALLED IN ALL EXISTING BASINS. INLET PROTECTION MAY BE REMOVED ONLY AFTER FINISHED AREAS ARE PAVED AND THE VEGETATED SLOPES ARE ESTABLISHED WITH AT LEAST 85–90% OF VIGOROUS PERENNIAL GROWTH.
8. AS APPLICABLE, EROSION CONTROL MESH SHALL BE APPLIED IN ACCORDANCE WITH THE PLANS OVER ALL FINISHED SEEDED AREAS AS SPECIFIED ON THE DESIGN PLANS.
9. AT A MINIMUM, ALL STRAW BALE AND FILTER FABRIC SHALL REMAIN IN PLACE UNTIL SEEDINGS HAVE BECOME 85–90% ESTABLISHED. THE CITY OF SPRINGFIELD CONSERVATION COMMISSION MUST APPROVE THE REMOVAL OR RELOCATION OF ANY OF THE STRAW BALES AND FILTER FABRIC.
10. AT THE OWNER'S DISCRETION ADDITIONAL EROSION CONTROL MEASURES MAY BE REQUIRED TO MAINTAIN STABILITY OF EARTHWORKS AND FINISHED GRADED AREAS. THE CONTRACTOR, AT HIS EXPENSE, WILL BE RESPONSIBLE FOR PROVIDING AND INSTALLING ANY ADDITIONAL MEASURES AS SPECIFIED BY THE OWNER. THIS INCLUDES BUT IS NOT LIMITED TO REQUESTS BY MA DEP. THE ENGINEER AND THE MUNICIPALITY, AS AUTHORIZED BY THE OWNER. FAILURE TO COMPLY WITH THE OWNER'S DIRECTIONS WILL RESULT IN DISCONTINUATION OF CONSTRUCTION ACTIVITIES.
11. INSPECTIONS AND MONITORING MAINTENANCE MEASURES SHALL BE APPLIED AS NEEDED DURING THE ENTIRE CONSTRUCTION CYCLE. WEEKLY INSPECTIONS SHALL BE HELD THROUGH THE DURATION OF CONSTRUCTION ACTIVITY. WEEKLY INSPECTION REPORTS SHALL BE MAINTAINED BY THE CONTRACTOR AND LOCATED IN THE CONTRACTORS FIELD OFFICE ONSITE. IN ADDITION TO THE NORMAL WEEKLY INSPECTIONS, THE CONTRACTOR SHALL PERFORM AN INSPECTION OF ALL EROSION CONTROL MEASURES AFTER EACH RAINFALL OR RUNOFF EVENT, AND PERFORM THE NECESSARY REPAIRS. THE INSPECTIONS SHALL INCLUDE BUT NOT BE LIMITED TO THE SITE'S DOWN STREAM DISCHARGE POINTS.
12. IF ANY EVIDENCE OF SEDIMENTATION IS OBSERVED AT THE STORMWATER MANAGEMENT AREA INLETS, THE CONTRACTOR SHALL, AT HIS OWN EXPENSE, PROVIDE A PLAN TO THE ENGINEER TO REMOVE ANY ACCUMULATED SEDIMENT IN THESE AREAS. THE CONTRACTOR SHALL ALSO IMMEDIATELY PROVIDE ADDITIONAL ON SITE EROSION AND SEDIMENTATION CONTROL MEASURES TO PREVENT FURTHER DEGRADATION OF THE AREA.
13. FOLLOWING THE TEMPORARY OR FINAL SEEDINGS, THE CONTRACTOR SHALL INSPECT THE WORK AREA SEMI–MONTHLY TO ENSURE THE AREAS HAVE A MINIMUM OF 85–90% VEGETATED VIGOROUS GROWTH. RE–SEEDING SHALL BE CARRIED OUT BY THE CONTRACTOR WITH FOLLOW UP INSPECTIONS IN THE EVENT OF ANY FAILURES UNTIL VEGETATION IS ADEQUATELY ESTABLISHED.
14. CONTRACTOR & ALL SITE SUBCONTRACTORS SHALL BE FAMILIAR WITH & FOLLOW ALL APPROVED PERMITS AND CONDITIONS. CONTRACTOR SHALL MAINTAIN A COPY OF ALL APPROVED PERMITS ONSITE, INCLUDING THE ORDER OF CONDITIONS FROM THE SPRINGFIELD CONSERVATION COMMISSION. ALL CONDITIONS & RECOMMENDATIONS WITHIN THE APPROVED PERMITS SHALL BE COMPLETED.
15. ALL EROSION MEASURES SHALL BE INSTALLED PRIOR TO CONSTRUCTION AND SHALL BE ADEQUATE TO MAINTAIN SEDIMENT ON SITE. ANY MODIFICATIONS SHALL BE INSTALLED AS DIRECTED BY THE ENGINEER OR THE CITY OF SPRINGFIELD.
16. EROSION AND SEDIMENTATION CONTROL MEASURES SHALL BE MAINTAINED DURING CONSTRUCTION, AND SHALL REMAIN IN PLACE UNTIL ALL SITE WORK IS COMPLETE AND GROUND COVER IS ESTABLISHED.
17. TOP OF STOCKPILES SHALL BE COVERED IN SUCH MANNER THAT STORMWATER DOES NOT INFILTRATE THE MATERIALS AND THEREBY RENDER THE SAME UNSUITABLE FOR FILL USE.
18. ALL DISTURBED OR EXPOSED AREAS SUBJECT TO EROSION SHALL BE STABILIZED WITH MULCH OR SEEDED FOR TEMPORARY VEGETATIVE COVER. NO AREA, SUBJECT TO EROSION SHALL BE LEFT DISTURBED AND UNSTABILIZED FOR PERIODS LONGER THAN IS ABSOLUTELY NECESSARY TO CARRY OUT THAT PORTION OF THE CONSTRUCTION WORK OR SIX MONTHS AFTER SOIL HAS BEEN DISTURBED WHICHEVER IS LESS.
19. CULVERT/PIPE INLETS AND OUTFALLS SHALL BE PROTECTED BY HAYBALE FILTERS AND STONE CHECK DAMS UNTIL DISTURBED AREAS ARE PERMANENTLY STABILIZED.
20. HAYBALE DIKES SHALL BE CONSTRUCTED AT ALL EXISTING & PROPOSED CATCH BASINS. NO SEDIMENTATION SHALL ENTER THE ON–SITE OR OFF–SITE DRAINAGE SYSTEMS AT ANY TIME.
21. ALL EROSION CONTROL MEASURES SHALL BE ROUTINELY INSPECTED BY THE CONTRACTOR, CLEANED AND REPAIRED OR REPLACED AS NECESSARY THROUGHOUT ALL PHASES OF CONSTRUCTION. IN ADDITION, INSPECTIONS AND SHALL TAKE PLACE WEEKLY AND BEFORE AND AFTER EACH RAINFALL EVENT. CONTRACTOR TO PROVIDE ALL WEEKLY REPORTS IN CONJUNCTION WITH THE EROSION CONTROL / NATIONAL POLLUTANT DISCHARGE ELIMINATION SYSTEM CONSTRUCTION SITE PERMIT REQUIREMENTS (NPDES PERMIT) TO OWNER AND ENGINEER ON A WEEKLY BASIS OR MORE FREQUENTLY AS NECESSARY.
22. ALL PROPOSED SLOPES STEEPER THAN 3:1 SHALL BE STABILIZED WITH JUTE MESH AND PROTECTED FROM EROSION UNTIL WORK IS COMPLETE AND GROUND COVER IS ESTABLISHED.
23. THE CONTRACTOR SHALL KEEP ON SITE AT ALL TIMES ADDITIONAL HAYBALES AND EXTRA SILTATION FENCING FOR INSTALLATION AT THE DIRECTION OF THE ENGINEER OR THE CITY ENGINEER TO MITIGATE ANY EMERGENCY CONDITION.

EROSION & SEDIMENTATION CONTROL NOTES (CONTINUED):

24. AS CONSTRUCTION DISTURBANCE IS GREATER THAN 1 ACRE, A NATIONAL POLLUTANT DISCHARGE ELIMINATION SYSTEM (NPDES) CONSTRUCTION GENERAL PERMIT NOI, AND STORM WATER POLLUTION PREVENTION PLAN (SWPPP) WILL NEED TO BE SUBMITTED TO THE EPA. THE NPDES PERMIT FOR STORM WATER DISCHARGE, & CONSTRUCTION GENERAL PERMIT NOI WILL BE REQUIRED TO BE SUBMITTED AT LEAST 14 DAYS PRIOR TO COMMENCING CONSTRUCTION BY THE CONTRACTOR.
25. OWNER AND CONTRACTOR ARE RESPONSIBLE FOR COMPLIANCE WITH THE CONSTRUCTION GENERAL PERMIT NOI. WEEKLY SWPPP INSPECTION REPORTS TO BE PERFORMED BY CONTRACTOR. COPIES OF ALL SWPPP INSPECTION REPORTS SHALL BE PROVIDED TO THE CITY OF SPRINGFIELD, EPA, DEP, OR ANY OTHER AUTHORITY REQUESTING WITHIN 3 DAYS OF EACH INSPECTION.
26. APPLICABLE WORK AND MATERIALS SHALL COMPLY WITH ALL CITY OF SPRINGFIELD, MA DEP, EPA CONSTRUCTION GENERAL PERMIT STANDARDS. ALL CONSTRUCTION SHALL CONFORM TO THE APPLICABLE SITE PLAN REGULATIONS FROM THE CITY OF ACTON AND USDA SOIL CONSERVATION SERVICE VEGETATIVE PRACTICES IN SITE DEVELOPMENT.
27. A WATERING TRUCK SHALL BE USED TO PERIODICALLY SPRINKLE CONSTRUCTION AREAS IN ORDER TO KEEP THE LEVEL OF DUST TO A MINIMUM DURING THE DRY MONTHS AND AS REQUIRED.
28. IF DEWATERING IS NECESSARY IT SHALL ONLY BE COMPLETED AS FOLLOWS: THE DISCHARGE SHALL BE STOPPED IMMEDIATELY IF THE RECEIVING AREA SHOWS ANY SIGN OF INSTABILITY OR EROSION. ALL CHANNELS, SWALES, AND DITCHES DUG FOR DISCHARGING WATER FROM THE EXCAVATED AREA SHALL BE STABLE PRIOR TO DIRECTING DISCHARGE TO THEM. IF A CONSTRUCTION EQUIPMENT BUCKET IS USED, IT SHALL EMPTY THE MATERIAL TO A STABLE AREA. NO DEWATERING SHALL OCCUR DURING PERIODS OF INTENSE, HEAVY RAIN. FLOW TO THE SEDIMENT REMOVAL STRUCTURE SHALL NOT EXCEED THE STRUCTURES CAPACITY TO SETTLE AND FILTER FLOW OR IS VOLUME CAPACITY. WHENEVER POSSIBLE, THE DISCHARGE FROM THE SEDIMENT REMOVAL STRUCTURE SHALL DRAIN TO A WELL–VEGETATED BUFFER BY SHEET FLOW WHILE MAXIMIZING THE DISTANCE TO THE NEAREST WATER RESOURCE AND MINIMIZING THE SLOPE OF THE BUFFER AREA. THERE SHALL BE NO DIRECT DISCHARGE TO EXISTING WETLANDS OR STREAMS. ALL DISCHARGE SHALL BE IN COMPLIANCE WITH STATE, LOCAL, AND FEDERAL REQUIREMENTS.
29. INITIATE STABILIZATION IMMEDIATELY IF CONSTRUCTION WORK TEMPORARILY OR PERMANENTLY CEASES.
30. ALL DISCHARGES FROM POLLUTION SOURCES SUCH AS FUELS, WASTEWATER FROM WASH OUT OF CONCRETE, WASTEWATER FROM CLEAN OUT OF PAINTS, FORM RELEASE OILS, CURING COMPOUND AND OTHER CONSTRUCTION CHEMICALS, POLLUTANT USED FOR MAINTENANCE OF VEHICLES AND EQUIPMENT, SOAPS & SOLVENTS, TOXIC OR HAZARDOUS SUBSTANCES, CHEMICALS AND OILS FROM EQUIPMENT IS PROHIBITED. IF A POLLUTANT IS DISCHARGED IT NEEDS TO BE IMMEDIATELY CLEANED UP BY REMOVING THE CHEMICAL AND AFFECTED SOIL OR AREA OF SPILL FROM THE SITE. DO NOT HOSE DOWN AND SPREAD SPILLED ITEM. ALL CHEMICALS USED ON THE SITE SHALL BE IN LEAK–PROOF CONTAINERS STORED AWAY FROM SURFACE WATERS, STORMWATER INLETS, AND DRAINAGE MEASURES. SPILL KITS SHALL BE AVAILABLE ONSITE FOR EMERGENCY USE. THERE SHALL BE A SECONDARY CONTAINMENT OR ALL CHEMICALS IN ADDITION TO SPILL–PROOF CONTAINERS.
31. PRIOR TO COMMENCEMENT OF CONSTRUCTION, APPLICABLE CONTRACTOR PERSONNEL MUST HAVE AN UNDERSTANDING OF THE EPA CONSTRUCTION GENERAL PERMIT REQUIREMENTS, AND THEIR SPECIFIC RESPONSIBILITIES UNDER THE PERMIT. AT A MINIMUM PERSONNEL MUST BE TRAINED AND UNDERSTAND THE FOLLOWING: LOCATION OF ALL STORMWATER CONTROLS AND HOW TO MAINTAIN THEM, PROCEDURES FOR COMPLYING WITH THE POLLUTION PREVENTION REQUIREMENTS. PROCEDURES FOR CONDUCTING INSPECTIONS, RECORDING FINDINGS, AND TAKING CORRECTIVE ACTION.
32. ALL SEDIMENT TRACKED ONTO ROADWAYS MUST BE REMOVED AT END OF EACH WORK DAY.
33. ALL USE OF CATIONIC TREATMENT CHEMICALS (EXAMPLES INCLUDE POLYMERS, CHITOSAN, CATIONIC PAM, FLOCCULANTS OR OTHER CHEMICAL UTILIZED FOR STABILIZATION) ARE PROHIBITED. IF ALL OTHER AVAILABLE STABILIZATION MEASURES ARE NOT POSSIBLE AND USE OF CATIONIC CHEMICALS IS ABSOLUTELY NECESSARY THE CONTRACTOR WILL NEED TO CONTACT THE EPA NEW ENGLAND OFFICE IN WRITING FOR APPROVAL AND SPECIFIC REQUIREMENTS (MAXIMUM DOSAGE RATE, RESIDUAL TESTING, SPECIFIC LIMITATIONS, ETC) PRIOR TO USE.
34. IF USING NON–VEGETATIVE STABILIZATION MEASURES, IT MUST BE COMPLETED NO LATER THAN 14 DAYS AFTER INITIATING STABILIZATION. ALL AREAS OF EXPOSED SOILS MUST BE COVERED.
35. INSPECTIONS OF EROSION CONTROL MEASURES SHALL BE AT LEAST ONCE EVERY 7 DAYS BY THE CONTRACTOR. AT A MINIMUM INSPECTIONS SHALL INCLUDE ALL DISTURBED AREAS, ALL STORMWATER CONTROLS AND POLLUTION PREVENTION MEASURES, ALL LOCATIONS WHERE STABILIZATION MEASURES HAVE BEEN IMPLEMENTED, EQUIPMENT AND MATERIAL STORAGE AREAS, ALL AREAS WHERE STORMWATER FLOWS AND ALL POINTS OF DISCHARGE. WHEN CORRECTIVE ACTIONS ARE REQUIRED, THE CONTRACTOR MUST IMMEDIATELY TAKE ALL STEPS TO PREVENT POLLUTANT DISCHARGES UNTIL A PERMANENT SOLUTION IS IMPLEMENTED. AS NECESSARY NEW OR MODIFIED CONTROLS MUST BE INSTALLED AND OPERATIONAL, THE REPAIR MUST BE COMPLETED WITHIN 7 DAYS FROM THE TIME OF DISCOVERY. WITHIN 24 HOURS OF A TRIGGERING CONDITION OCCURRING THAT REQUIRES A CORRECTIVE ACTION, A CORRECTIVE ACTION REPORT MUST BE COMPLETED.

MAINTENANCE:

ALL MEASURES STATED ON THE STORMWATER POLLUTION PREVENTION PLANS, SHALL BE MAINTAINED IN FULLY FUNCTIONAL CONDITION BY CONTRACTOR UNTIL NO LONGER REQUIRED FOR A COMPLETED PHASE OF WORK OR FINAL STABILIZATION OF THE SITE. ALL EROSION AND SEDIMENTATION CONTROL MEASURES SHALL BE CHECKED BY A QUALIFIED PERSON IN ACCORDANCE WITH THE CONTRACT DOCUMENTS OR THE APPLICABLE PERMIT, WHICHEVER IS MORE STRINGENT, AND REPAIRED IN ACCORDANCE WITH THE FOLLOWING:

1. INLET PROTECTION DEVICES AND BARRIERS SHALL BE REPAIRED OR REPLACED IF THEY SHOW SIGNS OF UNDERMINING, OR DETERIORATION.
2. ALL SEEDED AREAS SHALL BE CHECKED REGULARLY TO SEE THAT A HEALTHY STAND OF GRASS IS MAINTAINED. AREAS SHOULD BE FERTILIZED, WATERED, AND RESEEDED AS NEEDED.
3. ALL SEDIMENT CONTROLS SHALL BE REPAIRED TO THEIR ORIGINAL CONDITIONS IF DAMAGED. SEDIMENT SHALL BE REMOVED FROM THE TUBULAR SEDIMENT CONTROLS WHEN IT REACHES HALF THE HEIGHT OF THE CONTROL MEASURE OR AS REQUESTED BY THE OWNER OR ENGINEER.
4. THE CONSTRUCTION ENTRANCES SHALL BE MAINTAINED IN A CONDITION WHICH WILL PREVENT TRACKING OR FLOW OF MUD ONTO PUBLIC RIGHTS–OF–WAY. THIS MAY REQUIRE PERIODIC TOP DRESSING OF THE CONSTRUCTION ENTRANCES AS CONDITIONS DEMAND.
5. THE TEMPORARY PARKING AND STORAGE AREA SHALL BE KEPT IN GOOD CONDITION (SUITABLE FOR PARKING AND STORAGE). THIS MAY REQUIRE PERIODIC TOP DRESSING OF THE TEMPORARY PARKING AS CONDITIONS DEMAND.
6. OUTLET STRUCTURES IN THE SEDIMENTATION BASINS SHALL BE MAINTAINED IN OPERATIONAL CONDITIONS AT ALL TIMES. SEDIMENT SHALL BE REMOVED FROM SEDIMENT BASINS OR TRAPS WHEN THE DESIGN CAPACITY HAS BEEN REDUCED BY 50%.

CONSTRUCTION GENERAL PERMIT NOTES AND NARRATIVE:

NARRATIVE: THE STORMWATER POLLUTION PREVENTION PLANS CONSIST OF THE EROSION CONTROL PLANS TOGETHER WITH AN EXISTING CONDITIONS PLANS, GRADING PLANS, ABBREVIATIONS AND NOTES SHEETS, AND DETAIL SHEETS.

THE EROSION CONTROL PLAN WILL BE IMPLEMENTED TO:

A. TREAT EROSION AS SOON AS POSSIBLE AFTER DISTURBANCE.

B. PREVENT SEDIMENT FROM LEAVING THE CONSTRUCTION AREA AND ENTERING THE RECEIVING WATERS.

C. CONSTRUCTION ACTIVITIES SHALL BE SCHEDULED TO MINIMIZE EROSION.

D. ONLY DISTURB, CLEAR, OR GRADE AREAS NECESSARY FOR CONSTRUCTION.

E. PREVENT SEDIMENT FROM ENTERING THE SEWER SYSTEM.

ABBREVIATIONS:

ABAN	ABANDON
AD	AREA DRAIN
ADA	AMERICANS WITH DISABILITIES ACTS
ADJ	ADJUST
B	BORING
BC	BOTTOM OF CURB
BIT	BITUMINOUS
BCB	BITUMINOUS CONCRETE BERM
BLDG	BUILDING
BM	BENCH MARK
BOS	BOTTOM OF SLOPE
BOW	BOTTOM OF WALL
BRK	BRICK
BV&B	BUTTERFLY VALVE & BOX
BVW	BORDERING VEGETATED WETLAND
©	COMPACT PARKING STALL
CATV	CABLE TELEVISION
CB	CATCH BASIN
CF	CUBIC FEET
CFS	CUBIC FEET PER SECOND
CI	CAST IRON (PIPE)
CL	CENTERLINE
CLDI	CEMENT LINED DUCTILE IRON (PIPE)
CLF	CHAIN LINK FENCE
CM	CONSTRUCTION MANAGER
CMP	CORRUGATED METAL PIPE
CO	CLEAN OUT
CONC	CONCRETE
CONST	CONSTRUCTION
CONT	CONTRACTOR
CRD	COORDINATE
CPP	CORRUGATED POLYETHYLENE PIPE
CUL	CULVERT
CY	CUBIC YARD
DB	DISTRIBUTION BOX
DBL	DOUBLE
DEM	DEMOLISH
DET	DETENTION
DI	DUCTILE IRON (PIPE)
DIA	DIAMETER
DIM	DIMENSION
DMH	DRAIN MANHOLE
DW	DOMESTIC WATER (OR DRY WELL)
DWG	DRAWING
DYCL	DOUBLE YELLOW CENTERLINE
EHH	ELECTRIC HANDHOLE
EL	ELEVATION
ELEC	ELECTRIC
EMH	ELECTRIC MANHOLE
EOP	EDGE OF PAVEMENT
EOR	EDGE OF ROAD
EOW	EDGE OF WETLANDS
ETC	ELECTRIC, TELEPHONE, CABLE
EXIST	EXISTING
EXT	EXTERIOR
FA	FIRE ALARM
FCC	FLUSH CONCRETE CURB
FES	FLARED END SECTION
FFE	FINISH FLOOR ELEVATION
FLNP	FIRE LANE NO PARKING
FPS	FEET PER SECOND
FS	FIRE SERVICE
FT	FOOT/FEET
GC	GENERAL CONTRACTOR
GEN	GENERAL
GG	GAS GATE
GR	GUIDE RAIL
GRAN	GRANITE
GV	GATE VALVE
GV&B	GATE VALVE & BOX
GW	GROUND WATER
H	HORIZONTAL
HOR	HORIZONTAL
HT	HEIGHT
HW	HEADWALL
HWY	HIGHWAY
HYD	HYDRANT
ID	INSIDE DIAMETER
IN	INCHES
INCL	INCLUDE
INST	INSTALLED
INV, I.E.	INVERT, INVERT ELEVATION

L	LENGTH
LB	LEACHING BASIN
LP	LIGHT POLE
MAT	MATERIAL
MAX	MAXIMUM
MH	MANHOLE
MIN	MINIMUM
MISC	MISCELLANEOUS
MTD	MOUNTED
MW	MONITORING WELL
N	NORTH
NIC	NOT IN CONTRACT
NO	NUMBER
NTS	NOT TO SCALE
OC	ON CENTER
OD	OUTSIDE DIAMETER
OHW	OVERHEAD WIRE
OVHD	OVERHEAD
OW	OBSERVATION WELL
P	PUMP (DRAIN)
PC	POINT OF CURVATURE
PCC	PRECAST CONCRETE CURB
PI	POINT OF INTERSECTION
PKG	PARKING
PL	PROPERTY LINE
PLMB	PLUMBING
POC	POINT ON CURVATURE
POT	POINT ON TANGENT
PRC	POINT OF REVERSE CURVATURE
PROP, P	PROPOSED
PT	POINT (OR POINT OF TANGENT)
PVC	POLYVINYL CHLORIDE (PIPE)
R&R	REMOVE & RESET/REPLACE
R&S	REMOVE & STACK
RCP	REINFORCED CONCRETE PIPE
RD	ROAD (OR ROOF DRAIN)
RED	REDUCER
RELOC	RELOCATE
REM	REMOVE
RET	RETAIN, RETAINING OR RETENTION
ROW	RIGHT OF WAY
RR	RAILROAD
RWL	RAIN WATER LEADER
RWY	ROADWAY
SD	SUBDRAIN
SF	SQUARE FEET
SF	STORM FILTER (DRAIN)
SGC	SLOPED GRANITE CURB
SMH	SEWER MANHOLE
SP	STANDPIPE
SPEC	SPECIFICATION
STA	STATION
STC	STORMCEPTOR
STD	STANDARD
STRTL	STRUCTURAL
SWEL	SOLID WHITE EDGE LINE
SW	SIDEWALK
SWLL	SOLID WHITE LANE LINE
SWSC	SPRINGFIELD WATER & SEWER COMMISSION
SYCL	SOLID YELLOW CENTERLINE
TB	TEST BORING
TBR	TO BE REMOVED
TC	TOP OF CURB
TD	TRENCH DRAIN
TEL, T	TELEPHONE
TMH	TELEPHONE MANHOLE
TOS	TOP OF SLOPE
TOW	TOP OF WALL
TP	TEST PIT
TS&V	TAPPING SLEEVE & VALVE
TYP	TYPICAL
UD	UNDERDRAIN
UL	UNDERWRITERS LABORATORY
UP	UTILITY POLE
V	VERTICAL
VCP	VITRIFIED CLAY PIPE
VERT	VERTICAL
VGC	VERTICAL GRANITE CURB
WD	WOOD
WG	WATER GATE
WM	WATER MAIN
WMH	WATER MANHOLE
WSO	WATER SHUTOFF
WQ	WATER QUALITY

DIG SAFE

BEFORE YOU DIG
CALL 811 OR
1–888–DIG–SAFE
1–888–344–7233

N:\PROJECTS\1839–02\CIVIL\DRAWINGS\CURRENT\C–1839–02 – ABBREVIATIONS & NOTES.DWG

ENGINEER :

ALLEN & MAJOR ASSOCIATES, INC.
civil & structural engineering • land surveying
environmental consulting • landscape architecture
www.allenmajor.com
100 COMMERCE WAY
P.O. BOX 2118
WOBURN MA 01888-0118
TEL: (781) 935-6889
FAX: (781) 935-2896
WOBURN, MA • LAKEVILLE, MA • MANCHESTER, NH

SEAL:

COMMONWEALTH OF MASSACHUSETTS
TIMOTHY J. WILLIAMS
CIVIL
No.43119
REGISTERED PROFESSIONAL ENGINEER
10/23/15

CONSULTANT:

OWNER :

MGM RESORTS INTERNATIONAL™
3260 Industrial Road, Las Vegas,NV 89109
702.692.9622 Phone 702.862.1750 Fax

MGM SPRINGFIELD
SPRINGFIELD, MA

PROJECT :
MGM SPRINGFIELD - SITE/CIVIL RECORD

REVISIONS :

NO.	DATE	ISSUE
1	10/23/15	SITE PLAN APPROVAL

THIS DRAWING HAS BEEN PREPARED IN ELECTRONIC FORMAT. CLIENT/CLIENT'S REPRESENTATIVE OR CONSULTANT MAY BE PROVIDED COPIES OF DRAWINGS AND SPECIFICATIONS ON MAGNETIC MEDIA FOR HIS/HER INFORMATION AND USE FOR SPECIFIC APPLICATION TO THIS PROJECT. DUE TO THE POTENTIAL THAT THE MAGNETIC INFORMATION MAY BE MODIFIED UNINTENTIONALLY OR OTHERWISE, ALLEN & MAJOR ASSOCIATES, INC. MAY REMOVE ALL INDICATION OF THE DOCUMENT'S AUTHORSHIP ON THE MAGNETIC MEDIA. PRINTED REPRESENTATIONS OF THE DRAWINGS AND SPECIFICATIONS ISSUED SHALL BE THE ONLY RECORD COPIES OF ALLEN & MAJOR ASSOCIATES, INC.'S WORK PRODUCT.

Copyright 2015 Allen & Major Associates, Inc.
All Rights Reserved

DRAWING TITLE :

ABBREVIATIONS & NOTES

All dimensions, levels, layouts and field conditions shall be verified at the site by the contractor before proceeding with the work.

MRID Project No.	58012MASS
Consultant Project No.	1839-02D
Date:	08/14/2015

Drawn By	Checked By	Approved By
KEA	TJW	TJW

File Name: C1839-02D

ABB-2

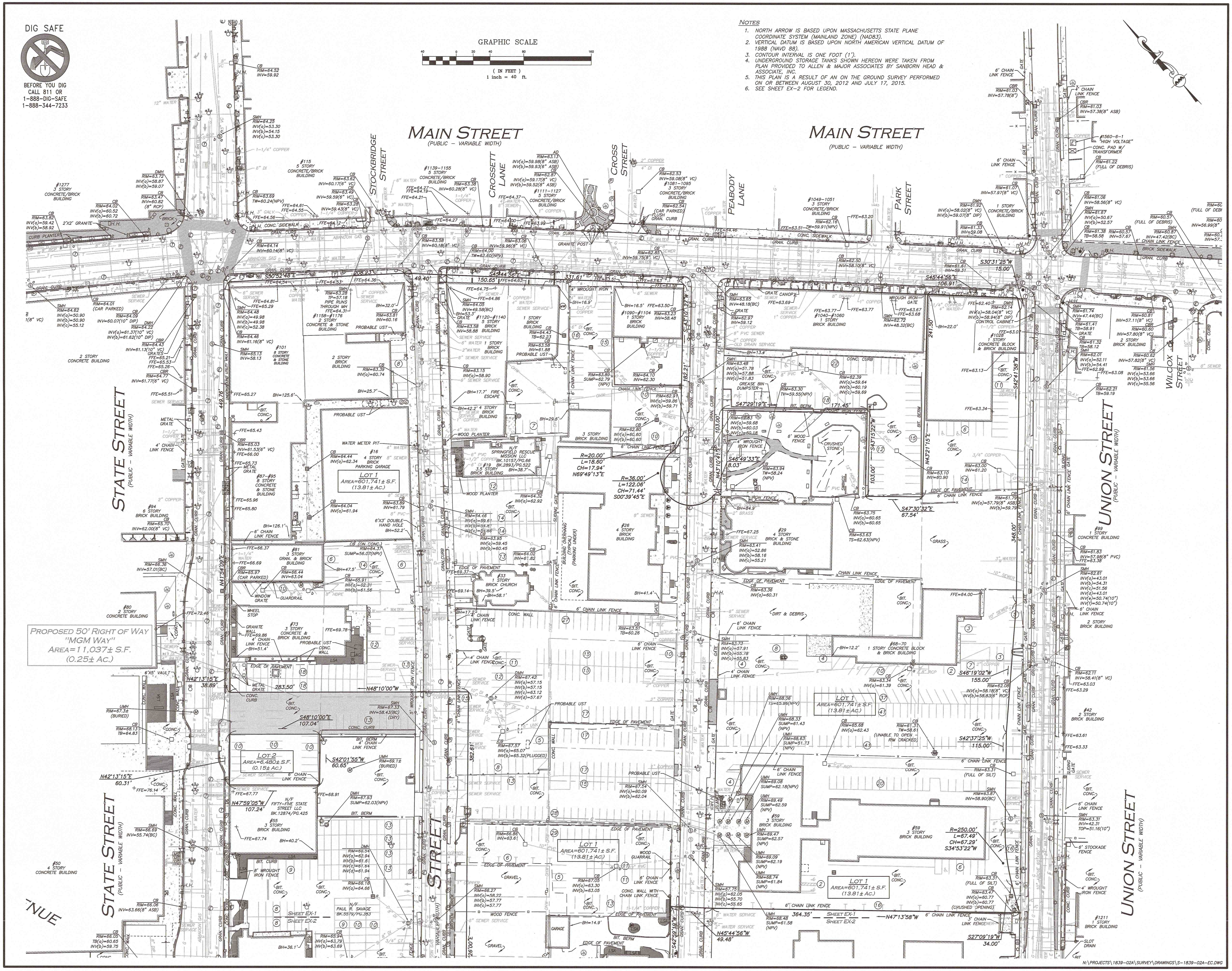

SURVEYOR:

ALLEN & MAJOR ASSOCIATES, INC.
civil & structural engineering ♦ land surveying
environmental consulting ♦ landscape architecture
www.allenmajor.com
100 COMMERCE WAY
P.O. BOX 2118
WOBURN MA 01888-0118
TEL: (781) 935-6889
FAX: (781) 935-2896
WOBURN, MA ♦ LAKEVILLE, MA ♦ MANCHESTER, NH

SEAL:

COMMONWEALTH OF MASSACHUSETTS
KEVIN J. KIERNAN
No.40038
PROFESSIONAL LAND SURVEYOR

CONSULTANT:

OWNER:

MGM RESORTS INTERNATIONAL™
3260 Industrial Road, Las Vegas, NV 89109
702.692.9622 Phone 702.862.1750 Fax

MGM SPRINGFIELD
SPRINGFIELD, MA

PROJECT:
MGM SPRINGFIELD - SITE/CIVIL RECORD

REVISIONS:

NO.	DATE	ISSUE
	05/29/15	

THIS DRAWING HAS BEEN PREPARED IN ELECTRONIC FORMAT. CLIENT/CLIENT'S REPRESENTATIVE OR CONSULTANT MAY BE PROVIDED COPIES OF DRAWINGS AND SPECIFICATIONS ON MAGNETIC MEDIA FOR HIS/HER INFORMATION AND USE FOR SPECIFIC APPLICATION TO THIS PROJECT. DUE TO THE POTENTIAL THAT THE MAGNETIC INFORMATION MAY BE MODIFIED UNINTENTIONALLY OR OTHERWISE, ALLEN & MAJOR ASSOCIATES, INC. MAY REMOVE ALL INDICATION OF THE DOCUMENT'S AUTHORSHIP ON THE MAGNETIC MEDIA. PRINTED REPRESENTATIONS OF THE DRAWINGS AND SPECIFICATIONS ISSUED SHALL BE THE ONLY RECORD COPIES OF ALLEN & MAJOR ASSOCIATES, INC.'S WORK PRODUCT.

Copyright 2015 Allen & Major Associates, Inc.
All Rights Reserved

DRAWING TITLE:

EXISTING CONDITIONS

All dimensions, levels, layouts and field conditions shall be verified at the site by the contractor before proceeding with the work.

MRID Project No.	58012MASS
Consultant Project No.	1839-02A
Date:	08/14/2015

Drawn By	Checked By	Approved By
AJR/COB	KJK	KJK

File Name: S-1839-02A-EC

EX-1

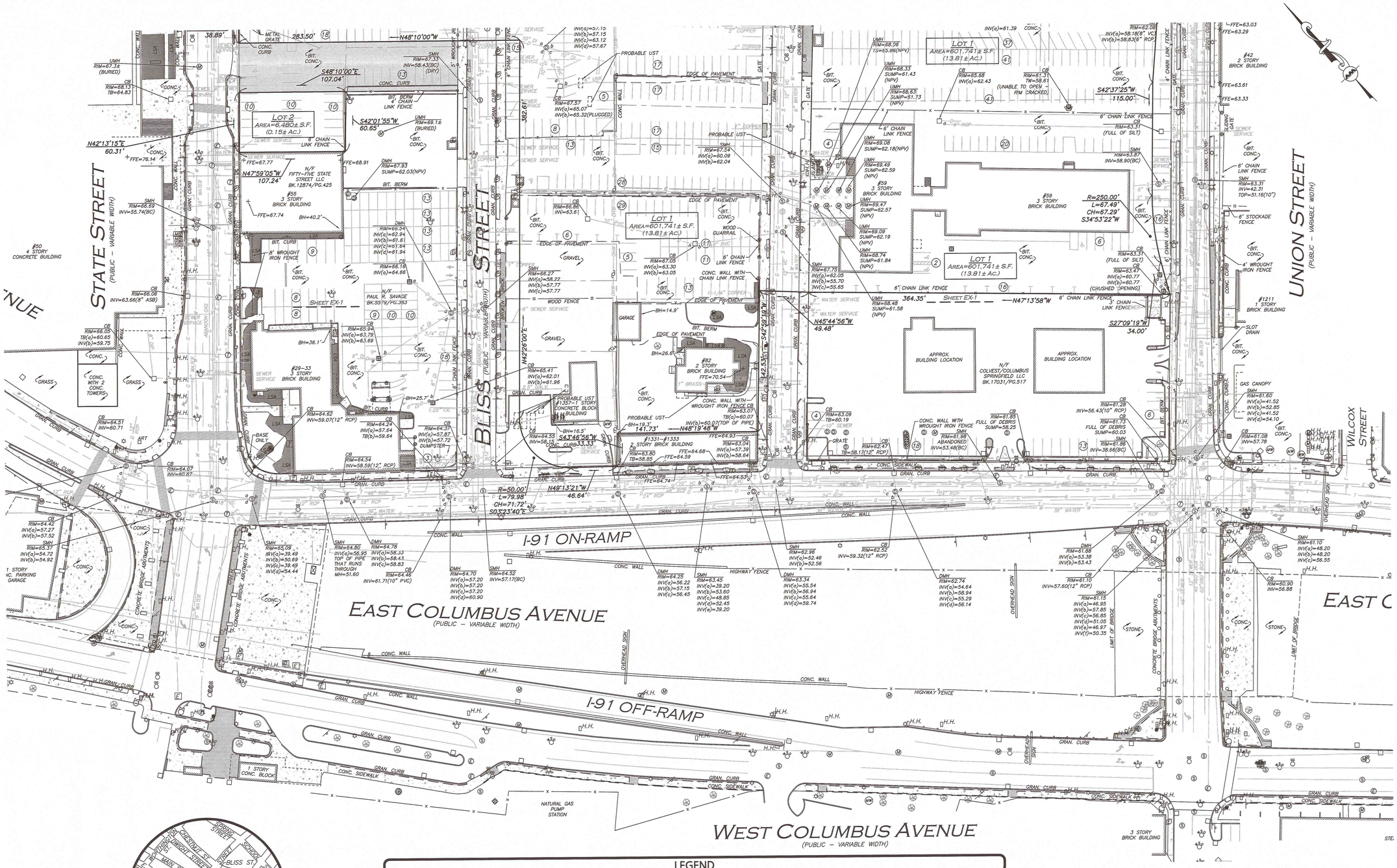

LEGEND

STONE BOUND (SB)		FLOODLIGHT		CONCRETE	
DRAIN MANHOLE (DMH)	D	TREE		LANDSCAPED AREA (LSA)	
SEWER MANHOLE (SMH)	S	BUSH / SHRUB		BRICK	
ELECTRIC MANHOLE (EMH)	E	SIGN		BUILDING	
MISC. MANHOLE (MH)	M	SIGN		BUILDING OVERHANG	
TELEPHONE MANHOLE (TMH)	T	MAILBOX	MB	1' CONTOUR	64
WATER MANHOLE (WMH)	W	TRANSFORMER		5' CONTOUR	65
CABLE MANHOLE (CMH)	C	HANDICAP RAMP		PROPERTY LINE	
CATCH BASIN (CB)		HAND HOLE	H.H.	ABUTTERS LINE	
ROUND CATCH BASIN (RCB)		CABLE BOX	C	TOWN LINE	
UTILITY POLE		TELEPHONE BOX	T	CONCRETE RETAINING WALL	
UTILITY POLE W/RISER		ELECTRIC BOX	E	STONE RETAINING WALL	
UTILITY POLE W/LIGHT		FLAG POLE		EDGE OF PAVEMENT	
FIRE HYDRANT		GAS METER	G	EDGE OF BRICK	
FIRE STANDPIPE		ELECTRIC METER	E	CURB	
WATER SERVICE		PARKING METER	P	CHAIN LINK FENCE	x
WATER GATE		HANDICAPPED PARKING SPACE		STOCKADE FENCE	o
GAS GATE		IRRIGATION CONTROL VALVE		VINYL FENCE	o
BOLLARD		POSITION INDICATOR VALVE		GUARDRAIL	
CLEANOUT		TRAFFIC MAST		SEWER LINE	S
LIGHT		PARKING SPACE COUNT	16	DRAIN LINE	D
TRAFFIC SIGNAL		PAINTED ARROW		GAS LINE	G

WATER LINE	W
ELECTRIC LINE	E
TELEPHONE LINE	T
OVERHEAD WIRES	OHW
BUILDING HEIGHT	BH
BITUMINOUS	BIT.
GRANITE	GRAN.
CONCRETE	CONC.
BOTTOM CENTER	(BC)
ASBESTOS	ASB
REINFORCED CONCRETE PIPE	RCP
POLYVINYL CHLORIDE PIPE	PVC
CAST IRON PIPE	CI
HIGH DENSITY POLYETHYLENE PIPE	HDPE
NO PIPES VISIBLE	NPV
TOP OF WATER	TW
TOP OF STOCKADE	TS
TOP OF BELL	TB
NOW OR FORMERLY	N/F
BOOK	BK.
PAGE	PG.
UNDERGROUND STORAGE TANK	UST

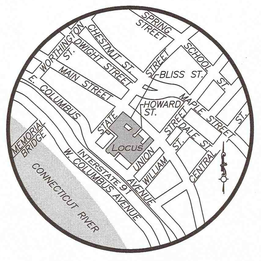

LOCUS MAP
(NOT TO SCALE)

DIG SAFE

BEFORE YOU DIG
CALL 811 OR
1-888-DIG-SAFE
1-888-344-7233

NOTES

1. NORTH ARROW IS BASED UPON MASSACHUSETTS STATE PLANE COORDINATE SYSTEM (MAINLAND ZONE) (NAD83).
2. VERTICAL DATUM IS BASED UPON NORTH AMERICAN VERTICAL DATUM OF 1988 (NAVD88).
3. CONTOUR INTERVAL IS ONE FOOT (1').
4. UNDERGROUND STORAGE TANKS SHOWN HEREON WERE TAKEN FROM PLAN PROVIDED TO ALLEN & MAJOR ASSOCIATES BY SANBORN HEAD & ASSOCIATE, INC.
5. THIS PLAN IS A RESULT OF AN ON THE GROUND SURVEY PERFORMED ON OR BETWEEN AUGUST 30, 2012 AND JULY 17, 2015.

GRAPHIC SCALE

40 0 20 40 80 160

(IN FEET)
1 inch = 40 ft.

N:\PROJECTS\1839-02A\SURVEY\DRAWINGS\S-1839-02A-EC.DWG

SURVEYOR:

ALLEN & MAJOR ASSOCIATES, INC.
100 COMMERCE WAY
WOBURN, MA 01801
TEL (781) 935-1122
FAX (781) 935-2896
WOBURN, MA • EAST FALMOUTH, MA • MANCHESTER, NH

SEAL:

COMMONWEALTH OF MASSACHUSETTS
KEVIN J. KIERNAN
No. 40038
REGISTERED PROFESSIONAL LAND SURVEYOR
KJK 8/14/15

CONSULTANT:

OWNER:

MGM RESORTS INTERNATIONAL
3260 Industrial Road, Las Vegas,NV 89109
702.692.9622 Phone 702.862.1750 Fax

MGM SPRINGFIELD
SPRINGFIELD, MA

PROJECT:
MGM SPRINGFIELD - SITE/CIVIL RECORD

REVISIONS:

NO.	DATE	ISSUE

THIS DRAWING HAS BEEN PREPARED IN ELECTRONIC FORMAT. CLIENT/CLIENT'S REPRESENTATIVE OR CONSULTANT MAY BE PROVIDED COPIES OF DRAWINGS AND SPECIFICATIONS ON MAGNETIC MEDIA FOR CLIENT'S CONVENIENCE AND FOR USE BY CLIENT'S APPLICATION TO THIS PROJECT. DUE TO THE POTENTIAL TIME THE MAGNETIC INFORMATION MAY BE MODIFIED UNINTENTIONALLY OR OTHERWISE, ALLEN & MAJOR ASSOCIATES, INC. MAY REMOVE ALL INDICATION OF THE DOCUMENT'S AUTHORSHIP ON THE MAGNETIC MEDIA. ANY REUSE OF THESE DRAWINGS AND SPECIFICATIONS ISSUED SHALL BE THE ONLY RECORD COPIES OF ALLEN & MAJOR ASSOCIATES, INC.'S WORK PRODUCT.

Copyright 2015 Allen & Major Associates, Inc.
All Rights Reserved

DRAWING TITLE:

EXISTING CONDITIONS

All dimensions, levels, layouts and field conditions shall be verified at the site by the contractor before proceeding with the work.

MRID Project No.	58012MASS
Consultant Project No.	1839-02A
Date:	08/14/2015

Drawn By	Checked By	Approved By
AJR/COB	KJK	KJK

File Name: S-1839-02A-EC

EX-2

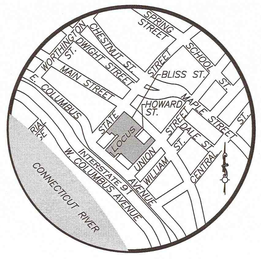

LOCUS MAP
(NOT TO SCALE)

SPRINGFIELD ENGINEERING REFERENCES

- PLAN 17-11
- PLAN 22-29
- PLAN 17-9
- PLAN 433-53
- PLAN 413-3
- PLAN 342-8
- PLAN 412-34
- PLAN 307
- PLAN 308
- PLAN 417-8
- PLAN 164-3
- PLAN 388-3
- PLAN 152-2
- PLAN 136-26
- PLAN 150-23
- PLAN 168-1
- PLAN 163-29
- PLAN 164-25
- PLAN 164-21
- PLAN 149-7
- PLAN 371-9
- FIELD BOOK 4, PAGE 2
- FIELD BOOK 187, PAGE 142
- FIELD BOOK 1, PAGE 7

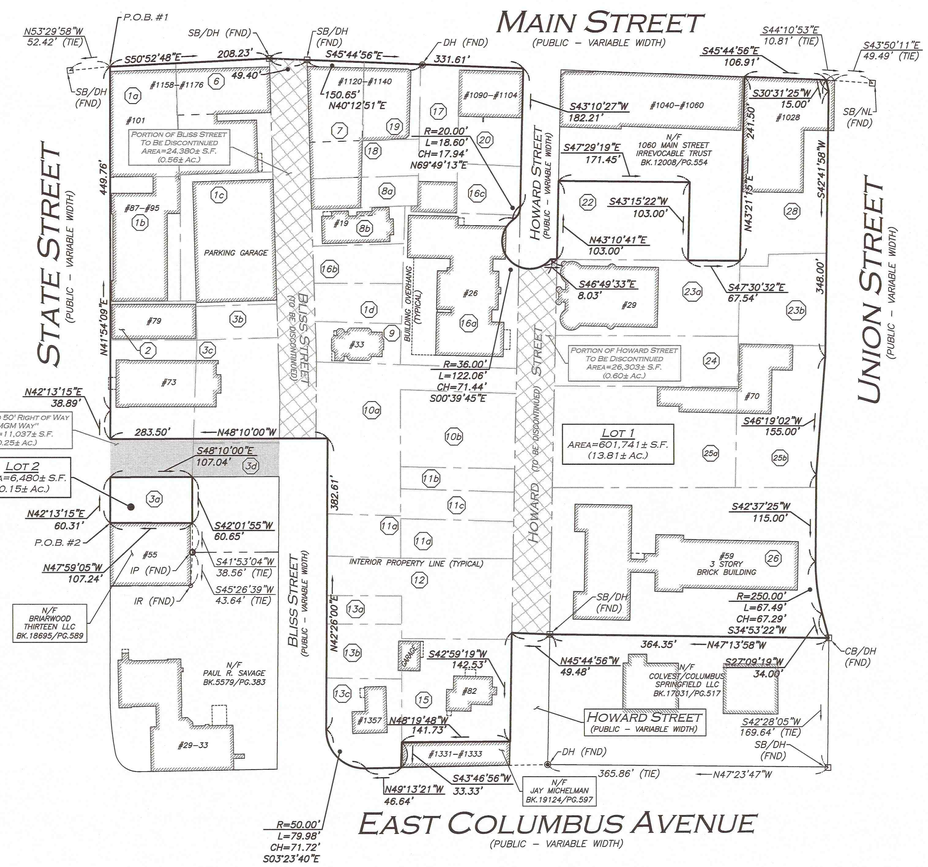

PARCEL OWNERSHIP TABLE

PARCEL	OWNER (N/F)	LEGAL REFERENCE
1 a,b,c & d	BLUE TARP reDEVELOPMENT, LLC	BK.20532/PG.372
2	BLUE TARP reDEVELOPMENT, LLC	BK.20555/PG.512
3 a,b,c & d	BLUE TARP reDEVELOPMENT, LLC	BK.20555/PG.524
6	BLUE TARP reDEVELOPMENT, LLC	BK.20532/PG.364
7	BLUE TARP reDEVELOPMENT, LLC	BK.20555/PG.541
8 a 8 b	SPRINGFIELD RESCUE MISSION INC.	BK.10157/PG.66 BK.2893/PG.522
9	BLUE TARP reDEVELOPMENT, LLC	BK.19648/PG.17
10a & 10b	BLUE TARP reDEVELOPMENT, LLC	BK.20532/PG.379
11a	BLUE TARP reDEVELOPMENT, LLC	BK.20340/PG.57
11 b,c & d	BLUE TARP reDEVELOPMENT, LLC	BK.20555/PG.524
12	BLUE TARP reDEVELOPMENT, LLC	BK.20544/PG.351
13 a,b & c	BLUE TARP reDEVELOPMENT, LLC	BK.20532/PG.386
15	BLUE TARP reDEVELOPMENT, LLC	BK.19468/PG.45
16 a,b & c	BLUE TARP reDEVELOPMENT, LLC	BK.20532/PG.397
17	BLUE TARP reDEVELOPMENT, LLC	BK.20532/PG.391
18	BLUE TARP reDEVELOPMENT, LLC	BK.20555/PG.507
19	BLUE TARP reDEVELOPMENT, LLC	BK.20544/PG.343
20	BLUE TARP reDEVELOPMENT, LLC	BK.20546/PG.453
22	CITY OF SPRINGFIELD	BK.4754/PG.208
23a & 23b	BLUE TARP reDEVELOPMENT, LLC	BK.20371/PG.445
24	BLUE TARP reDEVELOPMENT, LLC	BK.19799/PG.317
25a & 25b	BLUE TARP reDEVELOPMENT, LLC	BK.20407/PG.177
26	BLUE TARP reDEVELOPMENT, LLC	BK.20371/PG.467
28	BLUE TARP reDEVELOPMENT, LLC	BK.20546/PG.450

LEGEND

DRILL HOLE (DH)	◉
STONE BOUND (SB)	⊡
IRON PIPE (IP)	○
IRON ROD (IR)	○
BUILDING	
BUILDING OVERHANG	
PROPERTY LINE	
INTERIOR PROPERTY LINE	
ABUTTERS LINE	
BUILDING HEIGHT	BH
INTERNAL PARCEL NUMBER	(8)
STONE BOUND W/DRILL HOLE	SB/DH
STONE BOUND W/NAIL	SB/NL
CONC. BOUND W/DRILL HOLE	CB/DH
FOUND	FND
NOW OR FORMERLY	N/F
BOOK	BK.
PAGE	PG.
LAND COURT	L.C.
LAND COURT CASE	L.C.C.

PLAN REFERENCES

- PLAN BOOK 16, PLAN 17
- PLAN FILED W/BOOK 2701, PAGE 550
- PLAN BOOK 194, PLANS 10 & 11
- PLAN BOOK 310, PLAN 115
- PLAN BOOK 196, PLAN 20
- PLAN BOOK 24, PLAN 21
- PLAN BOOK 61, PLAN 87
- PLAN BOOK 253, PLAN 32
- PLAN BOOK 216, PLAN 32
- PLAN BOOK 180, PLAN 94
- PLAN BOOK 0, PLAN 66
- PLAN BOOK 342, PLANS 111-121
- PLAN BOOK 17, PLAN 11
- PLAN BOOK 348, PLAN 19
- PLAN BOOK 342, PLAN 77
- PLAN BOOK 186, PLAN 51
- PLAN BOOK 190, PLAN 109
- PLAN BOOK 184, PLAN 35
- PLAN BOOK 182, PLAN 79
- PLAN BOOK 165, PLAN 53
- PLAN BOOK 168, PLAN 100
- PLAN BOOK 208, PLAN 122
- PLAN BOOK 191, PLAN 6
- PLAN BOOK 22, PLAN 62
- PLAN BOOK 82, PLAN 100
- STATE HIGHWAY LAYOUT 5158
- STATE HIGHWAY LAYOUT 5322
- STATE HIGHWAY LAYOUT 5520
- STATE HIGHWAY LAYOUT 5524
- STATE HIGHWAY LAYOUT 5987

NOTES

1. NORTH ARROW IS BASED UPON NORTH AMERICAN DATUM OF 1983 (NAD83 MASSACHUSETTS STATE PLANE COORDINATE SYSTEM.
2. BOOK/PAGE AND PLAN REFERENCES ARE TAKEN FROM THE HAMPDEN COUNTY REGISTRY OF DEEDS IN SPRINGFIELD, MA.
3. THIS PLAN IS A RESULT OF AN ON THE GROUND SURVEY PERFORMED ON OR BETWEEN AUGUST 30, 2012 AND MAY 22, 2015.

GRAPHIC SCALE

40 0 20 40 80 160

(IN FEET)
1 inch = 40 ft.

N:\PROJECTS\1839-02A\SURVEY\DRAWINGS\S-1839-02A-LOCUS-PLOT.DWG

SURVEYOR:

ALLEN & MAJOR ASSOCIATES, INC.
civil engineering ● land surveying
environmental consulting ● landscape architecture
100 COMMERCE WAY
WOBURN, MA 01801
PHONE (781) 935-6889
FAX (781) 935-2896
WOBURN, MA ● PLYMOUTH, MA ● MANCHESTER, NH

SEAL:

COMMONWEALTH OF MASSACHUSETTS
KEVIN J. KIERNAN No. 40038
REGISTERED PROFESSIONAL LAND SURVEYOR
8/14/15

CONSULTANT:

OWNER :

MGM RESORTS INTERNATIONAL
3260 Industrial Road, Las Vegas,NV 89109
702.892.9622 Phone 702.862.1750 Fax

MGM SPRINGFIELD
SPRINGFIELD, MA

PROJECT: MGM SPRINGFIELD - SITE/CIVIL RECORD

REVISIONS :

NO.	DATE	ISSUE

THIS DRAWING HAS BEEN PREPARED IN ELECTRONIC FORMAT. CLIENT/CLIENT'S REPRESENTATIVE OR CONSULTANT MAY BE PROVIDED COPIES OF DRAWINGS AND SPECIFICATIONS OR MAGNETIC MEDIA FOR HELPFUL INFORMATION AND USE FOR SPECIFIC APPLICATION TO THIS PROJECT. DUE TO THE POTENTIAL THAT THE INFORMATION CONTAINED ON MAGNETIC MEDIA MAY BE ALTERED OR OTHERWISE, ALLEN & MAJOR ASSOCIATES, INC. MAY REMOVE ALL INDICATION OF THE DOCUMENT'S AUTHORSHIP ON THE MAGNETIC MEDIA. PRINTED REPRESENTATIONS OF THE DRAWINGS AND SPECIFICATIONS SHALL BE THE ONLY RECORD COPIES OF ALLEN & MAJOR ASSOCIATES, INC.'S WORK PRODUCT.

Copyright 2015 Allen & Major Associates, Inc.
All Rights Reserved

DRAWING TITLE :

PROJECT PROPERTY LINE PLAN

All dimensions, levels, layouts and field conditions shall be verified at the site by the contractor before proceeding with the work.

MRID Project No.	58012MASS
Consultant Project No.	1839-02A
Date:	08/14/2015

Drawn By	Checked By	Approved By
AJR/COB	KJK	KJK

File Name: S-1839-02A-EC

PL-1

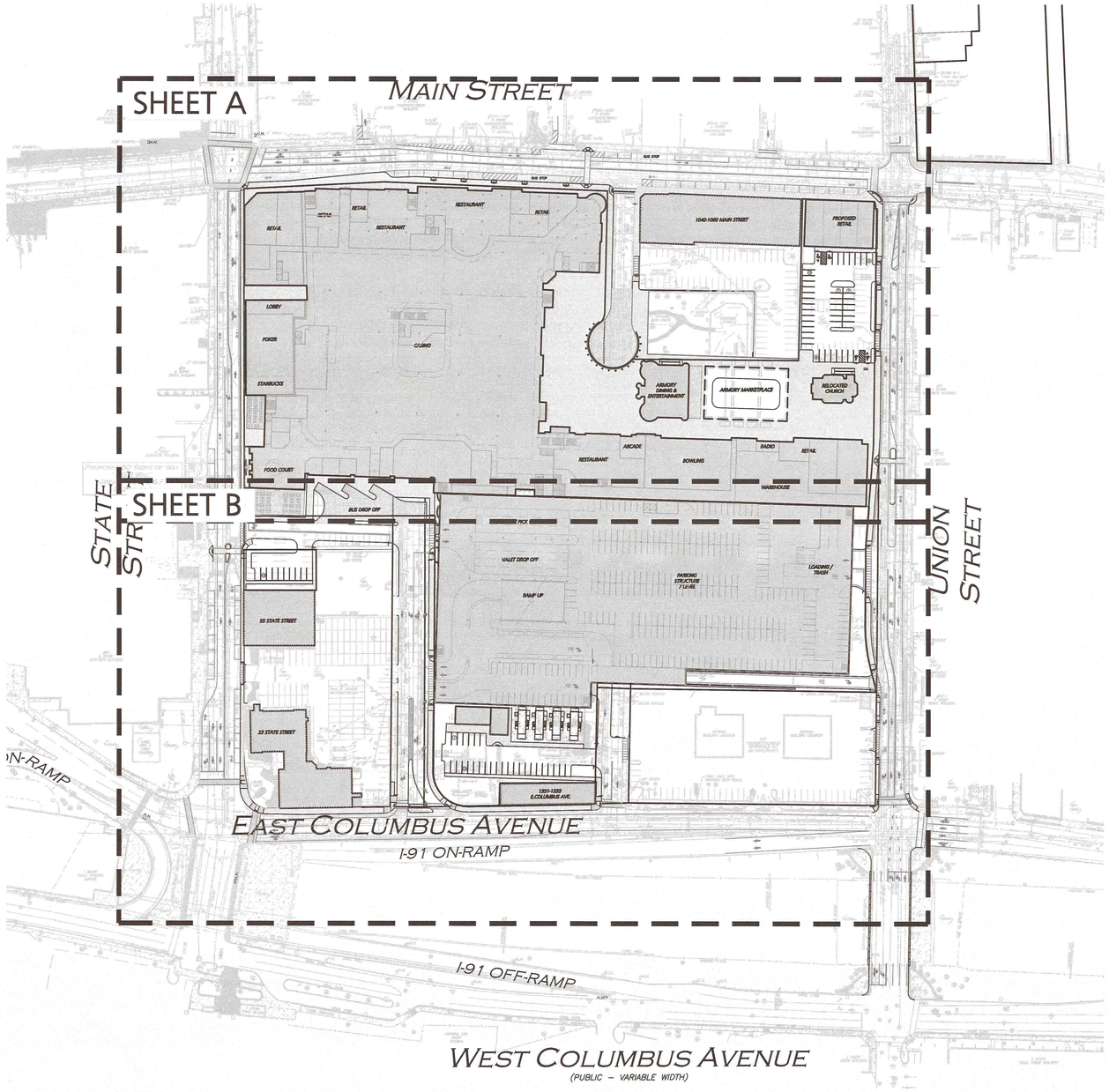

NOTES:

1. THE LOCATIONS OF EXISTING UNDERGROUND UTILITIES ARE SHOWN IN AN APPROXIMATE WAY ONLY AND HAVE NOT BEEN INDEPENDENTLY VERIFIED BY THE OWNER OR IT'S REPRESENTATIVE. THE CONTRACTOR SHALL DETERMINE THE EXACT LOCATION OF ALL EXISTING UTILITIES BEFORE COMMENCING WORK, AND AGREES TO BE FULLY RESPONSIBLE FOR ANY AND ALL DAMAGES WHICH MIGHT BE OCCASIONED BY THE CONTRACTOR'S FAILURE TO EXACTLY LOCATE AND PRESERVE ANY AND ALL UNDERGROUND UTILITIES.
2. THE EXISTING CONDITIONS IS TAKEN FROM AN EXISTING CONDITIONS PLAN PREPARED FOR BLUE TARP REDEVELOPMENT, LLC PREPARED BY ALLEN & MAJOR ASSOCIATES, INC.
3. ALL ELEVATIONS REFER TO NAVD 88.
4. ALL RADII SHALL BE 3' UNLESS OTHERWISE NOTED.
5. ALL PROPOSED CURBING TO BE VERTICAL GRANITE CURBING UNLESS OTHERWISE NOTED.
6. THE INFORMATION SHOWN ON THIS PLAN IS THE SOLE PROPERTY OF ALLEN & MAJOR ASSOCIATES, INC. IT'S INTENDED USE IS TO PROVIDE INFORMATION. ANY ALTERATION, MISUSE, OR RECALCULATION OF INFORMATION OR DATA WITHOUT THE EXPRESSED, WRITTEN CONSENT OF ALLEN & MAJOR ASSOCIATES, INC. IS STRICTLY PROHIBITED.

PARKING NOTES:

1. THE CASINO OVERLAY DISTRICT (COD) SHALL MEET THE OFF-SITE PARKING PROVISIONS STIPULATED IN THE HOST COMMUNITY AGREEMENT (HCA).

LEGEND:

- SIGN
- BOLLARD
- SETBACK LINE
- GARAGE FOOTPRINT
- BUILDING OVERHANG
- BUILDING ARCHITECTURE
- CURB (MATERIAL PER PLAN)
- RETAINING WALL
- PARKING STRIPING
- ROADWAY STRIPING
- TRAFFIC ARROWS
- HEAVY DUTY CONCRETE
- CONCRETE SIDEWALK
- BRICK SIDEWALK
- ADA ACCESSIBLE RAMP
- ADA DET. WARNING SURFACE
- SNOW STORAGE
- STONE AREA
- COMPACT SPACE (C)
- PARKING COUNT (10)
- GUARDRAIL
- CHAIN LINK FENCE
- DECORATIVE FENCE
- BIKE RACK

OFF-STREET PARKING SUMMARY

USE: (TABLE 7.1 – PRESUMPTIVE REQUIRED OFF-STREET PARKING:

LODGING SHALL HAVE (0.75) SPACES PER ROOM.
- (251 ROOMS) * (0.75) = 189 SPACES REQUIRED

RETAIL SHALL HAVE FOUR (4) SPACES FOR EACH ONE THOUSAND (1,000) SQUARE FEET OF NET FLOOR AREA.
- (31,250 SF) / (1,000 SF) * 4 = 125 SPACES REQUIRED

RESTAURANTS SHALL HAVE EIGHT (8) SPACES FOR EACH ONE THOUSAND (1,000) SQUARE FEET OF NET FLOOR AREA.
- (53,728 SF) / (1,000 SF) * 8 = 430 SPACES REQUIRED

CINEMAS SHALL HAVE ONE (1) SPACE PER SIX (6) SEATS.
- (750 SEATS) / 6 = 125 SPACES REQUIRED

DAY CARE SHALL HAVE TWO (2) SPACES PER SEVEN HUNDRED (700) SQUARE FEET OF NET FLOOR AREA.
- (6,000 SF) / (700 SF) * 2 = 18 SPACES REQUIRED

WAREHOUSE SHALL HAVE ONE (0.5) SPACES FOR EACH ONE THOUSAND (1,000) SQUARE FEET OF NET FLOOR AREA.
- (189,968 SF) / (1,000 SF) * 0.5 = 95 SPACES REQUIRED

CONVENTION HALL SHALL HAVE THREE (3) SPACES PER ONE THOUSAND (1,000) SQUARE FEET OF NET FLOOR AREA.
- (29,128 SF) / (1,000 SF) * 3 = 88 SPACES REQUIRED

CASINO SHALL HAVE THREE (3) SPACES PER ONE THOUSAND (1,000) SQUARE FEET OF NET FLOOR AREA.
- (126,262 SF) / (1,000 SF) * 3 = 379 SPACES REQUIRED

BOWLING SHALL HAVE THREE (3) SPACES PER ONE THOUSAND (1,000) SQUARE FEET OF NET FLOOR AREA.
- (9,501 SF) / (1,000 SF) * 3 = 29 SPACES REQUIRED

HOUSES OF WORSHIP SHALL HAVE ONE (1) SPACES FIVE (5) SEATS.
- (200 SEATS) / 5 = 40 SPACES REQUIRED

FITNESS/SPA SHALL HAVE THREE (3) SPACES PER ONE THOUSAND (1,000) SQUARE FEET OF NET FLOOR AREA.
- (5,955 SF) / (1,000 SF) * 3 = 18 SPACES REQUIRED

TOTAL SPACES REQUIRED = 1,536 (26 ACCESSIBLE)

	STANDARD PROVIDED	COMPACT PROVIDED	ACCESSIBLE PROVIDED	TOTAL PROVIDED
GARAGE PARKING	3,375	TBD	TBD	3,375
SURFACE PARKING	86	TBD	4	86
TOTAL PROVIDED	3,461	TBD	TBD	3,461

PARKING NOTE:
THE CASINO OVERLAY DISTRICT SHALL MEET THE OFF-SITE PARKING PROVISIONS STIPULATED IN THE HOST COMMUNITY AGREEMENT (HCA).

LAND USAGE TABLE - CASINO OVERLAY (COD)

ITEM	PROPOSED	REQUIRED/ALLOWED
LOT AREA	590,574 S.F. 13.56 ACRES	N/A
LOT FRONTAGE	646± FEET (MAIN STREET)	N/A
LOT WIDTH	646± FEET (MAIN STREET)	N/A
BUILDING COVERAGE	435,334± 74%	95%
FRONT YARD	2.9 FEET	0 FEET MIN. 10 FEET MAX.
SIDE YARD	0 FEET	0 FEET MIN.
REAR YARD	0 FEET	0 FEET MIN.
BUILDING HEIGHT	23 STORIES 317± FEET	N/A STORIES 400 FEET

DIG SAFE

BEFORE YOU DIG CALL 811 OR 1-888-DIG-SAFE 1-888-344-7233

GRAPHIC SCALE

80 0 40 80 160 320

(IN FEET)
1 inch = 80 ft.

N:\PROJECTS\1839-02\CIVIL\DRAWINGS\CURRENT\C-1839-02 - LAYOUT.DWG

ENGINEER:

ALLEN & MAJOR ASSOCIATES, INC.
civil & structural engineering • land surveying
www.allenmajor.com
100 COMMERCE WAY
WOBURN, MA 01801-4118
TEL: (781) 935-6889
FAX: (781) 935-2896
WOBURN, MA • LAKEVILLE, MA • MANCHESTER, NH

SEAL:

COMMONWEALTH OF MASSACHUSETTS
TIMOTHY J. WILLIAMS
CIVIL
No. 43119
REGISTERED PROFESSIONAL ENGINEER
10/23/15

CONSULTANT:

OWNER:

MGM RESORTS INTERNATIONAL
3280 Industrial Road, Las Vegas,NV 89109
702.692.9622 Phone 702.862.1750 Fax

MGM SPRINGFIELD
SPRINGFIELD, MA

PROJECT:
MGM SPRINGFIELD - SITE/CIVIL RECORD

REVISIONS:

NO.	DATE	ISSUE
1	10/23/15	SITE PLAN APPROVAL

THIS DRAWING HAS BEEN PREPARED IN ELECTRONIC FORMAT. CLIENT/CLIENT'S REPRESENTATIVE OR CONSULTANT MAY BE PROVIDED COPIES OF DRAWINGS AND SPECIFICATIONS ON MAGNETIC MEDIA FOR HELPFUL INFORMATION AND USE FOR SPECIFIC APPLICATIONS. IN THE EVENT OF ANY DISCREPANCY THAT THE MAGNETIC INFORMATION MAY BE ALTERED UNINTENTIONALLY OR OTHERWISE, ALLEN & MAJOR ASSOCIATES, INC. MAY REMOVE ALL INDICATION OF THE DOCUMENT'S AUTHORSHIP ON THE MAGNETIC MEDIA. PRINTED REPRESENTATIONS OF THE DRAWINGS AND SPECIFICATIONS SIGNED SHALL BE THE ONLY RECORD COPIES OF ALLEN & MAJOR ASSOCIATES, INC.'S WORK PRODUCT.

Copyright 2015 Allen & Major Associates, Inc.
All Rights Reserved

DRAWING TITLE:

PROPOSED OVERALL LAYOUT PLAN

All dimensions, levels, layouts and field conditions shall be verified at the site by the contractor before proceeding with the work.

MRID Project No.	58012MASS
Consultant Project No.	1839-02D
Date:	08/14/2015

Drawn By	Checked By	Approved By
KEA	TJW	TJW

File Name: C1839-02D

C-1

OFF-STREET PARKING SUMMARY

USE: (TABLE 7.1 – PRESUMPTIVE REQUIRED OFF-STREET PARKING:

LODGING SHALL HAVE (0.75) SPACES PER ROOM.
- (251 ROOMS) * (0.75) = 189 SPACES REQUIRED

RETAIL SHALL HAVE FOUR (4) SPACES FOR EACH ONE THOUSAND (1,000) SQUARE FEET OF NET FLOOR AREA.
- (31,250 SF) / (1,000 SF) * 4 = 125 SPACES REQUIRED

RESTAURANTS SHALL HAVE EIGHT (8) SPACES FOR EACH ONE THOUSAND (1,000) SQUARE FEET OF NET FLOOR AREA.
- (53,728 SF) / (1,000 SF) * 8 = 430 SPACES REQUIRED

CINEMAS SHALL HAVE ONE (1) SPACE PER SIX (6) SEATS.
- (750 SEATS) / 6 = 125 SPACES REQUIRED

DAY CARE SHALL HAVE TWO (2) SPACES PER SEVEN HUNDRED (700) SQUARE FEET OF NET FLOOR AREA.
- (6,000 SF) / (700 SF) * 2 = 18 SPACES REQUIRED

WAREHOUSE SHALL HAVE ONE (0.5) SPACES FOR EACH ONE THOUSAND (1,000) SQUARE FEET OF NET FLOOR AREA.
- (189,968 SF) / (1,000 SF) * 0.5 = 95 SPACES REQUIRED

CONVENTION HALL SHALL HAVE THREE (3) SPACES PER ONE THOUSAND (1,000) SQUARE FEET OF NET FLOOR AREA.
- (29,128 SF) / (1,000 SF) * 3 = 88 SPACES REQUIRED

CASINO SHALL HAVE THREE (3) SPACES PER ONE THOUSAND (1,000) SQUARE FEET OF NET FLOOR AREA.
- (126,262 SF) / (1,000 SF) * 3 = 379 SPACES REQUIRED

BOWLING SHALL HAVE THREE (3) SPACES PER ONE THOUSAND (1,000) SQUARE FEET OF NET FLOOR AREA.
- (9,501 SF) / (1,000 SF) * 3 = 29 SPACES REQUIRED

HOUSES OF WORSHIP SHALL HAVE ONE (1) SPACES FIVE (5) SEATS.
- (200 SEATS) / 5 = 40 SPACES REQUIRED

FITNESS/SPA SHALL HAVE THREE (3) SPACES PER ONE THOUSAND (1,000) SQUARE FEET OF NET FLOOR AREA.
- (5,955 SF) / (1,000 SF) * 3 = 18 SPACES REQUIRED

TOTAL SPACES REQUIRED = 1,536 (26 ACCESSIBLE)

	STANDARD PROVIDED	COMPACT PROVIDED	ACCESSIBLE PROVIDED	TOTAL PROVIDED
GARAGE PARKING	3,375	TBD	TBD	3,375
SURFACE PARKING	86	TBD	4	86
TOTAL PROVIDED	3,461	TBD	TBD	3,461

LAND USAGE TABLE - CASINO OVERLAY (COD)

ITEM	PROPOSED	REQUIRED/ALLOWED
LOT AREA	590,574 S.F. 13.56 ACRES	N/A
LOT FRONTAGE	646± FEET (MAIN STREET)	N/A
LOT WIDTH	646± FEET (MAIN STREET)	N/A
BUILDING COVERAGE	435,334± 74%	95%
FRONT YARD	2.9 FEET	0 FEET MIN. 10 FEET MAX.
SIDE YARD	0 FEET	0 FEET MIN.
REAR YARD	0 FEET	0 FEET MIN.
BUILDING HEIGHT	23 STORIES 317± FEET	N/A STORIES 400 FEET

NOTES:

1. THE LOCATIONS OF EXISTING UNDERGROUND UTILITIES ARE SHOWN IN AN APPROXIMATE WAY ONLY AND HAVE NOT BEEN INDEPENDENTLY VERIFIED BY THE OWNER OR IT'S REPRESENTATIVE. THE CONTRACTOR SHALL DETERMINE THE EXACT LOCATION OF ALL EXISTING UTILITIES BEFORE COMMENCING WORK, AND AGREES TO BE FULLY RESPONSIBLE FOR ANY AND ALL DAMAGES WHICH MIGHT BE OCCASIONED BY THE CONTRACTOR'S FAILURE TO EXACTLY LOCATE AND PRESERVE ANY AND ALL UNDERGROUND UTILITIES.
2. THE EXISTING CONDITIONS IS TAKEN FROM AN EXISTING CONDITIONS PLAN PREPARED FOR BLUE TARP REDEVELOPMENT, LLC PREPARED BY ALLEN & MAJOR ASSOCIATES.
3. ALL ELEVATIONS REFER TO NAVD 88.
4. ALL RADII SHALL BE 3' UNLESS OTHERWISE NOTED.
5. THE INFORMATION SHOWN ON THIS PLAN IS THE SOLE PROPERTY OF ALLEN & MAJOR ASSOCIATES, INC. IT'S INTENDED USE IS TO PROVIDE INFORMATION. ANY ALTERATION, MISUSE, OR RECALCULATION OF INFORMATION OR DATA WITHOUT THE EXPRESSED, WRITTEN CONSENT OF ALLEN & MAJOR ASSOCIATES, INC. IS STRICTLY PROHIBITED.

PARKING NOTES:
1. THE CASINO OVERLAY DISTRICT (COD) SHALL MEET THE OFF-SITE PARKING PROVISIONS STIPULATED IN THE HOST COMMUNITY AGREEMENT (HCA).

LEGEND:

- SIGN
- BOLLARD
- SETBACK LINE
- GARAGE FOOTPRINT
- BUILDING OVERHANG
- BUILDING ARCHITECTURE
- CURB (MATERIAL PER PLAN)
- RETAINING WALL
- PARKING STRIPING
- ROADWAY STRIPING
- TRAFFIC ARROWS
- HEAVY DUTY CONCRETE
- CONCRETE SIDEWALK
- BRICK SIDEWALK
- ADA ACCESSIBLE RAMP
- ADA DET. WARNING SURFACE
- SNOW STORAGE
- STONE AREA
- COMPACT SPACE
- PARKING COUNT
- GUARDRAIL
- CHAIN LINK FENCE
- DECORATIVE FENCE
- BIKE RACK
- VGC — PROPOSED VERTICAL GRANITE CURBING
- EGC — EXISTING GRANITE CURBING

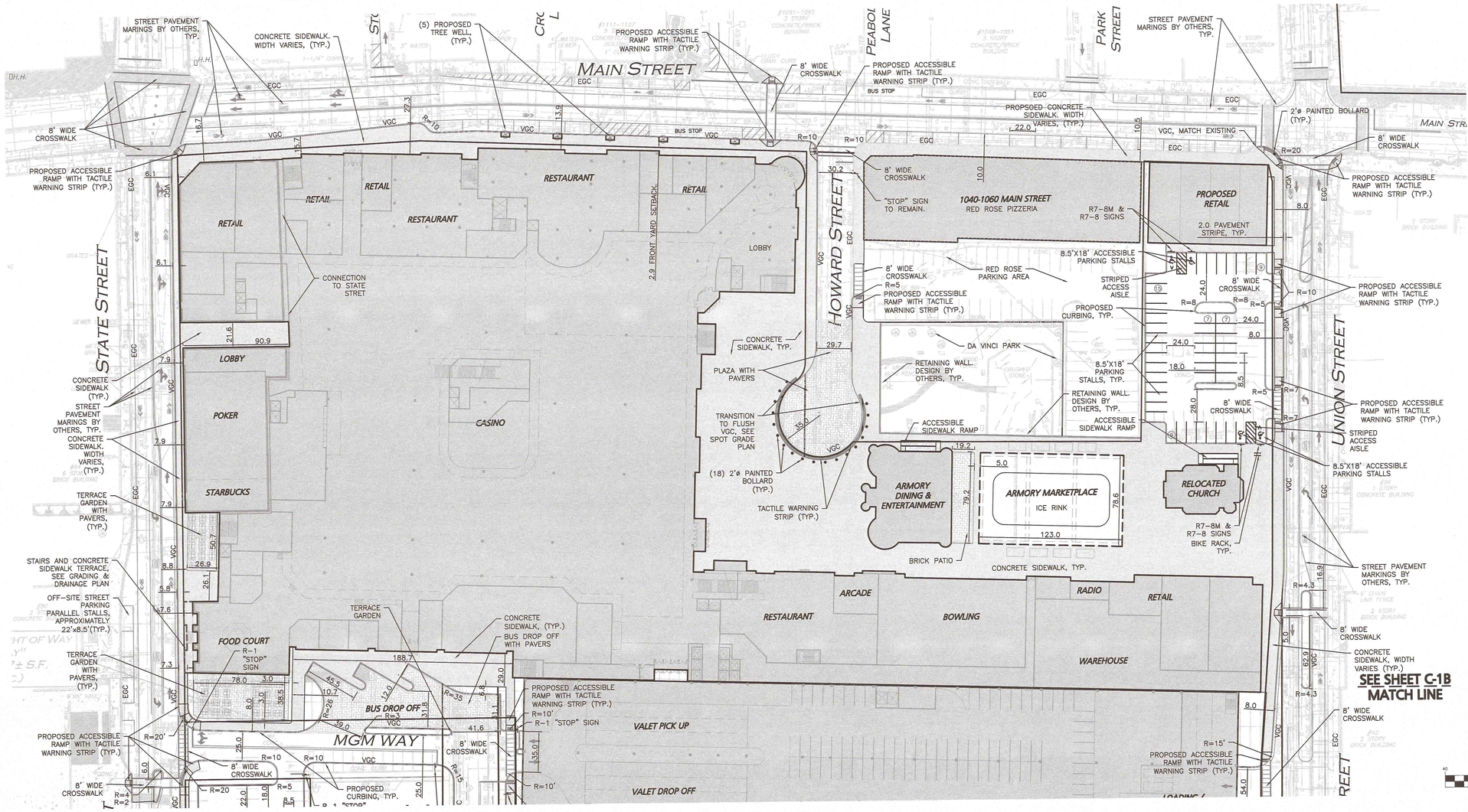

DIG SAFE

BEFORE YOU DIG CALL 811 OR 1-888-DIG-SAFE 1-888-344-7233

GRAPHIC SCALE

40 0 20 40 80 160

(IN FEET)
1 inch = 40 ft.

N:\PROJECTS\1839-02\CIVIL\DRAWINGS\CURRENT\C-1839-02 - LAYOUT.DWG

ENGINEER :

ALLEN & MAJOR ASSOCIATES, INC.
CIVIL & STRUCTURAL ENGINEERING • LAND SURVEYING
TRANSPORTATION PLANNING • LANDSCAPE ARCHITECTURE
100 GRANITE STREET, SUITE 1
P.O. BOX 5115
WORCESTER, MA 01615-0115
TEL: (781) 935-6889
WWW.ALLENMAJOR.COM
WORCESTER, MA • LAKEVILLE, MA • MANCHESTER, NH

SEAL:

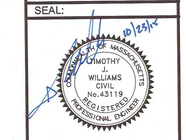

CONSULTANT:

OWNER :

MGM RESORTS INTERNATIONAL
3260 Industrial Road, Las Vegas,NV 89109
702.692.9622 Phone 702.892.1750 Fax

MGM SPRINGFIELD
SPRINGFIELD, MA

PROJECT: MGM SPRINGFIELD - SITE/CIVIL RECORD

REVISIONS :

NO.	DATE	ISSUE
1	10/23/15	SITE PLAN APPROVAL

THIS DRAWING HAS BEEN PREPARED IN ELECTRONIC FORMAT. CLIENT/CLIENT'S REPRESENTATIVES ARE ADVISED TO REVIEW THE HARD COPY DRAWINGS AND SPECIFICATIONS OR MAGNETIC MEDIA FOR HIS/HER INFORMATION AND USE FOR SPECIFIC APPLICATION TO THIS PROJECT, DUE TO THE POTENTIAL THAT THE MAGNETIC INFORMATION MAY BE MODIFIED UNINTENTIONALLY OR WITHOUT THE KNOWLEDGE OF THE PROFESSIONAL, ALLEN & MAJOR ASSOCIATES, INC. RESERVES THE RIGHT TO REMOVE ALL INDICATIONS OF THIS DOCUMENT'S AUTHORSHIP ON THE MAGNETIC MEDIA. PRINTED REPRESENTATIONS OF THE DRAWINGS AND SPECIFICATIONS (SEALED SHALL BE THE ONLY RECORD COPIES OF ALLEN & MAJOR ASSOCIATES, INC.'S WORK PRODUCT.

Copyright 2015 Allen & Major Associates, Inc.
All Rights Reserved

DRAWING TITLE :

PROPOSED LAYOUT PLAN

All dimensions, levels, layouts and field conditions shall be verified at the site by the contractor before proceeding with the work.

MRID Project No.	58012MASS
Consultant Project No.	1839-02D
Date:	08/14/2015
Drawn By: KEA	Checked By: TJW
Approved By: TJW	
File Name: C1839-02D	

C-1A

OFF-STREET PARKING SUMMARY

USE: (TABLE 7.1 – PRESUMPTIVE REQUIRED OFF-STREET PARKING:

LODGING SHALL HAVE (0.75) SPACES PER ROOM.
- (251 ROOMS) * (0.75) = 189 SPACES REQUIRED

RETAIL SHALL HAVE FOUR (4) SPACES FOR EACH ONE THOUSAND (1,000) SQUARE FEET OF NET FLOOR AREA.
- (31,250 SF) / (1,000 SF) * 4 = 125 SPACES REQUIRED

RESTAURANTS SHALL HAVE EIGHT (8) SPACES FOR EACH ONE THOUSAND (1,000) SQUARE FEET OF NET FLOOR AREA.
- (53,728 SF) / (1,000 SF) * 8 = 430 SPACES REQUIRED

CINEMAS SHALL HAVE ONE (1) SPACE PER SIX (6) SEATS.
- (750 SEATS) / 6 = 125 SPACES REQUIRED

DAY CARE SHALL HAVE TWO (2) SPACES PER SEVEN HUNDRED (700) SQUARE FEET OF NET FLOOR AREA.
- (6,000 SF) / (700 SF) * 2 = 18 SPACES REQUIRED

WAREHOUSE SHALL HAVE ONE (0.5) SPACES FOR EACH ONE THOUSAND (1,000) SQUARE FEET OF NET FLOOR AREA.
- (189,968 SF) / (1,000 SF) * 0.5 = 95 SPACES REQUIRED

CONVENTION HALL SHALL HAVE THREE (3) SPACES PER ONE THOUSAND (1,000) SQUARE FEET OF NET FLOOR AREA.
- (29,128 SF) / (1,000 SF) * 3 = 88 SPACES REQUIRED

CASINO SHALL HAVE THREE (3) SPACES PER ONE THOUSAND (1,000) SQUARE FEET OF NET FLOOR AREA.
- (126,262 SF) / (1,000 SF) * 3 = 379 SPACES REQUIRED

BOWLING SHALL HAVE THREE (3) SPACES PER ONE THOUSAND (1,000) SQUARE FEET OF NET FLOOR AREA.
- (9,501 SF) / (1,000 SF) * 3 = 29 SPACES REQUIRED

HOUSES OF WORSHIP SHALL HAVE ONE (1) SPACES FIVE (5) SEATS.
- (200 SEATS) / 5 = 40 SPACES REQUIRED

FITNESS/SPA SHALL HAVE THREE (3) SPACES PER ONE THOUSAND (1,000) SQUARE FEET OF NET FLOOR AREA.
- (5,955 SF) / (1,000 SF) * 3 = 18 SPACES REQUIRED

TOTAL SPACES REQUIRED = 1,536 (26 ACCESSIBLE)

	STANDARD PROVIDED	COMPACT PROVIDED	ACCESSIBLE PROVIDED	TOTAL PROVIDED
GARAGE PARKING	3,375	TBD	TBD	3,375
SURFACE PARKING	86	TBD	4	86
TOTAL PROVIDED	3,461	TBD	TBD	3,461

LAND USAGE TABLE - CASINO OVERLAY (COD)

ITEM	PROPOSED	REQUIRED/ALLOWED
LOT AREA	590,574 S.F. 13.56 ACRES	N/A
LOT FRONTAGE	646± FEET (MAIN STREET)	N/A
LOT WIDTH	646± FEET (MAIN STREET)	N/A
BUILDING COVERAGE	435,334± 74%	95%
FRONT YARD	2.9 FEET	0 FEET MIN. 10 FEET MAX.
SIDE YARD	0 FEET	0 FEET MIN.
REAR YARD	0 FEET	0 FEET MIN.
BUILDING HEIGHT	23 STORIES 317± FEET	N/A STORIES 400 FEET

NOTES:

1. THE LOCATIONS OF EXISTING UNDERGROUND UTILITIES ARE SHOWN IN AN APPROXIMATE WAY ONLY AND HAVE NOT BEEN INDEPENDENTLY VERIFIED BY THE OWNER OR IT'S REPRESENTATIVE. THE CONTRACTOR SHALL DETERMINE THE EXACT LOCATION OF ALL EXISTING UTILITIES BEFORE COMMENCING WORK, AND AGREES TO BE FULLY RESPONSIBLE FOR ANY AND ALL DAMAGES WHICH MIGHT BE OCCASIONED BY THE CONTRACTOR'S FAILURE TO EXACTLY LOCATE AND PRESERVE ANY AND ALL UNDERGROUND UTILITIES.
2. THE EXISTING CONDITIONS IS TAKEN FROM AN EXISTING CONDITIONS PLAN PREPARED FOR BLUE TARP REDEVELOPMENT, LLC PREPARED BY ALLEN & MAJOR ASSOCIATES, INC.
3. ALL ELEVATIONS REFER TO NAVD 88.
4. ALL RADII SHALL BE 3' UNLESS OTHERWISE NOTED.
5. THE INFORMATION SHOWN ON THIS PLAN IS THE SOLE PROPERTY OF ALLEN & MAJOR ASSOCIATES, INC. IT'S INTENDED USE IS TO PROVIDE INFORMATION. ANY ALTERATION, MISUSE, OR RECALCULATION OF INFORMATION OR DATA WITHOUT THE EXPRESSED, WRITTEN CONSENT OF ALLEN & MAJOR ASSOCIATES, INC. IS STRICTLY PROHIBITED.

PARKING NOTES:
1. THE CASINO OVERLAY DISTRICT (COD) SHALL MEET THE OFF-SITE PARKING PROVISIONS STIPULATED IN THE HOST COMMUNITY AGREEMENT (HCA).

LEGEND:

- SIGN
- BOLLARD
- SETBACK LINE
- GARAGE FOOTPRINT
- BUILDING OVERHANG
- BUILDING ARCHITECTURE
- CURB (MATERIAL PER PLAN)
- RETAINING WALL
- PARKING STRIPING
- ROADWAY STRIPING
- TRAFFIC ARROWS
- HEAVY DUTY CONCRETE
- CONCRETE SIDEWALK
- BRICK SIDEWALK
- ADA ACCESSIBLE RAMP
- ADA DET. WARNING SURFACE
- SNOW STORAGE
- STONE AREA
- COMPACT SPACE (C)
- PARKING COUNT (10)
- GUARDRAIL
- CHAIN LINK FENCE
- DECORATIVE FENCE
- BIKE RACK
- VGC — PROPOSED VERTICAL GRANITE CURBING
- EGC — EXISTING GRANITE CURBING

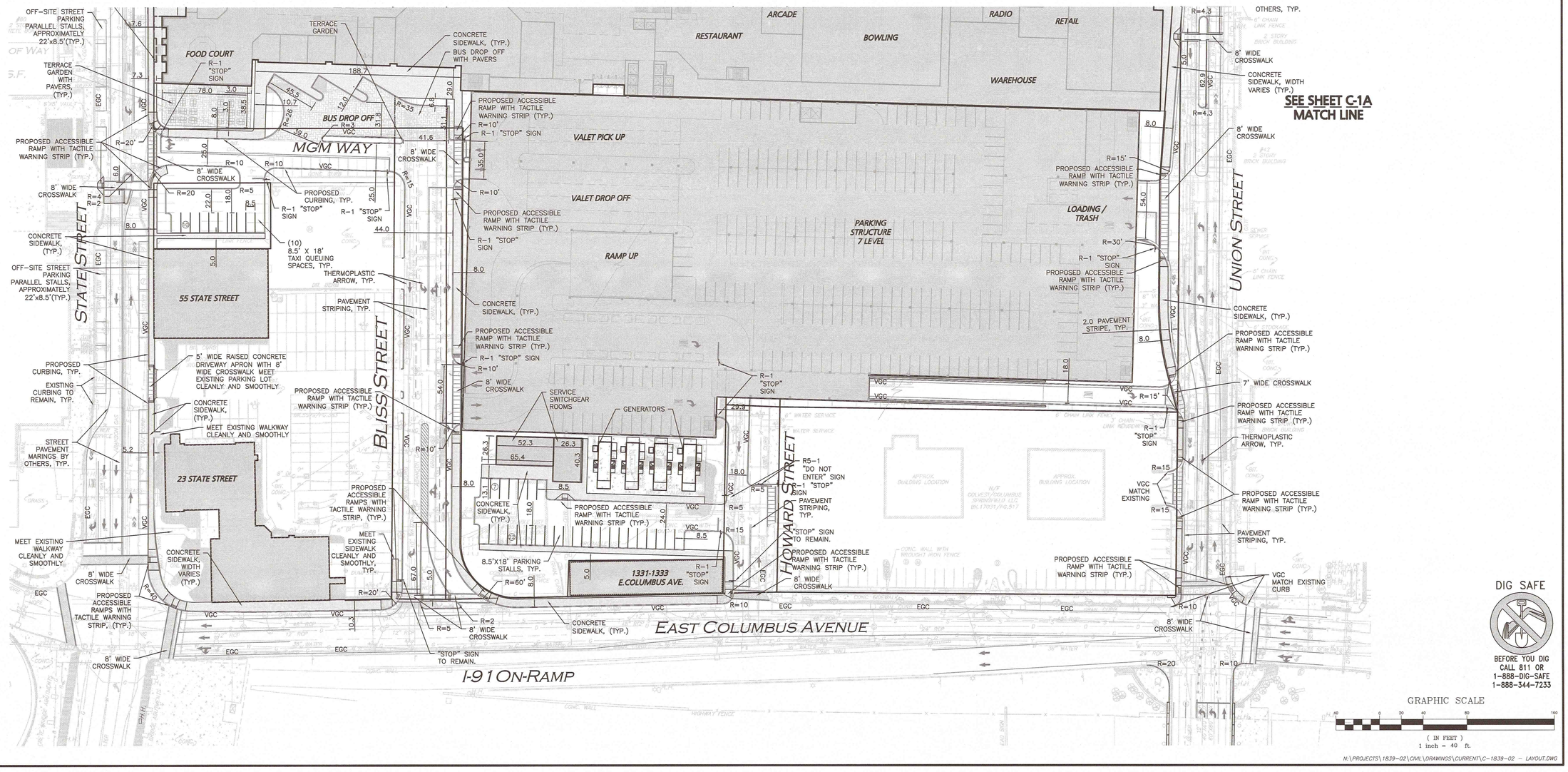

N:\PROJECTS\1839-02\CIVIL\DRAWINGS\CURRENT\C-1839-02 – LAYOUT.DWG

DIG SAFE
BEFORE YOU DIG CALL 811 OR 1-888-DIG-SAFE 1-888-344-7233

ENGINEER:
ALLEN & MAJOR ASSOCIATES, INC.
CIVIL & STRUCTURAL ENGINEERS • LAND SURVEYORS
WWW.ALLENMAJOR.COM
100 COMMERCE WAY
WOBURN, MA 01801-1104
PHONE: (781) 935-6889
FAX: (781) 935-2896
WOBURN, MA • HARTFORD, CT • MANCHESTER, NH

SEAL:
COMMONWEALTH OF MASSACHUSETTS
TIMOTHY J. WILLIAMS
CIVIL
No. 43119
REGISTERED PROFESSIONAL ENGINEER

CONSULTANT:

OWNER:
MGM RESORTS INTERNATIONAL
3260 Industrial Road, Las Vegas,NV 89109
702.692.9622 Phone 702.862.1750 Fax

PROJECT:
MGM SPRINGFIELD
SPRINGFIELD, MA
SITE/CIVIL RECORD

REVISIONS:

NO.	DATE	ISSUE
1	10/23/15	SITE PLAN APPROVAL

THIS DRAWING HAS BEEN PREPARED IN ELECTRONIC FORMAT. CLIENT/CLIENT'S REPRESENTATIVE OR CONSULTANT MAY BE PERMITTED TO RECEIVE COPIES OF THIS DRAWING IN MAGNETIC MEDIA FOR HIS/HER INFORMATION AND USE FOR SPECIFIC APPLICATION TO THIS PROJECT, DUE TO THE POTENTIAL THAT THE MAGNETIC INFORMATION MAY BE MODIFIED UNINTENTIONALLY OR OTHERWISE, ALLEN & MAJOR ASSOCIATES, INC. MAY REMOVE ALL REFERENCES TO THIS INFORMATION FROM THE MAGNETIC MEDIA. PRINTED REPRODUCTIONS OF THE DRAWINGS AND SPECIFICATIONS ISSUED SHALL BE THE ONLY RECORD COPIES OF ALLEN & MAJOR ASSOCIATES, INC.'S WORK PRODUCT.

Copyright 2015 Allen & Major Associates, Inc. All Rights Reserved

DRAWING TITLE:

PROPOSED LAYOUT PLAN

All dimensions, levels, layouts and field conditions shall be verified at the site by the contractor before proceeding with the work.

MRID Project No.	58012MASS
Consultant Project No.	1839-02D
Date:	08/14/2015

Drawn By	Checked By	Approved By
KEA	TJW	TJW

File Name: C1839-02D

C-1B

PROPOSED DRAIN MANHOLES

STRUCTURE	RIM	INVERT IN	INVERT IN	INVERT IN	INVERT IN	INVERT OUT	LENGTH	SLOPE	DIA.	MATERIAL
DMH1	64.35	60.25(CB1)	60.25(CB2)	60.65(CB3)		60.00(DMH7)	28	2.50%	15"	RCP
DMH2	66.50	63.50(AD16)	63.00(RD)	62.00(DMH33)		63.00(DMH3)	15	2.00%	12"	HDPE
						62.00(DMH33)	32	1.25%	15"	HDPE
DMH3	66.28		62.70(DMH2)	62.64(CB5)	62.64(CB6)	61.89(DMH4)	143	0.51%	18"	RCP
DMH4	66.04		62.20(CB7)	61.16(DMH3)		60.66(DMH5)	244	0.50%	24"	RCP
DMH5	66.15	60.95(EX.DMH)	59.44(DMH4)			59.38(DMH6)	124	0.50%	24"	RCP
DMH6	65.25	61.05(CB8)	59.82(CB9)	58.76(DMH5)		58.66(WQ1)	10	0.50%	24"	HDPE
DMH7	64.37	59.30(DMH1)	57.90(ST1)			57.80(DMH8)	59	1.50%	24"	RCP
DMH8	63.85	60.44(CB4)	56.91(DMH7)			56.81(EX.DMH)	13	2.00%	24"	RCP
DMH11	63.07	59.60(CB10)	59.60(CB11)			59.50(DMH12)	40	1.00%	12"	RCP
DMH12	63.30	59.0±(RD-V.I.F.**)	59.10(DMH11)			58.60(DMH13)	33	1.50%	18"	RCP
DMH13	63.55	58.10(12"HDPE)	58.10(18"ROOF)	58.10(DMH12)		57.60(DMH14)	57	0.40%	30"	RCP
DMH14	63.75	59.50(AD17)	59.50(CB12)	57.38(DMH13)		57.28(DMH15)	23	0.40%	30"	RCP
DMH15	64.10	59.08(12"HDPE)	58.08(18"ROOF)	57.19(DMH14)		56.69(DMH16)	24	0.40%	36"	RCP
DMH16	64.20	59.85(CB13)		56.60(DMH15)		56.50(DMH17)	33	0.40%	36"	RCP
DMH17	64.45	56.37(DMH16)				56.27(DMH23)	73	0.40%	36"	RCP
DMH18	64.90	59.50(AD2)	59.75(8"ROOF)	59.20(15"ROOF)		58.95(DMH19)	40	0.50%	18"	HDPE
DMH19	64.65	59.50(AD4)	58.75(DMH18)			58.25(DMH20)	46	0.50%	24"	HDPE
DMH20	64.65	59.50(AD6)	58.52(ROOF)	58.02(DMH19)		57.92(DMH21)	88	0.50%	24"	HDPE
DMH21	64.10	60.30(AD7)	58.08(ROOF)	57.48(DMH20)		56.98(DMH22)	59	0.50%	30"	HDPE
DMH22	64.12	60.36(AD8)	57.58(ROOF)	56.68(DMH21)		56.58(DMH23)	39	0.50%	30"	HDPE
DMH23	64.36	56.38(DMH22)	55.98(DMH17)			55.48(DMH24)	64	0.40%	42"	HDPE
DMH24	64.05	60.37(AD10)	60.11(CB15)	55.22(DMH23)		55.12(DMH30)	73	0.40%	42"	HDPE
DMH25	62.95	59.05(CB16)	58.50(18"ROOF)			58.00(DMH26)	120	0.50%	24"	RCP
DMH26	62.28	58.40(18"ROOF)	57.40(DMH25)			56.90(DMH27)	163	0.50%	30"	RCP
DMH27	63.10	56.09(DMH26)				56.04(DMH28)	115	0.50%	30"	RCP
DMH28	64.10	59.80(ROOF)	59.80(AD12)	55.46(DMH27)		55.41(DMH29)	41	0.50%	36"	HDPE
DMH29	63.85	60.00(AD13)	60.00(ROOF)	58.10(AD15)	55.21(DMH28)	55.11(DMH30)	58	0.50%	36"	HDPE
DMH30	64.05	54.82(DMH24)	54.82(DMH29)			54.55(DMH31)	14	0.40%	54"	HDPE
DMH31	63.75	54.50(DMH30)				53.00(WQ2)	5	2.00%	18"	HDPE
						50.50(DETENTION SYSTEM)	18	2.00%	54"	HDPE
DMH32	62.12	57.50 (6"UNDERDRAIN x2)	57.85(CB18)	57.07(CB19)	47.90(D.S.#1)	46.30	40	2.00%	30"	RCP
DMH33	66.70	61.60(DMH2)				61.50 (ISOLATOR ROW)			12"	HDPE
						62.50 (MANIFOLD)			12"	HDPE

NOTE:
1. HDPE DRAINAGE PIPE SHALL BE CORRUGATED HIGH DENSITY POLYETHYLENE (HDPE) WITH SMOOTH INTERIOR WALL.
2. ALL DRAINAGE PIPES IN THE PUBLIC WAY / CITY EASEMENT SHALL BE CLASS III RCP UNLESS DETERMINE OTHERWISE BY CITY ENGINEER.
3. ** VERIFY IN FIELD (V.I.F.)

PROPOSED CATCH BASINS

STRUCTURE	RIM	INVERT OUT	LENGTH	SLOPE	DIA.	MATERIAL
CB1*	64.20	60.69(DMH1)	88	0.50%	12"	RCP
CB2*	64.25	60.65(DMH1)	20	2.00%	12"	RCP
CB3*	64.25	60.75(DMH1)	5	2.00%	12"	RCP
CB4*	63.80	60.50(DMH8)	3	2.00%	12"	RCP
CB5**	66.00	62.75(DMH3)	8	1.37%	12"	RCP
CB6	66.50	63.00(DMH3)	21	1.71%	12"	RCP
CB7**	65.75	62.50(DMH4)	15	2.00%	12"	RCP
CB8	64.50	61.25(DMH6)	10	2.00%	12"	HDPE
CB9	64.00	60.75(DMH6)	185	0.50%	12"	HDPE
CB10	63.05	59.80(DMH11)	20	1.00%	12"	RCP
CB11	63.00	59.75(DMH11)	3	5.00%	12"	RCP
CB12	63.65	59.65(DMH14)	3	5.00%	12"	RCP
CB13	64.00	60.15(DMH16)	15	2.00%	12"	RCP
CB15	63.75	60.25(DMH24)	7	2.00%	12"	HDPE
CB16	62.45	59.45(DMH25)	80	0.50%	10"	DUCTILE IRON
CB17*	61.85	58.60(EX8"VC)	15	2.00% V.I.F.	8"	DUCTILE IRON
CB18*	61.85	58.35(DMH32)	25	2.00%	12"	HDPE
CB19*	61.85	58.35(DMH32)	128	1.0%	12"	HDPE

* DENOTES WATER QUALITY INLET
** DENOTES DOUBLE GRATE

STRUCTURE	VERTSENTRY MODEL
CB1*	VSHS36
CB2*	VSHS36
CB3*	VSHS36
CB4*	VSHS36
CB17*	VSHS36
CB18*	VSHS36
CB19*	VSHS36

PROPOSED WATER QUALITY STRUCTURES

STRUCTURE	TYPE	RIM	INV. IN	INV. OUT	LENGTH	SLOPE	DIA.	MAT.
WQ1	CDS2025-5	65.00	58.61(DMH6)	58.51(ST1)	5	4.00%	24"	HDPE
WQ2	VORTECHS VX9000	63.50±	52.90(DMH31)	52.65(DETENTION SYSTEM)	25	2.00%	18"	HDPE

PROPOSED AREA DRAINS

STRUCTURE	RIM	INVERT IN	INVERT OUT	LENGTH	SLOPE	DIA.	MATERIAL
AD1	64.60		60.96(AD2)	51	2.00%	12"	HDPE
AD2	64.70	59.94(AD1)	59.84(DMH18)	17	2.00%	12"	HDPE
AD3	64.50		60.68(AD4)	42	2.00%	12"	HDPE
AD4	64.50	59.84(AD3)	59.74(DMH19)	12	2.00%	12"	HDPE
AD5	64.50		60.68(AD6)	42	2.00%	12"	HDPE
AD6	64.50	59.84(AD5)	59.74(DMH20)	12	2.00%	12"	HDPE
AD7	64.00		60.50(DMH21)	4	5.00%	12"	HDPE
AD8	64.00		60.50(DMH18)	7	2.00%	12"	HDPE
AD9	64.00		60.50(36"RCP)	3	2.00%	12"	HDPE
AD10	63.95		60.45(DMH24)	4	2.00%	12"	HDPE
AD11	63.95		60.74(AD12)	50	1.00%	12"	HDPE
AD12	63.95	60.24(AD11)	60.14(DMH28)	34	1.00%	12"	HDPE
AD13	63.50		60.50(TEE)	6	2.00%	12"	HDPE
AD14	TBD		60.00(AD15)	40	2.00%	12"	HDPE
AD15	TBD	59.20(AD14)	59.10(DMH29)	50	2.00%	12"	HDPE
AD16	66.75		64.58(DMH2)	54	2.00%	12"	HDPE
AD17	64.50		61.30(DMH14)	90	2.00%	12"	HDPE

LEGEND:

DRAIN MANHOLE	
CATCH BASIN	
WATER QUALITY UNIT	
DRAIN LINE	
1' CONTOUR	128
PROPOSED SPOT GRADE	×128.00
EXISTING SPOT GRADE	× 120.50
SAW-CUT LINE	
SLOPE DIRECTION	
PERFORATED UNDERDRAIN	UD
SOLID UNDERDRAIN	SUD
INFILTRATION CHAMBERS	
EG	EXISTING GRADE
RE	REFUSAL ELEVATION

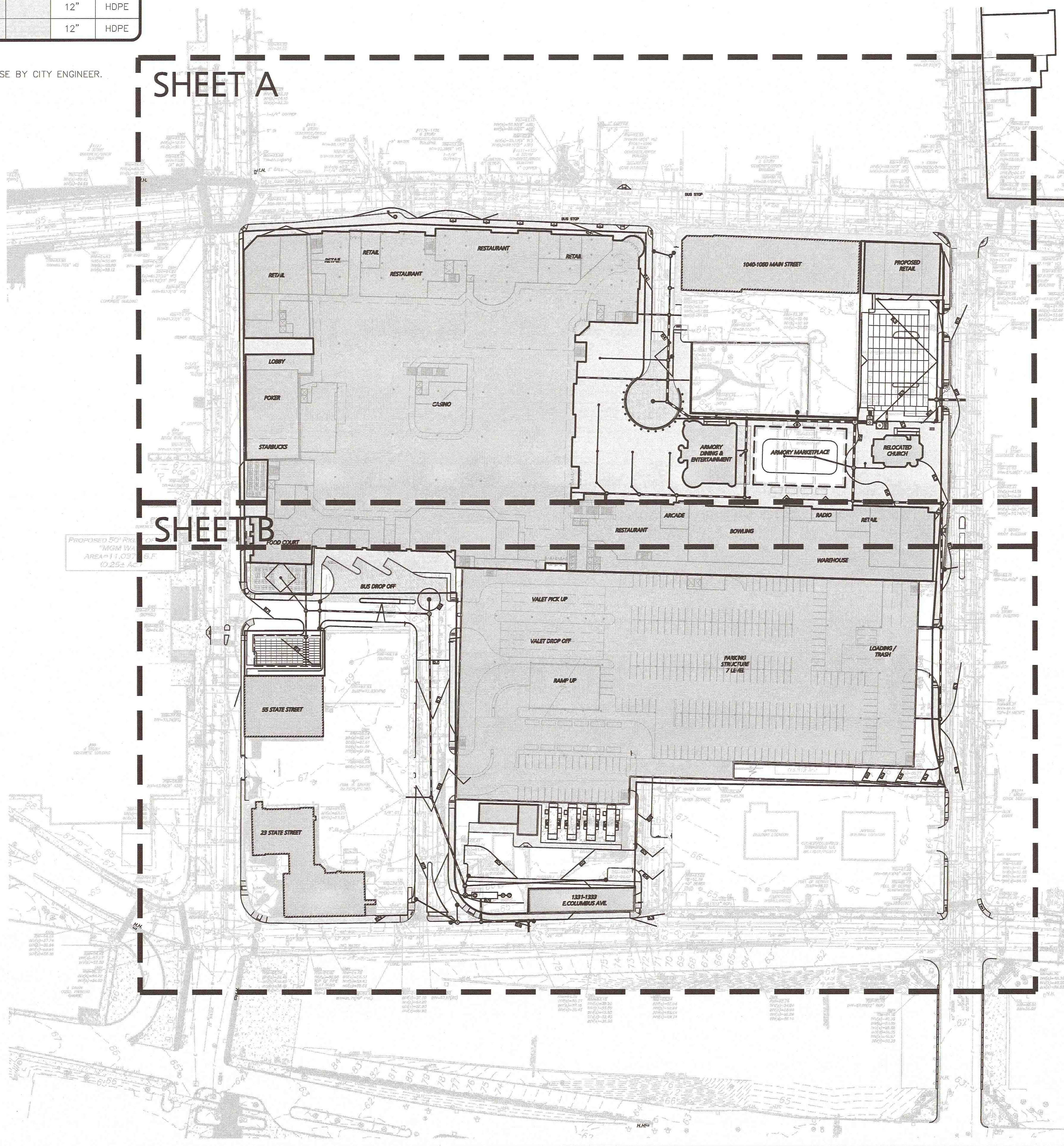

NOTES:

1. THE CONTRACTOR IS SPECIFICALLY CAUTIONED THAT THE LOCATION AND/OR ELEVATION OF EXISTING UTILITIES AND STRUCTURES AS SHOWN ON THESE PLANS IS BASED ON RECORDS OF VARIOUS UTILITY COMPANIES AND WHERE POSSIBLE, MEASUREMENTS TAKEN IN THE FIELD. THIS INFORMATION IS NOT TO BE RELIED ON AS BEING EXACT OR COMPLETE. THE LOCATION OF ALL UNDERGROUND UTILITIES AND STRUCTURES SHALL BE VERIFIED IN THE FIELD BY THE CONTRACTOR PRIOR TO THE START OF CONSTRUCTION. THE CONTRACTOR MUST CONTACT THE APPROPRIATE UTILITY COMPANY, ANY GOVERNING PERMITTING AUTHORITY, AND "DIGSAFE" AT LEAST 72 HOURS PRIOR TO ANY EXCAVATION WORK TO REQUEST EXACT FIELD LOCATION OF UTILITIES AND THE ENGINEER SHALL BE NOTIFIED IN WRITING OF ANY UTILITIES INTERFERING WITH THE PROPOSED CONSTRUCTION AND APPROPRIATE REMEDIAL ACTION TAKEN BEFORE PROCEEDING WITH THE WORK. IT SHALL BE THE RESPONSIBILITY OF THE CONTRACTOR TO RELOCATE ALL EXISTING UTILITIES WHICH CONFLICT WITH THE PROPOSED IMPROVEMENTS SHOWN ON THE PLANS AT NO ADDITIONAL COST.
2. THE CONTRACTOR SHALL CONTACT "DIGSAFE" AND THE CITY OF SPRINGFIELD DEPARTMENT OF PUBLIC WORKS AT LEAST 72 HOURS PRIOR TO ANY EXCAVATION WORK TO REQUEST THE LOCATION OF THE EXISTING UTILITIES.
   DIGSAFE: 1-800-344-7233
   SPRINGFIELD SEWER & WATER COMMISSION: 1-413-787-6256
   SPRINGFIELD DEPARTMENT OF PUBLIC WORKS: 1-413-787-6260
3. SEE THE ABBREVIATIONS AND NOTES PLAN, SHEET ABB-1 FOR EROSION CONTROL NOTES AND DETAIL SHEET FOR CITY OF SPRINGFIELD NOTES.
4. CONTRACTOR TO DEWATER ONSITE ONLY. NO DEWATERING CAN OUTLET TO EXISTING DRAINAGE OR TO CITY OF SPRINGFIELD STREET DRAINAGE.
5. THE INFORMATION SHOWN ON THIS PLAN IS THE SOLE PROPERTY OF ALLEN & MAJOR ASSOCIATES, INC. IT'S INTENDED USE IS TO PROVIDE INFORMATION. ANY ALTERATION, MISUSE, OR RECALCULATION OF INFORMATION OR DATA WITHOUT THE EXPRESSED, WRITTEN CONSENT OF ALLEN & MAJOR ASSOCIATES, INC. IS STRICTLY PROHIBITED.
6. THE LOCATIONS OF EXISTING UNDERGROUND UTILITIES ARE SHOWN IN AN APPROXIMATE WAY ONLY AND HAVE NOT BEEN INDEPENDENTLY VERIFIED BY THE OWNER OR IT'S REPRESENTATIVE. THE CONTRACTOR SHALL DETERMINE THE EXACT LOCATION OF ALL EXISTING UTILITIES BEFORE COMMENCING WORK, AND AGREES TO BE FULLY RESPONSIBLE FOR ANY AND ALL DAMAGES WHICH MIGHT BE OCCASIONED BY THE CONTRACTOR'S FAILURE TO EXACTLY LOCATE AND PRESERVE ANY AND ALL UNDERGROUND UTILITIES.
7. GRADING / DEMOLITION OUTSIDE OF THE PROJECT BOUNDARIES REQUIRES A TEMPORARY CONSTRUCTION/GRADING EASEMENT FROM THE LANDOWNER (BY OTHERS).
8. THE CONTRACTOR IS HEREBY NOTIFIED THAT ADDITIONAL REQUIREMENTS BEYOND WHAT IS SPECIFIED WITHIN THESE DRAWINGS MAY BE LISTED WITHIN THE SWSC PERMIT. THE CONTRACTOR SHALL HAVE ON-SITE A COPY OF ALL PERMITS FOR REFERENCE AND SHALL BE RESPONSIBLE FOR STRICT ADHERENCE.
9. THE CONTRACTOR WILL BE RESPONSIBLE FOR ALL NECESSARY DEMOLITION WORK TO COMPLETE THE PROJECT. ALLEN & MAJOR ASSOCIATES, INC. IS NOT RESPONSIBLE FOR SITE DEMOLITION ITEMS NOT SHOWN ON THE SURVEY, OR SPECIFICALLY NOTED.
10. SILT SACKS SHALL BE INSTALLED IN ALL EXISTING AND PROPOSED CATCH BASINS AND REMAIN UNTIL STRUCTURE IS EITHER REMOVED OR SITE AND BUILDING CONSTRUCTION HAS BEEN COMPLETED.
11. ALL ELEVATIONS REFER TO NAVD '88.
12. PIPE DIMENSIONS ARE MEASURED FROM THE INSIDE FACE OF THE STRUCTURE.
13. UTILITIES SHOWN FOR COORDINATION PURPOSES. CONTRACTOR TO COORDINATE WITH UTILITY PROVIDER & CITY OF SPRINGFIELD TO CONFIRM EXISTING CAPACITY, FINAL LOCATION AND SIZING, AND MEET STANDARDS FOR PROPOSED UTILITY SERVICE.
14. CONTRACTOR TO TRENCH PATCH PER CITY OF SPRINGFIELD UTILITY AND PAVEMENT REQUIREMENTS, TYP. CLEANLY SAWCUT ALL UTILITY TRENCHING AREAS. EXISTING SIDEWALK AND CURBS TO BE REMOVED AND REPLACED WITH NEW CURBING AND SIDEWALK THAT SMOOTHLY MEETS EXISTING LINE AND GRADES.
15. ALTHOUGH CERTAIN ITEMS HAVE BEEN NOTED ON THIS DRAWING FOR DEMOLITION, NO ATTEMPT HAS BEEN MADE TO DELINEATE EACH AND EVERY ITEM THAT REQUIRES DEMOLITION FOR THE COMPLETION OF THE PROJECT. THE CONTRACTOR WILL BE RESPONSIBLE FOR ALL NECESSARY DEMOLITION WORK TO COMPLETE THE PROJECT. ALLEN & MAJOR ASSOCIATES, INC. IS NOT RESPONSIBLE FOR SITE DEMOLITION ITEMS NOT SHOWN ON THE SURVEY, OR SPECIFICALLY NOTED. THE DEMOLITION NOTES AND ARROWS ON THIS PLAN ARE TYPICAL AND DO NOT REFLECT QUANTITY.
16. CONTRACTOR SHALL PERFORM FIELD INVESTIGATIONS TO VERIFY WHICH MAIN ALL CATCH BASINS WITHIN UNION STREET ARE CONNECTED TO. IF NOT ALREADY, ALL CATCH BASINS SHALL BE CONNECTED TO THE 60-INCH BY 80-INCH DRAINAGE MAIN.

DIG SAFE
BEFORE YOU DIG CALL 811 OR 1-888-DIG-SAFE 1-888-344-7233

GRAPHIC SCALE
80 0 40 80 160 320
(IN FEET)
1 inch = 80 ft.

N:\PROJECTS\1839-02\CIVIL\DRAWINGS\CURRENT\C-1839-02 - GRADING & DRAINAGE.DWG

ENGINEER:
ALLEN & MAJOR ASSOCIATES, INC.
civil & structural engineering • land surveying
environmental consulting • landscape architecture
www.allenmajor.com
100 COMMERCE WAY
P.O. BOX 2118
WOBURN MA 01888-0118
TEL: (781) 935-6889
FAX: (781) 935-2896
WOBURN, MA • LAKEVILLE, MA • MANCHESTER, NH

SEAL:
COMMONWEALTH OF MASSACHUSETTS
TIMOTHY J. WILLIAMS
CIVIL
No.43119
REGISTERED PROFESSIONAL ENGINEER
10/23/15

CONSULTANT:

OWNER:
MGM RESORTS INTERNATIONAL™
3260 Industrial Road, Las Vegas,NV 89109
702.692.9622 Phone 702.862.1750 Fax

MGM SPRINGFIELD
SPRINGFIELD, MA

PROJECT:
MGM SPRINGFIELD - SITE/CIVIL RECORD

REVISIONS:

NO.	DATE	ISSUE
1	10/23/15	SITE PLAN APPROVAL

THIS DRAWING HAS BEEN PREPARED IN ELECTRONIC FORMAT. CLIENT/CLIENT'S REPRESENTATIVE OR CONSULTANT MAY BE PROVIDED COPIES OF DRAWINGS AND SPECIFICATIONS ON MAGNETIC MEDIA FOR HIS/HER INFORMATION AND USE FOR SPECIFIC APPLICATION TO THIS PROJECT. DUE TO THE POTENTIAL THAT THE MAGNETIC INFORMATION MAY BE MODIFIED UNINTENTIONALLY OR OTHERWISE, ALLEN & MAJOR ASSOCIATES, INC. MAY REMOVE ALL INDICATION OF THE DOCUMENT'S AUTHORSHIP ON THE MAGNETIC MEDIA. PRINTED REPRESENTATIONS OF THE DRAWINGS AND SPECIFICATIONS ISSUED SHALL BE THE ONLY RECORD COPIES OF ALLEN & MAJOR ASSOCIATES, INC.'S WORK PRODUCT.

Copyright 2015 Allen & Major Associates, Inc.
All Rights Reserved

DRAWING TITLE:
PROPOSED OVERALL GRADING & DRAINAGE PLAN

All dimensions, levels, layouts and field conditions shall be verified at the site by the contractor before proceeding with the work.

MRID Project No.	58012MASS
Consultant Project No.	1839-02D
Date:	08/14/2015

Drawn By	Checked By	Approved By
KEA	TJW	TJW

File Name: C1839-02D

C-2

PROPOSED DRAIN MANHOLES

STRUCTURE	RIM	INVERT IN	INVERT IN	INVERT IN	INVERT IN	INVERT OUT	LENGTH	SLOPE	DIA.	MATERIAL
DMH1	64.35	60.25(CB1)	60.25(CB2)	60.65(CB3)		60.00(DMH7)	28	2.50%	15"	RCP
DMH2	66.50	63.50(AD16)	63.00(RD)	62.00(DMH33)		63.00(DMH3)	15	2.00%	12"	HDPE
						62.00(DMH33)	32	1.25%	15"	HDPE
DMH3	66.28		62.70(DMH2)	62.64(CB5)	62.64(CB6)	61.89(DMH4)	143	0.51%	18"	RCP
DMH4	66.04		62.20(CB7)	61.16(DMH3)		60.66(DMH5)	244	0.50%	24"	RCP
DMH5	66.15	60.95(EX.DMH)	59.44(DMH4)			59.38(DMH6)	124	0.50%	24"	RCP
DMH6	65.25	61.05(CB8)	59.82(CB9)	58.76(DMH5)		58.66(WQ1)	10	0.50%	24"	HDPE
DMH7	64.37	59.30(DMH1)	57.90(ST1)			57.80(DMH8)	59	1.50%	24"	RCP
DMH8	63.85	60.44(CB4)	56.91(DMH7)			56.81(EX.DMH)	13	2.00%	24"	RCP
DMH11	63.07	59.60(CB10)	59.60(CB11)			59.50(DMH12)	40	1.00%	12"	RCP
DMH12	63.30	59.0±(RD–V.I.F.**)	59.10(DMH11)			58.60(DMH13)	33	1.50%	18"	RCP
DMH13	63.55	58.10(12"HDPE)	58.10(18"ROOF)	58.10(DMH12)		57.60(DMH14)	57	0.40%	30"	RCP
DMH14	63.75	59.50(AD17)	59.50(CB12)	57.38(DMH13)		57.28(DMH15)	23	0.40%	30"	RCP
DMH15	64.10	59.08(12"HDPE)	58.08(18"ROOF)	57.19(DMH14)		56.69(DMH16)	24	0.40%	36"	RCP
DMH16	64.20	59.85(CB13)		56.60(DMH15)		56.50(DMH17)	33	0.40%	36"	RCP
DMH17	64.45	56.37(DMH16)				56.27(DMH23)	73	0.40%	36"	RCP
DMH18	64.90	59.50(AD2)	59.75(8"ROOF)	59.20(15"ROOF)		58.95(DMH19)	40	0.50%	18"	HDPE
DMH19	64.65	59.50(AD4)	58.75(DMH18)			58.25(DMH20)	46	0.50%	24"	HDPE
DMH20	64.65	59.50(AD6)	58.52(ROOF)	58.02(DMH19)		57.92(DMH21)	88	0.50%	24"	HDPE
DMH21	64.10	60.30(AD7)	58.08(ROOF)	57.48(DMH20)		56.98(DMH22)	59	0.50%	30"	HDPE
DMH22	64.12	60.36(AD8)	57.58(ROOF)	56.68(DMH21)		56.58(DMH23)	39	0.50%	30"	HDPE
DMH23	64.36	56.38(DMH22)	55.98(DMH17)			55.48(DMH24)	64	0.40%	42"	HDPE
DMH24	64.05	60.37(AD10)	60.11(CB15)	55.22(DMH23)		55.12(DMH30)	73	0.40%	42"	HDPE
DMH25	62.95	59.05(CB16)	58.50(18"ROOF)			58.00(DMH26)	120	0.50%	24"	RCP
DMH26	62.28	58.40(18"ROOF)	57.40(DMH25)			56.90(DMH27)	163	0.50%	30"	RCP
DMH27	63.10	56.09(DMH26)				56.04(DMH28)	115	0.50%	30"	RCP
DMH28	64.10	59.80(ROOF)	59.80(AD12)	55.46(DMH27)		55.41(DMH29)	41	0.50%	36"	HDPE
DMH29	63.85	60.00(AD13)	60.00(ROOF)	58.10(AD15)	55.21(DMH28)	55.11(DMH30)	58	0.50%	36"	HDPE
DMH30	64.05	54.82(DMH24)	54.82(DMH29)			54.55(DMH31)	14	0.40%	54"	HDPE
DMH31	63.75	54.50(DMH30)				53.00(WQ2)	5	2.00%	18"	HDPE
						50.50(DETENTION SYSTEM)	18	2.00%	54"	HDPE
DMH32	62.12	57.50 (6"UNDERDRAIN x2)	57.85(CB18)	57.07(CB19)	47.90(D.S.#1)	46.30	40	2.00%	30"	RCP
DMH33	66.70	61.60(DMH2)				61.50 (ISOLATOR ROW)			12"	HDPE
						62.50 (MANIFOLD)			12"	HDPE

NOTE:
1. HDPE DRAINAGE PIPE SHALL BE CORRUGATED HIGH DENSITY POLYETHYLENE (HDPE) WITH SMOOTH INTERIOR WALL.
2. ALL DRAINAGE PIPES IN THE PUBLIC WAY / CITY EASEMENT SHALL BE CLASS III RCP UNLESS DETERMINE OTHERWISE BY CITY ENGINEER.
3. ** VERIFY IN FIELD (V.I.F.)

PROPOSED CATCH BASINS

STRUCTURE	RIM	INVERT OUT	LENGTH	SLOPE	DIA.	MATERIAL
CB1*	64.20	60.69(DMH1)	88	0.50%	12"	RCP
CB2*	64.25	60.65(DMH1)	20	2.00%	12"	RCP
CB3*	64.25	60.75(DMH1)	5	2.00%	12"	RCP
CB4*	63.80	60.50(DMH8)	3	2.00%	12"	RCP
CB5**	66.00	62.75(DMH3)	8	1.37%	12"	RCP
CB6	66.50	63.00(DMH3)	21	1.71%	12"	RCP
CB7**	65.75	62.50(DMH4)	15	2.00%	12"	RCP
CB8	64.50	61.25(DMH6)	10	2.00%	12"	HDPE
CB9	64.00	60.75(DMH6)	185	0.50%	12"	HDPE
CB10	63.05	59.80(DMH11)	20	1.00%	12"	RCP
CB11	63.00	59.75(DMH11)	3	5.00%	12"	RCP
CB12	63.65	59.65(DMH14)	3	5.00%	12"	RCP
CB13	64.00	60.15(DMH16)	15	2.00%	12"	RCP
CB15	63.75	60.25(DMH24)	7	2.00%	12"	HDPE
CB16	62.45	59.45(DMH25)	80	0.50%	10"	DUCTILE IRON
CB17*	61.85	58.60(EX8"VC)	15	2.00% V.I.F.	8"	DUCTILE IRON
CB18*	61.85	58.35(DMH32)	25	2.00%	12"	HDPE
CB19*	61.85	58.35(DMH32)	128	1.0%	12"	HDPE

* DENOTES WATER QUALITY INLET
** DENOTES DOUBLE GRATE

STRUCTURE	VERTSENTRY MODEL
CB1*	VSHS36
CB2*	VSHS36
CB3*	VSHS36
CB4*	VSHS36
CB17*	VSHS36
CB18*	VSHS36
CB19*	VSHS36

PROPOSED WATER QUALITY STRUCTURES

STRUCTURE	TYPE	RIM	INV. IN	INV. OUT	LENGTH	SLOPE	DIA.	MAT.
WQ1	CDS2025-5	65.00	58.61(DMH6)	58.51(ST1)	5	4.00%	24"	HDPE
WQ2	VORTECHS VX9000	63.50±	52.90(DMH31)	52.65(DETENTION SYSTEM)	25	2.00%	18"	HDPE

PROPOSED AREA DRAINS

STRUCTURE	RIM	INVERT IN	INVERT OUT	LENGTH	SLOPE	DIA.	MATERIAL
AD1	64.60		60.96(AD2)	51	2.00%	12"	HDPE
AD2	64.70	59.94(AD1)	59.84(DMH18)	17	2.00%	12"	HDPE
AD3	64.50		60.68(AD4)	42	2.00%	12"	HDPE
AD4	64.50	59.84(AD3)	59.74(DMH19)	12	2.00%	12"	HDPE
AD5	64.50		60.68(AD6)	42	2.00%	12"	HDPE
AD6	64.50	59.84(AD5)	59.74(DMH20)	12	2.00%	12"	HDPE
AD7	64.00		60.50(DMH21)	4	5.00%	12"	HDPE
AD8	64.00		60.50(DMH18)	7	2.00%	12"	HDPE
AD9	64.00		60.50(36"RCP)	3	2.00%	12"	HDPE
AD10	63.95		60.45(DMH24)	4	2.00%	12"	HDPE
AD11	63.95		60.74(AD12)	50	1.00%	12"	HDPE
AD12	63.95	60.24(AD11)	60.14(DMH28)	34	1.00%	12"	HDPE
AD13	63.50		60.50(TEE)	6	2.00%	12"	HDPE
AD14	TBD		60.00(AD15)	40	2.00%	12"	HDPE
AD15	TBD	59.20(AD14)	59.10(DMH29)	50	2.00%	12"	HDPE
AD16	66.75		64.58(DMH2)	54	2.00%	12"	HDPE
AD17	64.50		61.30(DMH14)	90	2.00%	12"	HDPE

LEGEND:

DRAIN MANHOLE	
CATCH BASIN	
WATER QUALITY UNIT	
DRAIN LINE	
1' CONTOUR	128
PROPOSED SPOT GRADE	×128.00
EXISTING SPOT GRADE	× 120.50
SAW-CUT LINE	
SLOPE DIRECTION	
PERFORATED UNDERDRAIN	UD
SOLID UNDERDRAIN	SUD
INFILTRATION CHAMBERS	
EG	EXISTING GRADE
RE	REFUSAL ELEVATION

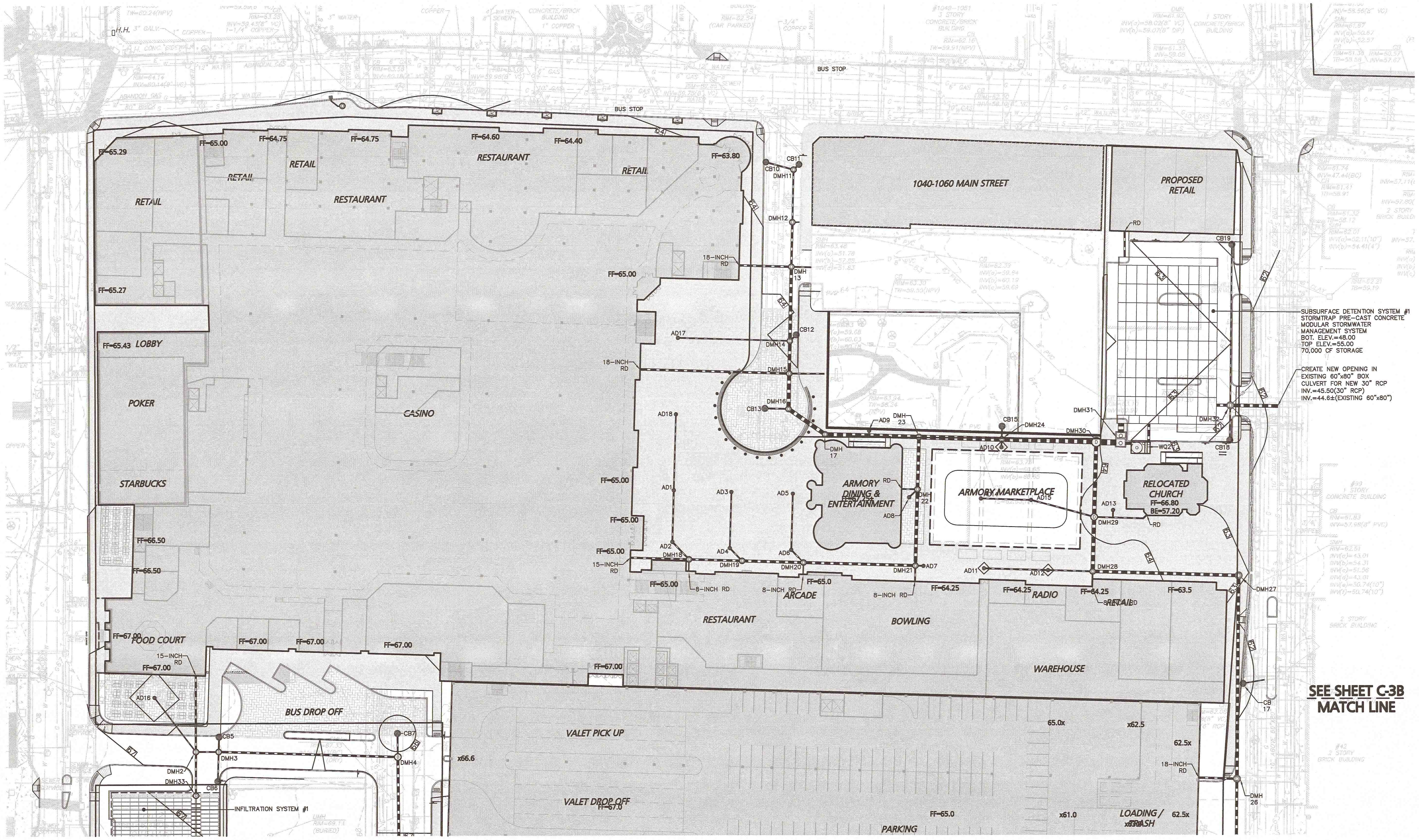

SEE SHEET C-3B MATCH LINE

NOTES:

1. THE CONTRACTOR IS SPECIFICALLY CAUTIONED THAT THE LOCATION AND/OR ELEVATION OF EXISTING UTILITIES AND STRUCTURES AS SHOWN ON THESE PLANS IS BASED ON RECORDS OF VARIOUS UTILITY COMPANIES AND WHERE POSSIBLE, MEASUREMENTS TAKEN IN THE FIELD. THIS INFORMATION IS NOT TO BE RELIED ON AS BEING EXACT OR COMPLETE. THE LOCATION OF ALL UNDERGROUND UTILITIES AND STRUCTURES SHALL BE VERIFIED IN THE FIELD BY THE CONTRACTOR PRIOR TO THE START OF CONSTRUCTION. THE CONTRACTOR MUST CONTACT THE APPROPRIATE UTILITY COMPANY, ANY GOVERNING PERMITTING AUTHORITY, AND "DIGSAFE" AT LEAST 72 HOURS PRIOR TO ANY EXCAVATION WORK TO REQUEST EXACT FIELD LOCATION OF UTILITIES AND THE ENGINEER SHALL BE NOTIFIED IN WRITING OF ANY UTILITIES INTERFERING WITH THE PROPOSED CONSTRUCTION AND APPROPRIATE REMEDIAL ACTION TAKEN BEFORE PROCEEDING WITH THE WORK. IT SHALL BE THE RESPONSIBILITY OF THE CONTRACTOR TO RELOCATE ALL EXISTING UTILITIES WHICH CONFLICT WITH THE PROPOSED IMPROVEMENTS SHOWN ON THE PLANS AT NO ADDITIONAL COST.
2. THE CONTRACTOR SHALL CONTACT "DIGSAFE" AND THE CITY OF SPRINGFIELD DEPARTMENT OF PUBLIC WORKS AT LEAST 72 HOURS PRIOR TO ANY EXCAVATION WORK TO REQUEST THE LOCATION OF THE EXISTING UTILITIES.
   DIGSAFE: 1-800-344-7233
   SPRINGFIELD SEWER & WATER COMMISSION: 1-413-787-6256
   SPRINGFIELD DEPARTMENT OF PUBLIC WORKS: 1-413-787-6260
3. SEE THE ABBREVIATIONS AND NOTES PLAN, SHEET ABB-1 FOR EROSION CONTROL NOTES AND DETAIL SHEET FOR CITY OF SPRINGFIELD NOTES.
4. CONTRACTOR TO DEWATER ONSITE ONLY. NO DEWATERING CAN OUTLET TO EXISTING DRAINAGE OR TO CITY OF SPRINGFIELD STREET DRAINAGE.
5. THE INFORMATION SHOWN ON THIS PLAN IS THE SOLE PROPERTY OF ALLEN & MAJOR ASSOCIATES, INC. IT'S INTENDED USE IS TO PROVIDE INFORMATION. ANY ALTERATION, MISUSE, OR RECALCULATION OF INFORMATION OR DATA WITHOUT THE EXPRESSED, WRITTEN CONSENT OF ALLEN & MAJOR ASSOCIATES, INC. IS STRICTLY PROHIBITED.
6. THE LOCATIONS OF EXISTING UNDERGROUND UTILITIES ARE SHOWN IN AN APPROXIMATE WAY ONLY AND HAVE NOT BEEN INDEPENDENTLY VERIFIED BY THE OWNER OR IT'S REPRESENTATIVE. THE CONTRACTOR SHALL DETERMINE THE EXACT LOCATION OF ALL EXISTING UTILITIES BEFORE COMMENCING WORK, AND AGREES TO BE FULLY RESPONSIBLE FOR ANY AND ALL DAMAGES WHICH MIGHT BE OCCASIONED BY THE CONTRACTOR'S FAILURE TO EXACTLY LOCATE AND PRESERVE ANY AND ALL UNDERGROUND UTILITIES.
7. GRADING / DEMOLITION OUTSIDE OF THE PROJECT BOUNDARIES REQUIRES A TEMPORARY CONSTRUCTION/GRADING EASEMENT FROM THE LANDOWNER (BY OTHERS).
8. THE CONTRACTOR IS HEREBY NOTIFIED THAT ADDITIONAL REQUIREMENTS BEYOND WHAT IS SPECIFIED WITHIN THESE DRAWINGS MAY BE LISTED WITHIN THE SWSC PERMIT. THE CONTRACTOR SHALL HAVE ON-SITE A COPY OF ALL PERMITS FOR REFERENCE AND SHALL BE RESPONSIBLE FOR STRICT ADHERENCE.
9. THE CONTRACTOR WILL BE RESPONSIBLE FOR ALL NECESSARY DEMOLITION WORK TO COMPLETE THE PROJECT. ALLEN & MAJOR ASSOCIATES, INC. IS NOT RESPONSIBLE FOR SITE DEMOLITION ITEMS NOT SHOWN ON THE SURVEY, OR SPECIFICALLY NOTED.
10. SILT SACKS SHALL BE INSTALLED IN ALL EXISTING AND PROPOSED CATCH BASINS AND REMAIN UNTIL STRUCTURE IS EITHER REMOVED OR SITE AND BUILDING CONSTRUCTION HAS BEEN COMPLETED.
11. ALL ELEVATIONS REFER TO NAVD '88.
12. PIPE DIMENSIONS ARE MEASURED FROM THE INSIDE FACE OF THE STRUCTURE.
13. UTILITIES SHOWN FOR COORDINATION PURPOSES. CONTRACTOR TO COORDINATE WITH UTILITY PROVIDER & CITY OF SPRINGFIELD TO CONFIRM EXISTING CAPACITY, FINAL LOCATION AND SIZING, AND MEET STANDARDS FOR PROPOSED UTILITY SERVICE.
14. CONTRACTOR TO TRENCH PATCH PER CITY OF SPRINGFIELD UTILITY AND PAVEMENT REQUIREMENTS, TYP. CLEANLY SAWCUT ALL UTILITY TRENCHING AREAS. EXISTING SIDEWALK AND CURBS TO BE REMOVED AND REPLACED WITH NEW CURBING AND SIDEWALK THAT SMOOTHLY MEETS EXISTING LINE AND GRADES.
15. ALTHOUGH CERTAIN ITEMS HAVE BEEN NOTED ON THIS DRAWING FOR DEMOLITION, NO ATTEMPT HAS BEEN MADE TO DELINEATE EACH AND EVERY ITEM THAT REQUIRES DEMOLITION FOR THE COMPLETION OF THE PROJECT. THE CONTRACTOR WILL BE RESPONSIBLE FOR ALL NECESSARY DEMOLITION WORK TO COMPLETE THE PROJECT. ALLEN & MAJOR ASSOCIATES, INC. IS NOT RESPONSIBLE FOR SITE DEMOLITION ITEMS NOT SHOWN ON THE SURVEY, OR SPECIFICALLY NOTED. THE DEMOLITION NOTES AND ARROWS ON THIS PLAN ARE TYPICAL AND DO NOT REFLECT QUANTITY.
16. CONTRACTOR SHALL PERFORM FIELD INVESTIGATIONS TO VERIFY WHICH MAIN ALL CATCH BASINS WITHIN UNION STREET ARE CONNECTED TO. IF NOT ALREADY, ALL CATCH BASINS SHALL BE CONNECTED TO THE 60-INCH BY 80-INCH DRAINAGE MAIN.

DIG SAFE
BEFORE YOU DIG
CALL 811 OR
1-888-DIG-SAFE
1-888-344-7233

GRAPHIC SCALE
40 0 20 40 80 160
(IN FEET)
1 inch = 40 ft.

N:\PROJECTS\1839-02\CIVIL\DRAWINGS\CURRENT\C-1839-02 - GRADING & DRAINAGE.DWG

ENGINEER:
ALLEN & MAJOR ASSOCIATES, INC.
civil & structural engineering • land surveying
environmental consulting • landscape architecture
www.allenmajor.com
100 COMMERCE WAY
P.O. BOX 2118
WOBURN MA 01888-0118
TEL: (781) 935-6889
FAX: (781) 935-2896
WOBURN, MA • LAKEVILLE, MA • MANCHESTER, NH

SEAL:

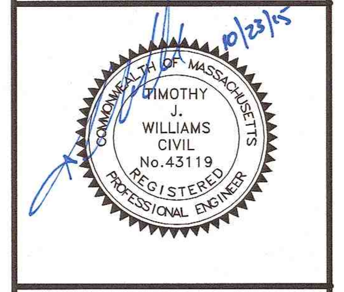

CONSULTANT:

OWNER:
MGM RESORTS INTERNATIONAL
3260 Industrial Road, Las Vegas,NV 89109
702.692.9622 Phone 702.862.1750 Fax

MGM SPRINGFIELD
SPRINGFIELD, MA

PROJECT:
MGM SPRINGFIELD - SITE/CIVIL RECORD

REVISIONS:

NO.	DATE	ISSUE
1	10/23/15	SITE PLAN APPROVAL

THIS DRAWING HAS BEEN PREPARED IN ELECTRONIC FORMAT. CLIENT/CLIENT'S REPRESENTATIVE OR CONSULTANT MAY BE PROVIDED COPIES OF DRAWINGS AND SPECIFICATIONS ON MAGNETIC MEDIA FOR HIS/HER INFORMATION AND USE FOR SPECIFIC APPLICATION TO THIS PROJECT. DUE TO THE POTENTIAL THAT THE MAGNETIC INFORMATION MAY BE MODIFIED UNINTENTIONALLY OR OTHERWISE, ALLEN & MAJOR ASSOCIATES, INC. MAY REMOVE ALL INDICATION OF THE DOCUMENT'S AUTHORSHIP ON THE MAGNETIC MEDIA. PRINTED REPRESENTATIONS OF THE DRAWINGS AND SPECIFICATIONS ISSUED SHALL BE THE ONLY RECORD COPIES OF ALLEN & MAJOR ASSOCIATES, INC.'S WORK PRODUCT.

Copyright 2015 Allen & Major Associates, Inc.
All Rights Reserved

DRAWING TITLE:

PROPOSED GRADING & DRAINAGE PLAN

All dimensions, levels, layouts and field conditions shall be verified at the site by the contractor before proceeding with the work.

MRID Project No.	58012MASS
Consultant Project No.	1839-02D
Date:	08/14/2015

Drawn By	Checked By	Approved By
KEA	TJW	TJW

File Name: C1839-02D

C-2A

PROPOSED DRAIN MANHOLES

STRUCTURE	RIM	INVERT IN	INVERT IN	INVERT IN	INVERT IN	INVERT OUT	LENGTH	SLOPE	DIA.	MATERIAL
DMH1	64.35	60.25(CB1)	60.25(CB2)	60.65(CB3)		60.00(DMH7)	28	2.50%	15"	RCP
DMH2	66.50	63.50(AD16)	63.00(RD)	62.00(DMH33)		63.00(DMH3)	15	2.00%	12"	HDPE
						62.00(DMH33)	32	1.25%	15"	HDPE
DMH3	66.28		62.70(DMH2)	62.64(CB5)	62.64(CB6)	61.89(DMH4)	143	0.51%	18"	RCP
DMH4	66.04		62.20(CB7)	61.16(DMH3)		60.66(DMH5)	244	0.50%	24"	RCP
DMH5	66.15	60.95(EX.DMH)	59.44(DMH4)			59.38(DMH6)	124	0.50%	24"	RCP
DMH6	65.25	61.05(CB8)	59.82(CB9)	58.76(DMH5)		58.66(WQ1)	10	0.50%	24"	HDPE
DMH7	64.37	59.30(DMH1)	57.90(ST1)			57.80(DMH8)	59	1.50%	24"	RCP
DMH8	63.85	60.44(CB4)	56.91(DMH7)			56.81(EX.DMH)	13	2.00%	24"	RCP
DMH11	63.07	59.60(CB10)	59.60(CB11)			59.50(DMH12)	40	1.00%	12"	RCP
DMH12	63.30	59.0±(RD–V.I.F.**)	59.10(DMH11)			58.60(DMH13)	33	1.50%	18"	RCP
DMH13	63.55	58.10(12"HDPE)	58.10(18"ROOF)	58.10(DMH12)		57.60(DMH14)	57	0.40%	30"	RCP
DMH14	63.75	59.50(AD17)	59.50(CB12)	57.38(DMH13)		57.28(DMH15)	23	0.40%	30"	RCP
DMH15	64.10	59.08(12"HDPE)	58.08(18"ROOF)	57.19(DMH14)		56.69(DMH16)	24	0.40%	36"	RCP
DMH16	64.20	59.85(CB13)		56.60(DMH15)		56.50(DMH17)	33	0.40%	36"	RCP
DMH17	64.45	56.37(DMH16)				56.27(DMH23)	73	0.40%	36"	RCP
DMH18	64.90	59.50(AD2)	59.75(8"ROOF)	59.20(15"ROOF)		58.95(DMH19)	40	0.50%	18"	HDPE
DMH19	64.65	59.50(AD4)	58.75(DMH18)			58.25(DMH20)	46	0.50%	24"	HDPE
DMH20	64.65	59.50(AD6)	58.52(ROOF)	58.02(DMH19)		57.92(DMH21)	88	0.50%	24"	HDPE
DMH21	64.10	60.30(AD7)	58.08(ROOF)	57.48(DMH20)		56.98(DMH22)	59	0.50%	30"	HDPE
DMH22	64.12	60.36(AD8)	57.58(ROOF)	56.68(DMH21)		56.58(DMH23)	39	0.50%	30"	HDPE
DMH23	64.36	56.38(DMH22)	55.98(DMH17)			55.48(DMH24)	64	0.40%	42"	HDPE
DMH24	64.05	60.37(AD10)	60.11(CB15)	55.22(DMH23)		55.12(DMH30)	73	0.40%	42"	HDPE
DMH25	62.95	59.05(CB16)	58.50(18"ROOF)			58.00(DMH26)	120	0.50%	24"	RCP
DMH26	62.28	58.40(18"ROOF)	57.40(DMH25)			56.90(DMH27)	163	0.50%	30"	RCP
DMH27	63.10	56.09(DMH26)				56.04(DMH28)	115	0.50%	30"	RCP
DMH28	64.10	59.80(ROOF)	59.80(AD12)	55.46(DMH27)		55.41(DMH29)	41	0.50%	36"	HDPE
DMH29	63.85	60.00(AD13)	60.00(ROOF)	58.10(AD15)	55.21(DMH28)	55.11(DMH30)	58	0.50%	36"	HDPE
DMH30	64.05	54.82(DMH24)	54.82(DMH29)			54.55(DMH31)	14	0.40%	54"	HDPE
DMH31	63.75	54.50(DMH30)				53.00(WQ2)	5	2.00%	18"	HDPE
						50.50(DETENTION SYSTEM)	18	2.00%	54"	HDPE
DMH32	62.12	57.50 (6"UNDERDRAIN x2)	57.85(CB18)	57.07(CB19)	47.90(D.S.#1)	46.30	40	2.00%	30"	RCP
DMH33	66.70	61.60(DMH2)				61.50 (ISOLATOR ROW)			12"	HDPE
						62.50 (MANIFOLD)			12"	HDPE

NOTE:
1. HDPE DRAINAGE PIPE SHALL BE CORRUGATED HIGH DENSITY POLYETHYLENE (HDPE) WITH SMOOTH INTERIOR WALL.
2. ALL DRAINAGE PIPES IN THE PUBLIC WAY / CITY EASEMENT SHALL BE CLASS III RCP UNLESS DETERMINE OTHERWISE BY CITY ENGINEER.
3. ** VERIFY IN FIELD (V.I.F.)

PROPOSED CATCH BASINS

STRUCTURE	RIM	INVERT OUT	LENGTH	SLOPE	DIA.	MATERIAL
CB1*	64.20	60.69(DMH1)	88	0.50%	12"	RCP
CB2*	64.25	60.65(DMH1)	20	2.00%	12"	RCP
CB3*	64.25	60.75(DMH1)	5	2.00%	12"	RCP
CB4*	63.80	60.50(DMH8)	3	2.00%	12"	RCP
CB5**	66.00	62.75(DMH3)	8	1.37%	12"	RCP
CB6	66.50	63.00(DMH3)	21	1.71%	12"	RCP
CB7**	65.75	62.50(DMH4)	15	2.00%	12"	RCP
CB8	64.50	61.25(DMH6)	10	2.00%	12"	HDPE
CB9	64.00	60.75(DMH6)	185	0.50%	12"	HDPE
CB10	63.05	59.80(DMH11)	20	1.00%	12"	RCP
CB11	63.00	59.75(DMH11)	3	5.00%	12"	RCP
CB12	63.65	59.65(DMH14)	3	5.00%	12"	RCP
CB13	64.00	60.15(DMH16)	15	2.00%	12"	RCP
CB15	63.75	60.25(DMH24)	7	2.00%	12"	HDPE
CB16	62.45	59.45(DMH25)	80	0.50%	10"	DUCTILE IRON
CB17*	61.85	58.60(EX8"VC)	15	2.00% V.I.F.	8"	DUCTILE IRON
CB18*	61.85	58.35(DMH32)	25	2.00%	12"	HDPE
CB19*	61.85	58.35(DMH32)	128	1.0%	12"	HDPE

* DENOTES WATER QUALITY INLET
** DENOTES DOUBLE GRATE

STRUCTURE	VERTSENTRY MODEL
CB1*	VSHS36
CB2*	VSHS36
CB3*	VSHS36
CB4*	VSHS36
CB17*	VSHS36
CB18*	VSHS36
CB19*	VSHS36

PROPOSED WATER QUALITY STRUCTURES

STRUCTURE	TYPE	RIM	INV. IN	INV. OUT	LENGTH	SLOPE	DIA.	MAT.
WQ1	CDS2025–5	65.00	58.61(DMH6)	58.51(ST1)	5	4.00%	24"	HDPE
WQ2	VORTECHS VX9000	63.50±	52.90(DMH31)	52.65(DETENTION SYSTEM)	25	2.00%	18"	HDPE

PROPOSED AREA DRAINS

STRUCTURE	RIM	INVERT IN	INVERT OUT	LENGTH	SLOPE	DIA.	MATERIAL
AD1	64.60		60.96(AD2)	51	2.00%	12"	HDPE
AD2	64.70	59.94(AD1)	59.84(DMH18)	17	2.00%	12"	HDPE
AD3	64.50		60.68(AD4)	42	2.00%	12"	HDPE
AD4	64.50	59.84(AD3)	59.74(DMH19)	12	2.00%	12"	HDPE
AD5	64.50		60.68(AD6)	42	2.00%	12"	HDPE
AD6	64.50	59.84(AD5)	59.74(DMH20)	12	2.00%	12"	HDPE
AD7	64.00		60.50(DMH21)	4	5.00%	12"	HDPE
AD8	64.00		60.50(DMH18)	7	2.00%	12"	HDPE
AD9	64.00		60.50(36"RCP)	3	2.00%	12"	HDPE
AD10	63.95		60.45(DMH24)	4	2.00%	12"	HDPE
AD11	63.95		60.74(AD12)	50	1.00%	12"	HDPE
AD12	63.95	60.24(AD11)	60.14(DMH28)	34	1.00%	12"	HDPE
AD13	63.50		60.50(TEE)	6	2.00%	12"	HDPE
AD14	TBD		60.00(AD15)	40	2.00%	12"	HDPE
AD15	TBD	59.20(AD14)	59.10(DMH29)	50	2.00%	12"	HDPE
AD16	66.75		64.58(DMH2)	54	2.00%	12"	HDPE
AD17	64.50		61.30(DMH14)	90	2.00%	12"	HDPE

LEGEND:

DRAIN MANHOLE	
CATCH BASIN	
WATER QUALITY UNIT	
DRAIN LINE	
1' CONTOUR	128
PROPOSED SPOT GRADE	x 128.00
EXISTING SPOT GRADE	x 120.50
SAW–CUT LINE	
SLOPE DIRECTION	⇐
PERFORATED UNDERDRAIN	UD
SOLID UNDERDRAIN	SUD
INFILTRATION CHAMBERS	
EG	EXISTING GRADE
RE	REFUSAL ELEVATION

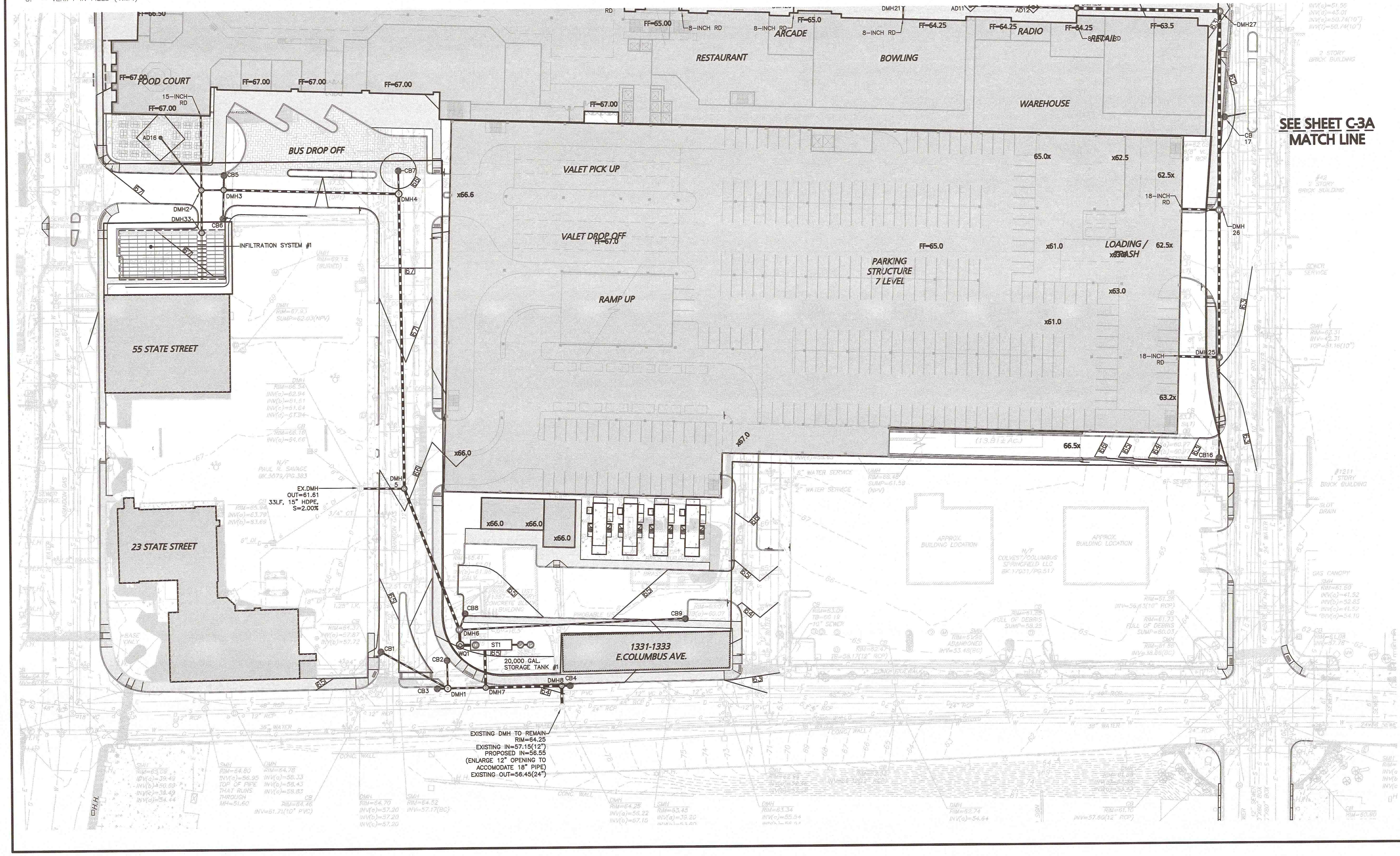

NOTES:

1. THE CONTRACTOR IS SPECIFICALLY CAUTIONED THAT THE LOCATION AND/OR ELEVATION OF EXISTING UTILITIES AND STRUCTURES AS SHOWN ON THESE PLANS IS BASED ON RECORDS OF VARIOUS UTILITY COMPANIES AND WHERE POSSIBLE, MEASUREMENTS TAKEN IN THE FIELD. THIS INFORMATION IS NOT TO BE RELIED ON AS BEING EXACT OR COMPLETE. THE LOCATION OF ALL UNDERGROUND UTILITIES AND STRUCTURES SHALL BE VERIFIED IN THE FIELD BY THE CONTRACTOR PRIOR TO THE START OF CONSTRUCTION. THE CONTRACTOR MUST CONTACT THE APPROPRIATE UTILITY COMPANY, ANY GOVERNING PERMITTING AUTHORITY, AND "DIGSAFE" AT LEAST 72 HOURS PRIOR TO ANY EXCAVATION WORK TO REQUEST EXACT FIELD LOCATION OF UTILITIES AND THE ENGINEER SHALL BE NOTIFIED IN WRITING OF ANY UTILITIES INTERFERING WITH THE PROPOSED CONSTRUCTION AND APPROPRIATE REMEDIAL ACTION TAKEN BEFORE PROCEEDING WITH THE WORK. IT SHALL BE THE RESPONSIBILITY OF THE CONTRACTOR TO RELOCATE ALL EXISTING UTILITIES WHICH CONFLICT WITH THE PROPOSED IMPROVEMENTS SHOWN ON THE PLANS AT NO ADDITIONAL COST.
2. THE CONTRACTOR SHALL CONTACT "DIGSAFE" AND THE CITY OF SPRINGFIELD DEPARTMENT OF PUBLIC WORKS AT LEAST 72 HOURS PRIOR TO ANY EXCAVATION WORK TO REQUEST THE LOCATION OF THE EXISTING UTILITIES.
   - DIGSAFE: 1–800–344–7233
   - SPRINGFIELD SEWER & WATER COMMISSION: 1–413–787–6256
   - SPRINGFIELD DEPARTMENT OF PUBLIC WORKS: 1–413–787–6260
3. SEE THE ABBREVIATIONS AND NOTES PLAN, SHEET ABB–1 FOR EROSION CONTROL NOTES AND DETAIL SHEET FOR CITY OF SPRINGFIELD NOTES.
4. CONTRACTOR TO DEWATER ONSITE ONLY. NO DEWATERING CAN OUTLET TO EXISTING DRAINAGE OR TO CITY OF SPRINGFIELD STREET DRAINAGE.
5. THE INFORMATION SHOWN ON THIS PLAN IS THE SOLE PROPERTY OF ALLEN & MAJOR ASSOCIATES, INC. IT'S INTENDED USE IS TO PROVIDE INFORMATION. ANY ALTERATION, MISUSE, OR RECALCULATION OF INFORMATION OR DATA WITHOUT THE EXPRESSED, WRITTEN CONSENT OF ALLEN & MAJOR ASSOCIATES, INC. IS STRICTLY PROHIBITED.
6. THE LOCATIONS OF EXISTING UNDERGROUND UTILITIES ARE SHOWN IN AN APPROXIMATE WAY ONLY AND HAVE NOT BEEN INDEPENDENTLY VERIFIED BY THE OWNER OR IT'S REPRESENTATIVE. THE CONTRACTOR SHALL DETERMINE THE EXACT LOCATION OF ALL EXISTING UTILITIES BEFORE COMMENCING WORK, AND AGREES TO BE FULLY RESPONSIBLE FOR ANY AND ALL DAMAGES WHICH MIGHT BE OCCASIONED BY THE CONTRACTOR'S FAILURE TO EXACTLY LOCATE AND PRESERVE ANY AND ALL UNDERGROUND UTILITIES.
7. GRADING / DEMOLITION OUTSIDE OF THE PROJECT BOUNDARIES REQUIRES A TEMPORARY CONSTRUCTION/GRADING EASEMENT FROM THE LANDOWNER (BY OTHERS).
8. THE CONTRACTOR IS HEREBY NOTIFIED THAT ADDITIONAL REQUIREMENTS BEYOND WHAT IS SPECIFIED WITHIN THESE DRAWINGS MAY BE LISTED WITHIN THE SWSC PERMIT. THE CONTRACTOR SHALL HAVE ON–SITE A COPY OF ALL PERMITS FOR REFERENCE AND SHALL BE RESPONSIBLE FOR STRICT ADHERENCE.
9. THE CONTRACTOR WILL BE RESPONSIBLE FOR ALL NECESSARY DEMOLITION WORK TO COMPLETE THE PROJECT. ALLEN & MAJOR ASSOCIATES, INC. IS NOT RESPONSIBLE FOR SITE DEMOLITION ITEMS NOT SHOWN ON THE SURVEY, OR SPECIFICALLY NOTED.
10. SILT SACKS SHALL BE INSTALLED IN ALL EXISTING AND PROPOSED CATCH BASINS AND REMAIN UNTIL STRUCTURE IS EITHER REMOVED OR SITE AND BUILDING CONSTRUCTION HAS BEEN COMPLETED.
11. ALL ELEVATIONS REFER TO NAVD '88.
12. PIPE DIMENSIONS ARE MEASURED FROM THE INSIDE FACE OF THE STRUCTURE.
13. UTILITIES SHOWN FOR COORDINATION PURPOSES. CONTRACTOR TO COORDINATE WITH UTILITY PROVIDER & CITY OF SPRINGFIELD TO CONFIRM EXISTING CAPACITY, FINAL LOCATION AND SIZING, AND MEET STANDARDS FOR PROPOSED UTILITY SERVICE.
14. CONTRACTOR TO TRENCH PATCH PER CITY OF SPRINGFIELD UTILITY AND PAVEMENT REQUIREMENTS, TYP. CLEANLY SAWCUT ALL UTILITY TRENCHING AREAS. EXISTING SIDEWALK AND CURBS TO BE REMOVED AND REPLACED WITH NEW CURBING AND SIDEWALK THAT SMOOTHLY MEETS EXISTING LINE AND GRADES.
15. ALTHOUGH CERTAIN ITEMS HAVE BEEN NOTED ON THIS DRAWING FOR DEMOLITION, NO ATTEMPT HAS BEEN MADE TO DELINEATE EACH AND EVERY ITEM THAT REQUIRES DEMOLITION FOR THE COMPLETION OF THE PROJECT. THE CONTRACTOR WILL BE RESPONSIBLE FOR ALL NECESSARY DEMOLITION WORK TO COMPLETE THE PROJECT. ALLEN & MAJOR ASSOCIATES, INC. IS NOT RESPONSIBLE FOR SITE DEMOLITION ITEMS NOT SHOWN ON THE SURVEY, OR SPECIFICALLY NOTED. THE DEMOLITION NOTES AND ARROWS ON THIS PLAN ARE TYPICAL AND DO NOT REFLECT QUANTITY.
16. CONTRACTOR SHALL PERFORM FIELD INVESTIGATIONS TO VERIFY WHICH MAIN ALL CATCH BASINS WITHIN UNION STREET ARE CONNECTED TO. IF NOT ALREADY, ALL CATCH BASINS SHALL BE CONNECTED TO THE 60–INCH BY 80–INCH DRAINAGE MAIN.

DIG SAFE
BEFORE YOU DIG
CALL 811 OR
1–888–DIG–SAFE
1–888–344–7233

GRAPHIC SCALE
40 0 20 40 80 160
(IN FEET)
1 inch = 40 ft.

N:\PROJECTS\1839–02\CIVIL\DRAWINGS\CURRENT\C–1839–02 – GRADING & DRAINAGE.DWG

ENGINEER:

ALLEN & MAJOR ASSOCIATES, INC.
civil & structural engineering • land surveying
environmental consulting • landscape architecture
www.allenmajor.com
100 COMMERCE WAY
P.O. BOX 2118
WOBURN MA 01888-0118
TEL: (781) 935-6889
FAX: (781) 935-2896
WOBURN, MA • LAKEVILLE, MA • MANCHESTER, NH

SEAL:

COMMONWEALTH OF MASSACHUSETTS
TIMOTHY J. WILLIAMS
CIVIL
No.43119
REGISTERED PROFESSIONAL ENGINEER
10/23/15

CONSULTANT:

OWNER:

MGM RESORTS INTERNATIONAL
3260 Industrial Road, Las Vegas,NV 89109
702.692.9622 Phone 702.862.1750 Fax

MGM SPRINGFIELD
SPRINGFIELD, MA

PROJECT:
MGM SPRINGFIELD - SITE/CIVIL RECORD

REVISIONS:

NO.	DATE	ISSUE
1	10/23/15	SITE PLAN APPROVAL

THIS DRAWING HAS BEEN PREPARED IN ELECTRONIC FORMAT. CLIENT/CLIENT'S REPRESENTATIVE OR CONSULTANT MAY BE PROVIDED COPIES OF DRAWINGS AND SPECIFICATIONS ON MAGNETIC MEDIA FOR HIS/HER INFORMATION AND USE FOR SPECIFIC APPLICATION TO THIS PROJECT. DUE TO THE POTENTIAL THAT THE MAGNETIC INFORMATION MAY BE MODIFIED UNINTENTIONALLY OR OTHERWISE, ALLEN & MAJOR ASSOCIATES, INC. MAY REMOVE ALL INDICATION OF THE DOCUMENT'S AUTHORSHIP ON THE MAGNETIC MEDIA. PRINTED REPRESENTATIONS OF THE DRAWINGS AND SPECIFICATIONS ISSUED SHALL BE THE ONLY RECORD COPIES OF ALLEN & MAJOR ASSOCIATES, INC.'S WORK PRODUCT.

Copyright 2015 Allen & Major Associates, Inc. All Rights Reserved

DRAWING TITLE:

PROPOSED GRADING & DRAINAGE PLAN

All dimensions, levels, layouts and field conditions shall be verified at the site by the contractor before proceeding with the work.

MRID Project No.	58012MASS
Consultant Project No.	1839-02D
Date:	08/14/2015

Drawn By	Checked By	Approved By
KEA	TJW	TJW

File Name: C1839-02D

C-2B

NOTES:

1. THE CONTRACTOR IS SPECIFICALLY CAUTIONED THAT THE LOCATION AND/OR ELEVATION OF EXISTING UTILITIES AND STRUCTURES AS SHOWN ON THESE PLANS IS BASED ON RECORDS OF VARIOUS UTILITY COMPANIES AND WHERE POSSIBLE, MEASUREMENTS TAKEN IN THE FIELD. THIS INFORMATION IS NOT TO BE RELIED ON AS BEING EXACT OR COMPLETE. THE LOCATION OF ALL UNDERGROUND UTILITIES AND STRUCTURES SHALL BE VERIFIED IN THE FIELD BY THE CONTRACTOR PRIOR TO THE START OF CONSTRUCTION. THE CONTRACTOR MUST CONTACT THE APPROPRIATE UTILITY COMPANY, ANY GOVERNING PERMITTING AUTHORITY, AND "DIGSAFE" AT LEAST 72 HOURS PRIOR TO ANY EXCAVATION WORK TO REQUEST EXACT FIELD LOCATION OF UTILITIES AND THE ENGINEER SHALL BE NOTIFIED IN WRITING OF ANY UTILITIES INTERFERING WITH THE PROPOSED CONSTRUCTION AND APPROPRIATE REMEDIAL ACTION TAKEN BEFORE PROCEEDING WITH THE WORK. IT SHALL BE THE RESPONSIBILITY OF THE CONTRACTOR TO RELOCATE ALL EXISTING UTILITIES WHICH CONFLICT WITH THE PROPOSED IMPROVEMENTS SHOWN ON THE PLANS.
2. ALL ELEVATIONS REFER TO NAVD '88.
3. THE SANITARY SEWER FLOW WITHIN THE MUNICIPAL TRUNKLINE SHALL NOT BE INTERRUPTED DURING ANY PART OF THE PROPOSED SITE WORK.
4. BUILDING WATER/GAS/SEWER/ELECTRIC SERVICE SIZE AND LOCATIONS TO BE BASED ON FINAL BUILDING PLANS. CONNECTION POINTS SHALL BE AS SHOWN HEREON.
5. PIPE DIMENSIONS ARE MEASURED FROM THE INSIDE FACE OF THE STRUCTURE.
6. UTILITIES SHOWN FOR COORDINATION PURPOSES. CONTRACTOR TO COORDINATE WITH UTILITY PROVIDER & CITY OF SPRINGFIELD TO CONFIRM EXISTING CAPACITY, FINAL LOCATION AND SIZING, AND MEET STANDARDS FOR PROPOSED UTILITY SERVICE.
7. CONTRACTOR TO TRENCH PATCH PER CITY OF SPRINGFIELD UTILITY AND PAVEMENT REQUIREMENTS, TYP. CLEANLY SAWCUT ALL UTILITY TRENCHING AREAS. EXISTING SIDEWALK AND CURBS TO BE REMOVED AND REPLACED WITH NEW CURBING AND SIDEWALK THAT SMOOTHLY MEETS EXISTING LINE AND GRADES.
8. ALTHOUGH CERTAIN ITEMS HAVE BEEN NOTED ON THIS DRAWING FOR DEMOLITION, NO ATTEMPT HAS BEEN MADE TO DELINEATE EACH AND EVERY ITEM THAT REQUIRES DEMOLITION FOR THE COMPLETION OF THE PROJECT. THE CONTRACTOR WILL BE RESPONSIBLE FOR ALL NECESSARY DEMOLITION WORK TO COMPLETE THE PROJECT. ALLEN & MAJOR ASSOCIATES, INC. IS NOT RESPONSIBLE FOR SITE DEMOLITION ITEMS NOT SHOWN ON THE SURVEY, OR SPECIFICALLY NOTED. THE DEMOLITION NOTES AND ARROWS ON THIS PLAN ARE TYPICAL AND DO NOT REFLECT QUANTITY.
9. THE INFORMATION SHOWN ON THIS PLAN IS THE SOLE PROPERTY OF ALLEN & MAJOR ASSOCIATES, INC. IT'S INTENDED USE IS TO PROVIDE INFORMATION. ANY ALTERATION, MISUSE, OR RECALCULATION OF INFORMATION OR DATA WITHOUT THE EXPRESSED, WRITTEN CONSENT OF ALLEN & MAJOR ASSOCIATES, INC. IS STRICTLY PROHIBITED.
10. CONTRACTOR TO COORDINATE ALL WORK WITHIN ADJACENT STREETS WITH SPRINGFIELD WATER AND SEWER COMMISSION (SWSC) AND THE SPRINGFIELD DEPARTMENT OF PUBLIC WORKS (DPW).
11. PROPOSED HYDRANTS SHALL BE APPROVED BY THE SPRINGFIELD WATER AND SEWER COMMISSION AND THE SPRINGFIELD FIRE DEPARTMENT.
12. PIPE TO BE CLASS 350 DUCTILE IRON WITH PUSH-ON JOINTS AND FIELD LOCATED GASKETS.
13. SHUT DOWN OF THE EXISTING 24-INCH WATER MAIN IN UNION STREET AND EXISTING 36-INCH WATER MAIN IN EAST COLUMBUS STREET SHALL BE COORDINATED WITH THE SWSC. SWSC MAY REQUIRE ADDITIONAL RESTRICTIONS ON WHEN/IF THE 36-INCH WATER MAIN MAY BE SHUT DOWN.
14. THERE SHALL BE A 4-FOOT OFFSET FROM THE OUTSIDE OF A WATER OR SANITARY/SEWER MAIN AND ANY OTHER UNDERGROUND UTILITY.
15. ALL NEW PUBLIC SANITARY MANHOLES SHALL BE 5-FEET DIAMETER WITH 32-INCH FRAME & COVER AND SHALL BE ACCORDING TO SWSC STANDARD DETAILS INCLUDING BRICK INVERTS, UNLESS OTHERWISE NOTED. CONCRETE INVERTS ARE NOT ALLOWED.
16. SANITARY SEWER PIPES LABELED SANITARY SERVICE ARE OWNED, OPERATED, AND MAINTAINED BY THE PROPERTY OWNER.
17. APPROVAL OF CURE WATER DISCHARGE TO THE EXISTING COMBINED SEWER SYSTEM WILL BE ALLOWED PROVIDED SUCH DISCHARGE SHALL BE CONDUCTED AT A RATE NOT TO EXCEED 200 GALLONS/MINUTE. CURE-WATER SHALL NOT BE DISCHARGED TO THE SWSC COMBINED SEWER SYSTEM IF TOTAL TOXIC ORGANICS (TTO) LEVELS EXCEED THE SWSC INDUSTRIAL DISCHARGE PERMIT LIMIT OF 2.13 PPM PER EPA TEST METHOD 1624C OR IF TOTAL VOLATILE ORGANIC COMPOUNDS (VOCS) EXCEED THE SWSC INDUSTRIAL DISCHARGE PERMIT LIMIT OF 0.5 MG/L. THE OWNER RESERVES THE RIGHT TO REQUIRE THAT THE CONTRACTOR SUBMIT CERTIFIED LAB RESULTS INDICATING THAT THESE LIMITS ARE NOT EXCEEDED PRIOR TO APPROVAL OF THE DISCHARGE OF CURE-WATER TO THE COMBINED SEWER SYSTEM, AT NO ADDITIONAL COST TO THE OWNER.
18. CONTRACTOR SHALL NOTIFY ENGINEER AND SPRINGFIELD DPW OF ANY UTILITY CONFLICTS WITH PROPOSED HYDRANT LOCATIONS.
19. HYDRANTS SHALL INSTALLED TO MEET AMERICANS WITH DISABILITIES ACT (ADA) ACCESS REQUIREMENTS. CONTRACTOR SHALL NOTIFY ENGINEER AND SPRINGFIELD DPW OF ANY CONFLICTS.
20. FIRE HYDRANTS SHALL MEET SPRINGFIELD FIRE DEPARTMENT REQUIREMENTS.
21. STATE STREET SEWER SERVICES CONNECTED TO THE SEWER MAIN, PROPOSED FOR REPLACEMENT, SHALL BE REPLACED TO THE BACK OF SIDEWALK OR BACK FOR BUILDING, AS APPROPRIATE, IF THE BUILDING IS ON THE BACK OF WALK.
22. ALL BARE STEEL TO CORROSION PROTECTION IN ACCORDANCE WITH SWSC GUIDELINES & POLICIES & MATERIAL SPECIFICATIONS.
23. ALL EXISTING WATER SERVICE & FIRE SERVICE SHALL BE NEW TO STREET LINE.
24. SPECIAL CONSIDERATION FOR SUPPORT OF EXCAVATION, AT LOCATIONS SHOWN ON THE CONTRACT DOCUMENTS, SHALL BE REQUIRED WHEN PASSING BELOW, OR DIRECTLY ADJACENT TO, EXISTING UTILITIES WHERE SUCH UTILITIES WILL POTENTIALLY BE ADVERSELY IMPACTED DURING EXCAVATION. SPECIAL SUPPORT OF EXCAVATION SHALL INCLUDE BUT IS NOT LIMITED TO STEEL SHEETING LEFT IN PLACE, SOLDIER PILES AND LAGGING LEFT IN PLACE, AND/OR AN EQUIVALENT SUPPORT OF EXCAVATION METHOD PRESENTED TO AND APPROVED BY THE ENGINEER.
25. REFER TO PROPOSED WATER PLAN SHEETS C-3C AND C-3D FOR ADDITIONAL WATER LAYOUT, MATERIALS AND REQUIREMENTS.
26. AS SHOWN ON PLANS, EXISTING UNION STREET SEWER MANHOLES SHALL BE REHABBED ACCORDING TO SWSC REQUIREMENTS INCLUDING, BUT NOT LIMITED TO, CEMENTITIOUS LINING, AND EPOXY LINING AS NEEDED, BASED UPON THE MACP INSPECTIONS.

PROPOSED SEWER MANHOLES

STRUCTURE	RIM	INVERT IN	INVERT IN	INVERT OUT	LENGTH	SLOPE	DIA.	MATERIAL
SMH#1	65.50	55.34(GARAGE)		55.24	135	2.00%	12"	PVC
SMH#2	64.10	54.79(BLDG)	53.29(SMH#3)	53.19	219	1.00%	12"	PVC
SMH#3	65.10	56.08(BLDG V.I.F.)	54.58(SMH#4)	54.48	119	1.00%	12"	PVC
SMH#4	64.50	56.40(BLDG)	54.88(SMH#5)	54.79	20	1.00%	8"	PVC
SMH#5	64.25	57.85(BLDG)		57.75	287	1.00%	8"	PVC
SMH#7	62.61	50.74(EXIST. SMH)		50.64	262	EXIST.	10"	VCP*
SMH#8	63.61	50.33(GARAGE)	50.33(SMH#7)	50.23	276	EXIST.	10"	VCP*
SMH#9	61.60	61.60(CO#4)		41.42	40	V.I.F.**	12"	PVC

NOTE:
1. VCP* = EXISTING 10" VCP SEWER MAIN TO BE REHABBED WITH CURED-IN-PLACE SYSTEM.
2. V.I.F. ** = INVERT AT EXISTING BULKHEAD. TO BE FIELD DETERMINED.

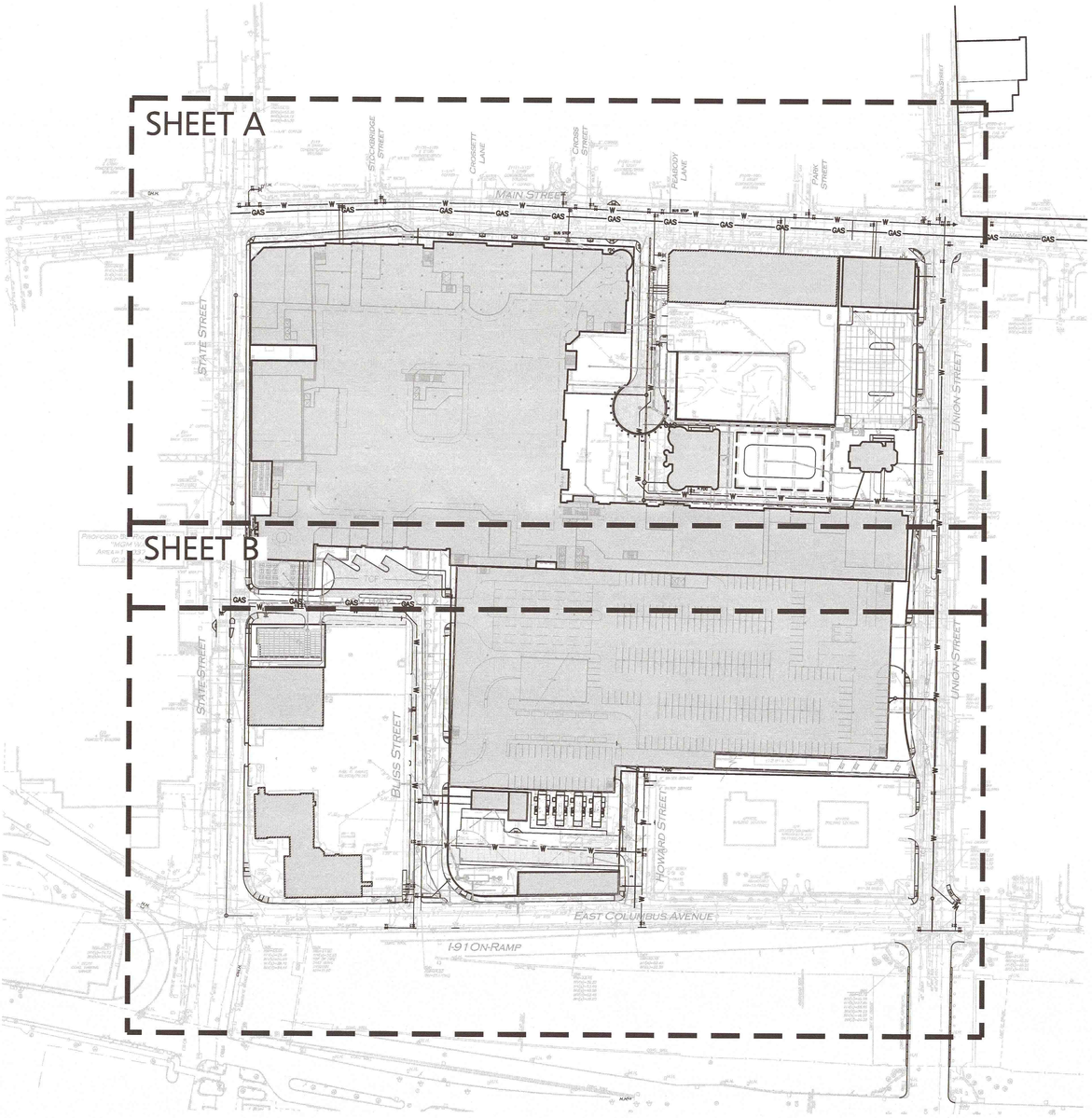

LEGEND:

PROPERTY LINE	
SEWER MANHOLE	S
SEWER CLEANOUT	C
SEWER VENT	V
SEWER LINE	
CONCRETE PIPE ENCASEMENT	
WATER LINE	W
WATER VALVE	WV
HYDRANT	H
GAS VALVE	GV
GAS LINE	GAS
WATER LINE REDUCER	

ABBREVIATIONS:

AIR VALVE ASSEMBLY	AVA
AIR CORP	AC
GATE VALVE	GV
MECHANICAL JOINT	MJ
MANHOLE	MH
COPPER TYPE	CT
WATER SERVICE	WS
FIRE SERVICE	FS
STREET LINE	℄
COPPER TO COPPER	C TO C
VERIFY IN FIELD	V.I.F.
BUILDING	BLDG
CLEAN OUT	CO

DIG SAFE

BEFORE YOU DIG
CALL 811 OR
1-888-DIG-SAFE
1-888-344-7233

GRAPHIC SCALE

60 0 40 80 160 320

(IN FEET)
1 inch = 80 ft.

N:\PROJECTS\1839-02\CIVIL\DRAWINGS\CURRENT\C-1839-02 - UTILITY.DWG

ENGINEER :

ALLEN & MAJOR ASSOCIATES, INC.
CIVIL & structural engineering land surveying
transportation planning & traffic engineering
100 Grandview Road, Suite 204
Braintree, MA 02184
Tel: (781) 843-0820
Fax: (781) 843-0888
www.allenmajor.com
WOBURN, MA • LAKEVILLE, MA • MANCHESTER, NH

SEAL:

COMMONWEALTH OF MASSACHUSETTS
TIMOTHY J. WILLIAMS
CIVIL
No. 43119
REGISTERED PROFESSIONAL ENGINEER

CONSULTANT:

OWNER :

MGM RESORTS INTERNATIONAL
3260 Industrial Road, Las Vegas,NV 89109
702.692.9622 Phone 702.862.1750 Fax

SPRINGFIELD
SPRINGFIELD, MA

PROJECT:
MGM SPRINGFIELD - SITE/CIVIL RECORD

REVISIONS :

NO.	DATE	ISSUE
1	10/23/15	SITE PLAN APPROVAL

THIS DRAWING HAS BEEN PREPARED IN ELECTRONIC FORMAT. CLIENT/CLIENT'S REPRESENTATIVE OR CONSULTANT MAY BE PROVIDED COPIES OF DRAWINGS AND SPECIFICATIONS ON MAGNETIC MEDIA FOR INFORMATIONAL PURPOSES RELATIVE TO THIS APPLICATION TO THIS PROJECT. DUE TO THE POTENTIAL THAT THE MAGNETIC INFORMATION MAY BE MODIFIED UNINTENTIONALLY OR OTHERWISE, ALLEN & MAJOR ASSOCIATES, INC. MAY REMOVE ALL INDICATION OF THE DOCUMENT'S AUTHORSHIP ON THE MAGNETIC MEDIA. THE DRAWINGS AND SPECIFICATIONS ON THE MAGNETIC AND SPECIFICATIONS ISSUED SHALL BE THE ONLY RECORD COPIES OF ALLEN & MAJOR ASSOCIATES, INC'S WORK PRODUCT.

Copyright 2015 Allen & Major Associates, Inc.
All Rights Reserved

DRAWING TITLE :

PROPOSED OVERALL UTILITY PLAN

All dimensions, levels, layouts and field conditions shall be verified at the site by the contractor before proceeding with the work.

MRID Project No.	58012MASS
Consultant Project No.	1839-02D
Date:	08/14/2015

Drawn By	Checked By	Approved By
KEA	TJW	TJW

File Name: C1839-02D

C-3

NOTES:

1. THE CONTRACTOR IS SPECIFICALLY CAUTIONED THAT THE LOCATION AND/OR ELEVATION OF EXISTING UTILITIES AND STRUCTURES AS SHOWN ON THESE PLANS IS BASED ON RECORDS OF VARIOUS UTILITY COMPANIES AND WHERE POSSIBLE, MEASUREMENTS TAKEN IN THE FIELD. THIS INFORMATION IS NOT TO BE RELIED ON AS BEING EXACT OR COMPLETE. THE LOCATION OF ALL UNDERGROUND UTILITIES AND STRUCTURES SHALL BE VERIFIED IN THE FIELD BY THE CONTRACTOR PRIOR TO THE START OF CONSTRUCTION. THE CONTRACTOR MUST CONTACT THE APPROPRIATE UTILITY COMPANY, ANY GOVERNING PERMITTING AUTHORITY, AND "DIGSAFE" AT LEAST 72 HOURS PRIOR TO ANY EXCAVATION WORK TO REQUEST EXACT FIELD LOCATION OF UTILITIES AND THE ENGINEER SHALL BE NOTIFIED IN WRITING OF ANY UTILITIES INTERFERING WITH THE PROPOSED CONSTRUCTION AND APPROPRIATE REMEDIAL ACTION TAKEN BEFORE PROCEEDING WITH THE WORK. IT SHALL BE THE RESPONSIBILITY OF THE CONTRACTOR TO RELOCATE ALL EXISTING UTILITIES WHICH CONFLICT WITH THE PROPOSED IMPROVEMENTS SHOWN ON THE PLANS.
2. ALL ELEVATIONS REFER TO NAVD '88.
3. THE SANITARY SEWER FLOW WITHIN THE MUNICIPAL TRUNKLINE SHALL NOT BE INTERRUPTED DURING ANY PART OF THE PROPOSED SITE WORK.
4. BUILDING WATER/GAS/SEWER/ELECTRIC SERVICE SIZE AND LOCATIONS TO BE BASED ON FINAL BUILDING PLANS. CONNECTION POINTS SHALL BE AS SHOWN HEREON.
5. PIPE DIMENSIONS ARE MEASURED FROM THE INSIDE FACE OF THE STRUCTURE.
6. UTILITIES SHOWN FOR COORDINATION PURPOSES. CONTRACTOR TO COORDINATE WITH UTILITY PROVIDER & CITY OF SPRINGFIELD TO CONFIRM EXISTING CAPACITY, FINAL LOCATION AND SIZING, AND MEET STANDARDS FOR PROPOSED UTILITY SERVICE.
7. CONTRACTOR TO TRENCH PATCH PER CITY OF SPRINGFIELD UTILITY AND PAVEMENT REQUIREMENTS, TYP. CLEANLY SAWCUT ALL UTILITY TRENCHING AREAS. EXISTING SIDEWALK AND CURBS TO BE REMOVED AND REPLACED WITH NEW CURBING AND SIDEWALK THAT SMOOTHLY MEETS EXISTING LINE AND GRADES.
8. ALTHOUGH CERTAIN ITEMS HAVE BEEN NOTED ON THIS DRAWING FOR DEMOLITION, NO ATTEMPT HAS BEEN MADE TO DELINEATE EACH AND EVERY ITEM THAT REQUIRES DEMOLITION FOR THE COMPLETION OF THE PROJECT. THE CONTRACTOR WILL BE RESPONSIBLE FOR ALL NECESSARY DEMOLITION WORK TO COMPLETE THE PROJECT. ALLEN & MAJOR ASSOCIATES, INC. IS NOT RESPONSIBLE FOR SITE DEMOLITION ITEMS NOT SHOWN ON THE SURVEY, OR SPECIFICALLY NOTED. THE DEMOLITION NOTES AND ARROWS ON THIS PLAN ARE TYPICAL AND DO NOT REFLECT QUANTITY.
9. THE INFORMATION SHOWN ON THIS PLAN IS THE SOLE PROPERTY OF ALLEN & MAJOR ASSOCIATES, INC. IT'S INTENDED USE IS TO PROVIDE INFORMATION. ANY ALTERATION, MISUSE, OR RECALCULATION OF INFORMATION OR DATA WITHOUT THE EXPRESSED, WRITTEN CONSENT OF ALLEN & MAJOR ASSOCIATES, INC. IS STRICTLY PROHIBITED.
10. CONTRACTOR TO COORDINATE ALL WORK WITHIN ADJACENT STREETS WITH SPRINGFIELD WATER AND SEWER COMMISSION (SWSC) AND THE SPRINGFIELD DEPARTMENT OF PUBLIC WORKS (DPW).
11. PROPOSED HYDRANTS SHALL BE APPROVED BY THE SPRINGFIELD WATER AND SEWER COMMISSION AND THE SPRINGFIELD FIRE DEPARTMENT.
12. PIPE TO BE CLASS 350 DUCTILE IRON WITH PUSH–ON JOINTS AND FIELD LOCATED GASKETS.
13. SHUT DOWN OF THE EXISTING 24–INCH WATER MAIN IN UNION STREET AND EXISTING 36–INCH WATER MAIN IN EAST COLUMBUS STREET SHALL BE COORDINATED WITH THE SWSC. SWSC MAY REQUIRE ADDITIONAL RESTRICTIONS ON WHEN/IF THE 36–INCH WATER MAIN MAY BE SHUT DOWN.
14. THERE SHALL BE A 4–FOOT OFFSET FROM THE OUTSIDE OF A WATER OR SANITARY/SEWER MAIN AND ANY OTHER UNDERGROUND UTILITY.
15. ALL NEW PUBLIC SANITARY MANHOLES SHALL BE 5–FEET DIAMETER WITH 32–INCH FRAME & COVER AND SHALL BE ACCORDING TO SWSC STANDARD DETAILS INCLUDING BRICK INVERTS, UNLESS OTHERWISE NOTED. CONCRETE INVERTS ARE NOT ALLOWED.
16. SANITARY SEWER PIPES LABELED SANITARY SERVICE ARE OWNED, OPERATED, AND MAINTAINED BY THE PROPERTY OWNER.
17. APPROVAL OF CURE WATER DISCHARGE TO THE EXISTING COMBINED SEWER SYSTEM WILL BE ALLOWED PROVIDED SUCH DISCHARGE SHALL BE CONDUCTED AT A RATE NOT TO EXCEED 200 GALLONS/MINUTE. CURE–WATER SHALL NOT BE DISCHARGED TO THE SWSC COMBINED SEWER SYSTEM IF TOTAL TOXIC ORGANICS (TTO) LEVELS EXCEED THE SWSC INDUSTRIAL DISCHARGE PERMIT LIMIT OF 2.13 PPM PER EPA TEST METHOD 1624C OR IF TOTAL VOLATILE ORGANIC COMPOUNDS (VOCS) EXCEED THE SWSC INDUSTRIAL DISCHARGE PERMIT LIMIT OF 0.5 MG/L. THE OWNER RESERVES THE RIGHT TO REQUIRE THAT THE CONTRACTOR SUBMIT CERTIFIED LAB RESULTS INDICATING THAT THESE LIMITS ARE NOT EXCEEDED PRIOR TO APPROVAL OF THE DISCHARGE OF CURE–WATER TO THE COMBINED SEWER SYSTEM, AT NO ADDITIONAL COST TO THE OWNER.
18. CONTRACTOR SHALL NOTIFY ENGINEER AND SPRINGFIELD DPW OF ANY UTILITY CONFLICTS WITH PROPOSED HYDRANT LOCATIONS.
19. HYDRANTS SHALL INSTALLED TO MEET AMERICANS WITH DISABILITIES ACT (ADA) ACCESS REQUIREMENTS. CONTRACTOR SHALL NOTIFY ENGINEER AND SPRINGFIELD DPW OF ANY CONFLICTS.
20. FIRE HYDRANTS SHALL MEET SPRINGFIELD FIRE DEPARTMENT REQUIREMENTS.
21. STATE STREET SEWER SERVICES CONNECTED TO THE SEWER MAIN, PROPOSED FOR REPLACEMENT, SHALL BE REPLACED TO THE BACK OF SIDEWALK OR BACK FOR BUILDING, AS APPROPRIATE, IF THE BUILDING IS ON THE BACK OF WALK.
22. ALL BARE STEEL TO CORROSION PROTECTION IN ACCORDANCE WITH SWSC GUIDELINES & POLICIES & MATERIAL SPECIFICATIONS.
23. ALL EXISTING WATER SERVICE & FIRE SERVICE SHALL BE NEW TO STREET LINE.
24. SPECIAL CONSIDERATION FOR SUPPORT OF EXCAVATION, AT LOCATIONS SHOWN ON THE CONTRACT DOCUMENTS, SHALL BE REQUIRED WHEN PASSING BELOW, OR DIRECTLY ADJACENT TO, EXISTING UTILITIES WHERE SUCH UTILITIES WILL POTENTIALLY BE ADVERSELY IMPACTED DURING EXCAVATION. SPECIAL SUPPORT OF EXCAVATION SHALL INCLUDE BUT IS NOT LIMITED TO STEEL SHEETING LEFT IN PLACE, SOLDIER PILES AND LAGGING LEFT IN PLACE, AND/OR AN EQUIVALENT SUPPORT OF EXCAVATION METHOD PRESENTED TO AND APPROVED BY THE ENGINEER.
25. REFER TO PROPOSED WATER PLAN SHEETS C–3C AND C–3D FOR ADDITIONAL WATER LAYOUT, MATERIALS AND REQUIREMENTS.
26. AS SHOWN ON PLANS, EXISTING UNION STREET SEWER MANHOLES SHALL BE REHABBED ACCORDING TO SWSC REQUIREMENTS INCLUDING, BUT NOT LIMITED TO, CEMENTITIOUS LINING, AND EPOXY LINING AS NEEDED, BASED UPON THE MACP INSPECTIONS.

PROPOSED SEWER MANHOLES

STRUCTURE	RIM	INVERT IN	INVERT IN	INVERT OUT	LENGTH	SLOPE	DIA.	MATERIAL
SMH#1	65.50	55.34(GARAGE)		55.24	135	2.00%	12"	PVC
SMH#2	64.10	54.79(BLDG)	53.29(SMH#3)	53.19	219	1.00%	12"	PVC
SMH#3	65.10	56.08(BLDG V.I.F.)	54.58(SMH#4)	54.48	119	1.00%	12"	PVC
SMH#4	64.50	56.40(BLDG)	54.88(SMH#5)	54.79	20	1.00%	8"	PVC
SMH#5	64.25	57.85(BLDG)		57.75	287	1.00%	8"	PVC
SMH#7	62.61	50.74(EXIST. SMH)		50.64	262	EXIST.	10"	VCP*
SMH#8	63.61	50.33(GARAGE)	50.33(SMH#7)	50.23	276	EXIST.	10"	VCP*
SMH#9	61.60	61.60(CO#4)		41.42	40	V.I.F.**	12"	PVC

NOTE:
1. VCP* – EXISTING 10" VCP SEWER MAIN TO BE REHABBED WITH CURED–IN–PLACE SYSTEM.
2. V.I.F. ** = INVERT AT EXISTING BULKHEAD. TO BE FIELD DETERMINED.

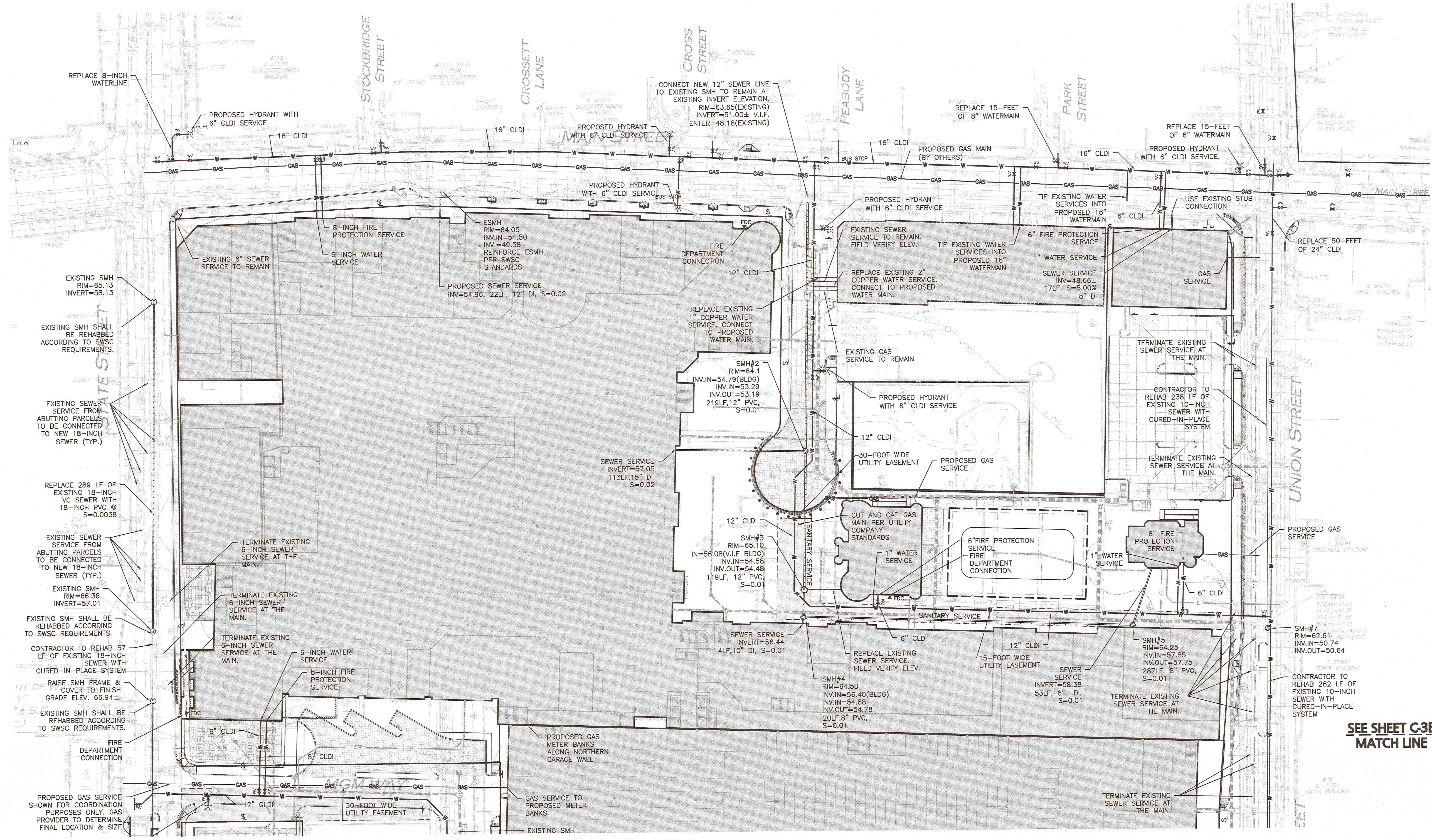

SEE SHEET C-3B MATCH LINE

LEGEND:

PROPERTY LINE	
SEWER MANHOLE	
SEWER CLEANOUT	
SEWER VENT	
SEWER LINE	
CONCRETE PIPE ENCASEMENT	
WATER LINE	—W—
WATER VALVE	WV
HYDRANT	
GAS VALVE	GV
GAS LINE	—GAS—
WATER LINE REDUCER	

ABBREVIATIONS:

AIR VALVE ASSEMBLY	AVA
AIR CORP	AC
GATE VALVE	GV
MECHANICAL JOINT	MJ
MANHOLE	MH
COPPER TYPE	CT
WATER SERVICE	WS
FIRE SERVICE	FS
STREET LINE	$
COPPER TO COPPER	C TO C
VERIFY IN FIELD	V.I.F.
BUILDING	BLDG
CLEAN OUT	CO

DIG SAFE
BEFORE YOU DIG CALL 811 OR 1–888–DIG–SAFE 1–888–344–7233

GRAPHIC SCALE
40 0 20 40 80 160
(IN FEET)
1 inch = 40 ft.

N:\PROJECTS\1839–02\CIVIL\DRAWINGS\CURRENT\C–1839–02 – UTILITY.DWG

ENGINEER :

ALLEN & MAJOR ASSOCIATES, INC.
civil & structural engineering • land surveying
environmental consulting • landscape architecture
www.allenmajor.com
100 COMMERCE WAY
P.O. BOX 2118
WOBURN MA 01888-0118
TEL: (781) 935-6889
FAX: (781) 935-2896
WOBURN, MA • LAKEVILLE, MA • MANCHESTER, NH

SEAL:

COMMONWEALTH OF MASSACHUSETTS
TIMOTHY J. WILLIAMS
CIVIL
No.43119
REGISTERED PROFESSIONAL ENGINEER
10/23/15

CONSULTANT:

OWNER :

MGM RESORTS INTERNATIONAL™
3260 Industrial Road, Las Vegas,NV 89109
702.692.9622 Phone 702.862.1750 Fax

MGM SPRINGFIELD
SPRINGFIELD, MA

PROJECT :
MGM SPRINGFIELD - SITE/CIVIL RECORD

REVISIONS :

NO.	DATE	ISSUE
1	10/23/15	SITE PLAN APPROVAL

THIS DRAWING HAS BEEN PREPARED IN ELECTRONIC FORMAT. CLIENT/CLIENT'S REPRESENTATIVE OR CONSULTANT MAY BE PROVIDED COPIES OF DRAWINGS AND SPECIFICATIONS ON MAGNETIC MEDIA FOR HIS/HER INFORMATION AND USE FOR SPECIFIC APPLICATION TO THIS PROJECT. DUE TO THE POTENTIAL THAT THE MAGNETIC INFORMATION MAY BE MODIFIED UNINTENTIONALLY OR OTHERWISE, ALLEN & MAJOR ASSOCIATES, INC. MAY REMOVE ALL INDICATION OF THE DOCUMENT'S AUTHORSHIP ON THE MAGNETIC MEDIA. PRINTED REPRESENTATIONS OF THE DRAWINGS AND SPECIFICATIONS ISSUED SHALL BE THE ONLY RECORD COPIES OF ALLEN & MAJOR ASSOCIATES, INC.'S WORK PRODUCT.

Copyright 2015 Allen & Major Associates, Inc.
All Rights Reserved

DRAWING TITLE :

PROPOSED UTILITY PLAN

All dimensions, levels, layouts and field conditions shall be verified at the site by the contractor before proceeding with the work.

MRID Project No.	58012MASS
Consultant Project No.	1839-02D
Date:	08/14/2015

Drawn By	Checked By	Approved By
KEA	TJW	TJW

File Name: C1839-02D

C-3A

NOTES:

1. THE CONTRACTOR IS SPECIFICALLY CAUTIONED THAT THE LOCATION AND/OR ELEVATION OF EXISTING UTILITIES AND STRUCTURES AS SHOWN ON THESE PLANS IS BASED ON RECORDS OF VARIOUS UTILITY COMPANIES AND WHERE POSSIBLE, MEASUREMENTS TAKEN IN THE FIELD. THIS INFORMATION IS NOT TO BE RELIED ON AS BEING EXACT OR COMPLETE. THE LOCATION OF ALL UNDERGROUND UTILITIES AND STRUCTURES SHALL BE VERIFIED IN THE FIELD BY THE CONTRACTOR PRIOR TO THE START OF CONSTRUCTION. THE CONTRACTOR MUST CONTACT THE APPROPRIATE UTILITY COMPANY, ANY GOVERNING PERMITTING AUTHORITY, AND "DIGSAFE" AT LEAST 72 HOURS PRIOR TO ANY EXCAVATION WORK TO REQUEST EXACT FIELD LOCATION OF UTILITIES AND THE ENGINEER SHALL BE NOTIFIED IN WRITING OF ANY UTILITIES INTERFERING WITH THE PROPOSED CONSTRUCTION AND APPROPRIATE REMEDIAL ACTION TAKEN BEFORE PROCEEDING WITH THE WORK. IT SHALL BE THE RESPONSIBILITY OF THE CONTRACTOR TO RELOCATE ALL EXISTING UTILITIES WHICH CONFLICT WITH THE PROPOSED IMPROVEMENTS SHOWN ON THE PLANS.
2. ALL ELEVATIONS REFER TO NAVD '88.
3. THE SANITARY SEWER FLOW WITHIN THE MUNICIPAL TRUNKLINE SHALL NOT BE INTERRUPTED DURING ANY PART OF THE PROPOSED SITE WORK.
4. BUILDING WATER/GAS/SEWER/ELECTRIC SERVICE SIZE AND LOCATIONS TO BE BASED ON FINAL BUILDING PLANS. CONNECTION POINTS SHALL BE AS SHOWN HEREON.
5. PIPE DIMENSIONS ARE MEASURED FROM THE INSIDE FACE OF THE STRUCTURE.
6. UTILITIES SHOWN FOR COORDINATION PURPOSES. CONTRACTOR TO COORDINATE WITH UTILITY PROVIDER & CITY OF SPRINGFIELD TO CONFIRM EXISTING CAPACITY, FINAL LOCATION AND SIZING, AND MEET STANDARDS FOR PROPOSED UTILITY SERVICE.
7. CONTRACTOR TO TRENCH PATCH PER CITY OF SPRINGFIELD UTILITY AND PAVEMENT REQUIREMENTS, TYP. CLEANLY SAWCUT ALL UTILITY TRENCHING AREAS. EXISTING SIDEWALK AND CURBS TO BE REMOVED AND REPLACED WITH NEW CURBING AND SIDEWALK THAT SMOOTHLY MEETS EXISTING LINE AND GRADES.
8. ALTHOUGH CERTAIN ITEMS HAVE BEEN NOTED ON THIS DRAWING FOR DEMOLITION, NO ATTEMPT HAS BEEN MADE TO DELINEATE EACH AND EVERY ITEM THAT REQUIRES DEMOLITION FOR THE COMPLETION OF THE PROJECT. THE CONTRACTOR WILL BE RESPONSIBLE FOR ALL NECESSARY DEMOLITION WORK TO COMPLETE THE PROJECT. ALLEN & MAJOR ASSOCIATES, INC. IS NOT RESPONSIBLE FOR SITE DEMOLITION ITEMS NOT SHOWN ON THE SURVEY, OR SPECIFICALLY NOTED. THE DEMOLITION NOTES AND ARROWS ON THIS PLAN ARE TYPICAL AND DO NOT REFLECT QUANTITY.
9. THE INFORMATION SHOWN ON THIS PLAN IS THE SOLE PROPERTY OF ALLEN & MAJOR ASSOCIATES, INC. IT'S INTENDED USE IS TO PROVIDE INFORMATION. ANY ALTERATION, MISUSE, OR RECALCULATION OF INFORMATION OR DATA WITHOUT THE EXPRESSED, WRITTEN CONSENT OF ALLEN & MAJOR ASSOCIATES, INC. IS STRICTLY PROHIBITED.
10. CONTRACTOR TO COORDINATE ALL WORK WITHIN ADJACENT STREETS WITH SPRINGFIELD WATER AND SEWER COMMISSION (SWSC) AND THE SPRINGFIELD DEPARTMENT OF PUBLIC WORKS (DPW).
11. PROPOSED HYDRANTS SHALL BE APPROVED BY THE SPRINGFIELD WATER AND SEWER COMMISSION AND THE SPRINGFIELD FIRE DEPARTMENT.
12. PIPE TO BE CLASS 350 DUCTILE IRON WITH PUSH-ON JOINTS AND FIELD LOCATED GASKETS.
13. SHUT DOWN OF THE EXISTING 24-INCH WATER MAIN IN UNION STREET AND EXISTING 36-INCH WATER MAIN IN EAST COLUMBUS STREET SHALL BE COORDINATED WITH THE SWSC. SWSC MAY REQUIRE ADDITIONAL RESTRICTIONS ON WHEN/IF THE 36-INCH WATER MAIN MAY BE SHUT DOWN.
14. THERE SHALL BE A 4-FOOT OFFSET FROM THE OUTSIDE OF A WATER OR SANITARY/SEWER MAIN AND ANY OTHER UNDERGROUND UTILITY.
15. ALL NEW PUBLIC SANITARY MANHOLES SHALL BE 5-FEET DIAMETER WITH 32-INCH FRAME & COVER AND SHALL BE ACCORDING TO SWSC STANDARD DETAILS INCLUDING BRICK INVERTS, UNLESS OTHERWISE NOTED. CONCRETE INVERTS ARE NOT ALLOWED.
16. SANITARY SEWER PIPES LABELED SANITARY SERVICE ARE OWNED, OPERATED, AND MAINTAINED BY THE PROPERTY OWNER.
17. APPROVAL OF CURE WATER DISCHARGE TO THE EXISTING COMBINED SEWER SYSTEM WILL BE ALLOWED PROVIDED SUCH DISCHARGE SHALL BE CONDUCTED AT A RATE NOT TO EXCEED 200 GALLONS/MINUTE. CURE-WATER SHALL NOT BE DISCHARGED TO THE SWSC COMBINED SEWER SYSTEM IF TOTAL TOXIC ORGANICS (TTO) LEVELS EXCEED THE SWSC INDUSTRIAL DISCHARGE PERMIT LIMIT OF 2.13 PPM PER EPA TEST METHOD 1624C OR IF TOTAL VOLATILE ORGANIC COMPOUNDS (VOCS) EXCEED THE SWSC INDUSTRIAL DISCHARGE PERMIT LIMIT OF 0.5 MG/L. THE OWNER RESERVES THE RIGHT TO REQUIRE THAT THE CONTRACTOR SUBMIT CERTIFIED LAB RESULTS INDICATING THAT THESE LIMITS ARE NOT EXCEEDED PRIOR TO APPROVAL OF THE DISCHARGE OF CURE-WATER TO THE COMBINED SEWER SYSTEM, AT NO ADDITIONAL COST TO THE OWNER.
18. CONTRACTOR SHALL NOTIFY ENGINEER AND SPRINGFIELD DPW OF ANY UTILITY CONFLICTS WITH PROPOSED HYDRANT LOCATIONS.
19. HYDRANTS SHALL INSTALLED TO MEET AMERICANS WITH DISABILITIES ACT (ADA) ACCESS REQUIREMENTS. CONTRACTOR SHALL NOTIFY ENGINEER AND SPRINGFIELD DPW OF ANY CONFLICTS.
20. FIRE HYDRANTS SHALL MEET SPRINGFIELD FIRE DEPARTMENT REQUIREMENTS.
21. STATE STREET SEWER SERVICES CONNECTED TO THE SEWER MAIN, PROPOSED FOR REPLACEMENT, SHALL BE REPLACED TO THE BACK OF SIDEWALK OR BACK FOR BUILDING, AS APPROPRIATE, IF THE BUILDING IS ON THE BACK OF WALK.
22. ALL BARE STEEL TO CORROSION PROTECTION IN ACCORDANCE WITH SWSC GUIDELINES & POLICIES & MATERIAL SPECIFICATIONS.
23. ALL EXISTING WATER SERVICE & FIRE SERVICE SHALL BE NEW TO STREET LINE.
24. SPECIAL CONSIDERATION FOR SUPPORT OF EXCAVATION, AT LOCATIONS SHOWN ON THE CONTRACT DOCUMENTS, SHALL BE REQUIRED WHEN PASSING BELOW, OR DIRECTLY ADJACENT TO, EXISTING UTILITIES WHERE SUCH UTILITIES WILL POTENTIALLY BE ADVERSELY IMPACTED DURING EXCAVATION. SPECIAL SUPPORT OF EXCAVATION SHALL INCLUDE BUT IS NOT LIMITED TO STEEL SHEETING LEFT IN PLACE, SOLDIER PILES AND LAGGING LEFT IN PLACE, AND/OR AN EQUIVALENT SUPPORT OF EXCAVATION METHOD PRESENTED TO AND APPROVED BY THE ENGINEER.
25. REFER TO PROPOSED WATER PLAN SHEETS C-3C AND C-3D FOR ADDITIONAL WATER LAYOUT, MATERIALS AND REQUIREMENTS.
26. AS SHOWN ON PLANS, EXISTING UNION STREET SEWER MANHOLES SHALL BE REHABBED ACCORDING TO SWSC REQUIREMENTS INCLUDING, BUT NOT LIMITED TO, CEMENTITIOUS LINING, AND EPOXY LINING AS NEEDED, BASED UPON THE MACP INSPECTIONS.

PROPOSED SEWER MANHOLES

STRUCTURE	RIM	INVERT IN	INVERT IN	INVERT OUT	LENGTH	SLOPE	DIA.	MATERIAL
SMH#1	65.50	55.34(GARAGE)		55.24	135	2.00%	12"	PVC
SMH#2	64.10	54.79(BLDG)	53.29(SMH#3)	53.19	219	1.00%	12"	PVC
SMH#3	65.10	56.08(BLDG V.I.F.)	54.58(SMH#4)	54.48	119	1.00%	12"	PVC
SMH#4	64.50	56.40(BLDG)	54.88(SMH#5)	54.79	20	1.00%	8"	PVC
SMH#5	64.25	57.85(BLDG)		57.75	287	1.00%	8"	PVC
SMH#7	62.61	50.74(EXIST. SMH)		50.64	262	EXIST.	10"	VCP*
SMH#8	63.61	50.33(GARAGE)	50.33(SMH#7)	50.23	276	EXIST.	10"	VCP*
SMH#9	61.60	61.60(CO#4)		41.42	40	V.I.F.**	12"	PVC

NOTE:
1. VCP* – EXISTING 10" VCP SEWER MAIN TO BE REHABBED WITH CURED-IN-PLACE SYSTEM.
2. V.I.F. ** = INVERT AT EXISTING BULKHEAD. TO BE FIELD DETERMINED.

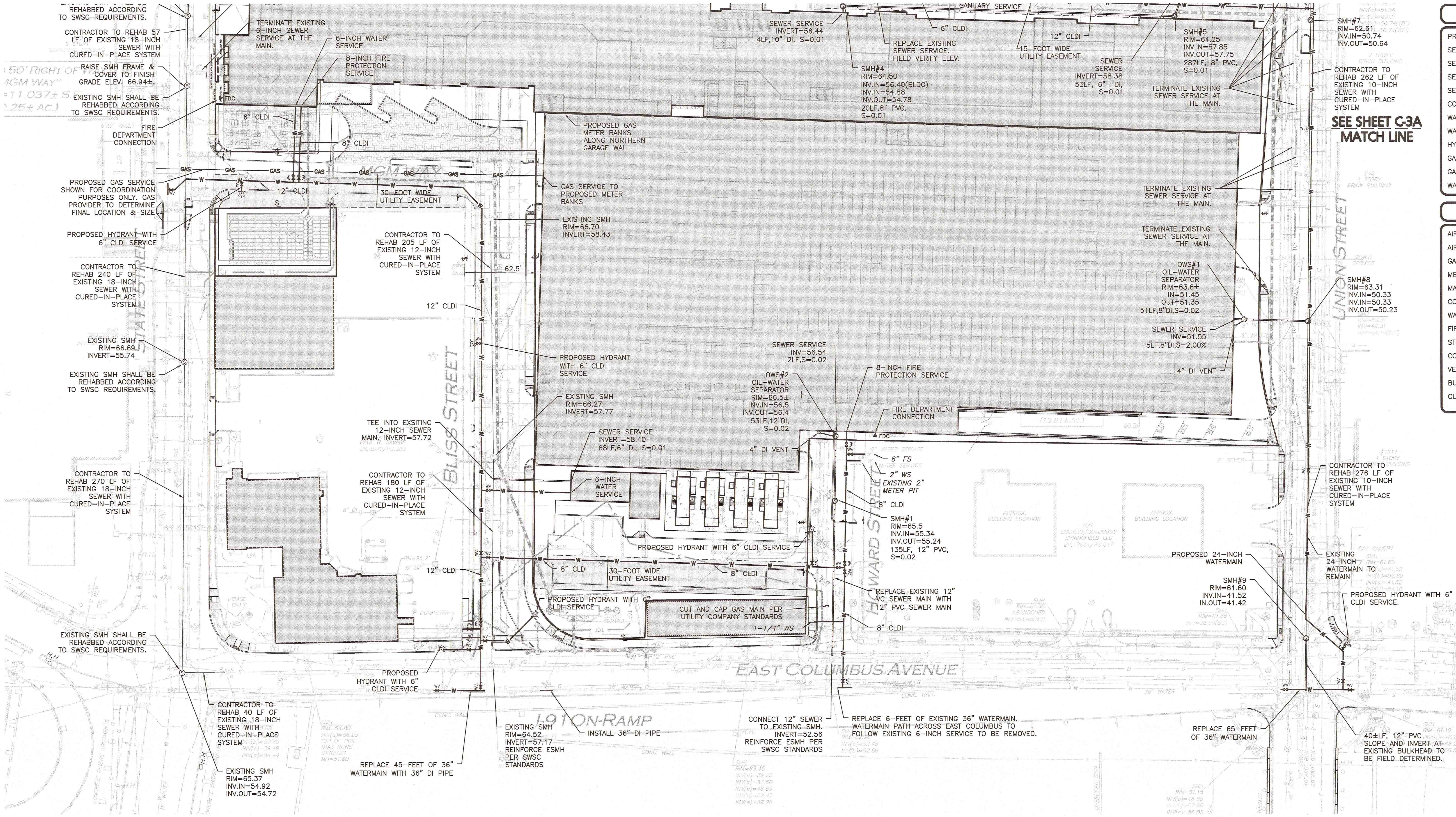

LEGEND:

PROPERTY LINE	
SEWER MANHOLE	
SEWER CLEANOUT	
SEWER VENT	
SEWER LINE	
CONCRETE PIPE ENCASEMENT	
WATER LINE	W
WATER VALVE	WV
HYDRANT	
GAS VALVE	GV
GAS LINE	GAS
WATER LINE REDUCER	

ABBREVIATIONS:

AIR VALVE ASSEMBLY	AVA
AIR CORP	AC
GATE VALVE	GV
MECHANICAL JOINT	MJ
MANHOLE	MH
COPPER TYPE	CT
WATER SERVICE	WS
FIRE SERVICE	FS
STREET LINE	$\underline{\$}$
COPPER TO COPPER	C TO C
VERIFY IN FIELD	V.I.F.
BUILDING	BLDG
CLEAN OUT	CO

DIG SAFE
BEFORE YOU DIG CALL 811 OR 1-888-DIG-SAFE 1-888-344-7233

GRAPHIC SCALE
40 0 20 40 80 160
(IN FEET)
1 inch = 40 ft.

N:\PROJECTS\1839-02\CIVIL\DRAWINGS\CURRENT\C-1839-02 – UTILITY.DWG

ENGINEER:

ALLEN & MAJOR ASSOCIATES, INC.
civil & structural engineering • land surveying
environmental consulting • landscape architecture
www.allenmajor.com
100 COMMERCE WAY
P.O. BOX 2118
WOBURN MA 01888-0118
TEL: (781) 935-6889
FAX: (781) 935-2896
WOBURN, MA • LAKEVILLE, MA • MANCHESTER, NH

SEAL:
COMMONWEALTH OF MASSACHUSETTS
TIMOTHY J. WILLIAMS CIVIL No.43119 REGISTERED PROFESSIONAL ENGINEER
10/23/15

CONSULTANT:

OWNER:
MGM RESORTS INTERNATIONAL
3260 Industrial Road, Las Vegas,NV 89109
702.692.9622 Phone 702.862.1750 Fax

MGM SPRINGFIELD
SPRINGFIELD, MA

PROJECT: MGM SPRINGFIELD - SITE/CIVIL RECORD

REVISIONS:

NO.	DATE	ISSUE
1	10/23/15	SITE PLAN APPROVAL

THIS DRAWING HAS BEEN PREPARED IN ELECTRONIC FORMAT. CLIENT/CLIENT'S REPRESENTATIVE OR CONSULTANT MAY BE PROVIDED COPIES OF DRAWINGS AND SPECIFICATIONS ON MAGNETIC MEDIA FOR HIS/HER INFORMATION AND USE FOR SPECIFIC APPLICATION TO THIS PROJECT. DUE TO THE POTENTIAL THAT THE MAGNETIC INFORMATION MAY BE MODIFIED UNINTENTIONALLY OR OTHERWISE, ALLEN & MAJOR ASSOCIATES, INC. MAY REMOVE ALL INDICATION OF THE DOCUMENT'S AUTHORSHIP ON THE MAGNETIC MEDIA. PRINTED REPRESENTATIONS OF THE DRAWINGS AND SPECIFICATIONS ISSUED SHALL BE THE ONLY RECORD COPIES OF ALLEN & MAJOR ASSOCIATES, INC.'S WORK PRODUCT.
Copyright 2015 Allen & Major Associates, Inc. All Rights Reserved

DRAWING TITLE:
PROPOSED UTILITY PLAN

All dimensions, levels, layouts and field conditions shall be verified at the site by the contractor before proceeding with the work.

MRID Project No.		58012MASS
Consultant Project No.		1839-02D
Date:		08/14/2015
Drawn By	Checked By	Approved By
KEA	TJW	TJW
File Name: C1839-02D		

C-3B

NOTES:

1. THE CONTRACTOR IS SPECIFICALLY CAUTIONED THAT THE LOCATION AND/OR ELEVATION OF EXISTING UTILITIES AND STRUCTURES AS SHOWN ON THESE PLANS IS BASED ON RECORDS OF VARIOUS UTILITY COMPANIES AND WHERE POSSIBLE, MEASUREMENTS TAKEN IN THE FIELD. THIS INFORMATION IS NOT TO BE RELIED ON AS BEING EXACT OR COMPLETE. THE LOCATION OF ALL UNDERGROUND UTILITIES AND STRUCTURES SHALL BE VERIFIED IN THE FIELD BY THE CONTRACTOR PRIOR TO THE START OF CONSTRUCTION. THE CONTRACTOR MUST CONTACT THE APPROPRIATE UTILITY COMPANY, ANY GOVERNING PERMITTING AUTHORITY, AND "DIGSAFE" AT LEAST 72 HOURS PRIOR TO ANY EXCAVATION WORK TO REQUEST EXACT FIELD LOCATION OF UTILITIES AND THE ENGINEER SHALL BE NOTIFIED IN WRITING OF ANY UTILITIES INTERFERING WITH THE PROPOSED CONSTRUCTION AND APPROPRIATE REMEDIAL ACTION TAKEN BEFORE PROCEEDING WITH THE WORK. IT SHALL BE THE RESPONSIBILITY OF THE CONTRACTOR TO RELOCATE ALL EXISTING UTILITIES WHICH CONFLICT WITH THE PROPOSED IMPROVEMENTS SHOWN ON THE PLANS.
2. ALL ELEVATIONS REFER TO NAVD '88.
3. THE SANITARY SEWER FLOW WITHIN THE MUNICIPAL TRUNKLINE SHALL NOT BE INTERRUPTED DURING ANY PART OF THE PROPOSED SITE WORK.
4. CONTRACTOR TO TRENCH PATCH PER CITY OF SPRINGFIELD UTILITY AND PAVEMENT REQUIREMENTS, TYP. CLEANLY SAWCUT ALL UTILITY TRENCHING AREAS. EXISTING SIDEWALK AND CURBS TO BE REMOVED AND REPLACED WITH NEW CURBING AND SIDEWALK THAT SMOOTHLY MEETS EXISTING LINE AND GRADES.
5. THE INFORMATION SHOWN ON THIS PLAN IS THE SOLE PROPERTY OF ALLEN & MAJOR ASSOCIATES, INC. IT'S INTENDED USE IS TO PROVIDE INFORMATION. ANY ALTERATION, MISUSE, OR RECALCULATION OF INFORMATION OR DATA WITHOUT THE EXPRESSED, WRITTEN CONSENT OF ALLEN & MAJOR ASSOCIATES, INC. IS STRICTLY PROHIBITED.
6. CONTRACTOR TO COORDINATE ALL WORK WITHIN ADJACENT STREETS WITH SPRINGFIELD WATER AND SEWER COMMISSION (SWSC) AND THE SPRINGFIELD DEPARTMENT OF PUBLIC WORKS (DPW).
7. PROPOSED HYDRANTS SHALL BE APPROVED BY THE SPRINGFIELD WATER AND SEWER COMMISSION AND THE SPRINGFIELD FIRE DEPARTMENT.
8. PIPE TO BE CLASS 350 DUCTILE IRON WITH PUSH-ON JOINTS AND FIELD LOC GASKETS.
9. SHUT DOWN OF THE EXISTING 24-INCH WATER MAIN IN UNION STREET AND EXISTING 36-INCH WATER MAIN IN EAST COLUMBUS STREET SHALL BE COORDINATED WITH THE SWSC. SWSC MAY REQUIRE ADDITIONAL RESTRICTIONS ON WHEN/IF THE 36-INCH WATER MAIN MAY BE SHUT DOWN.
10. THERE SHALL BE A 4-FOOT OFFSET FROM THE OUTSIDE OF A WATER OR SANITARY/SEWER MAIN AND ANY OTHER UNDERGROUND UTILITY.
11. APPROVAL OF CURE WATER DISCHARGE TO THE EXISTING COMBINED SEWER SYSTEM WILL BE ALLOWED PROVIDED SUCH DISCHARGE SHALL BE CONDUCTED AT A RATE NOT TO EXCEED 200 GALLONS/MINUTE. CURE-WATER SHALL NOT BE DISCHARGED TO THE SWSC COMBINED SEWER SYSTEM IF TOTAL TOXIC ORGANICS (TTO) LEVELS EXCEED THE SWSC INDUSTRIAL DISCHARGE PERMIT LIMIT OF 2.13 PPM PER EPA TEST METHOD 1624C OR IF TOTAL VOLATILE ORGANIC COMPOUNDS (VOCS) EXCEED THE SWSC INDUSTRIAL DISCHARGE PERMIT LIMIT OF 0.5 MG/L. THE OWNER RESERVES THE RIGHT TO REQUIRE THAT THE CONTRACTOR SUBMIT CERTIFIED LAB RESULTS INDICATING THAT THESE LIMITS ARE NOT EXCEEDED PRIOR TO APPROVAL OF THE DISCHARGE OF CURE-WATER TO THE COMBINED SEWER SYSTEM, AT NO ADDITIONAL COST TO THE OWNER.
12. CONTRACTOR SHALL NOTIFY ENGINEER AND SPRINGFIELD DPW OF ANY UTILITY CONFLICTS WITH PROPOSED HYDRANT LOCATIONS.
13. HYDRANTS SHALL INSTALLED TO MEET AMERICANS WITH DISABILITIES ACT (ADA) ACCESS REQUIREMENTS. CONTRACTOR SHALL NOTIFY ENGINEER AND SPRINGFIELD DPW OF ANY CONFLICTS.
14. ALL BARE STEEL TO CORROSION PROTECTION IN ACCORDANCE WITH SWSC GUIDELINES & POLICIES & MATERIAL SPECIFICATIONS.
15. ALL EXISTING WATER SERVICE & FIRE SERVICE SHALL BE NEW TO STREET LINE.
16. SPECIAL CONSIDERATION FOR SUPPORT OF EXCAVATION, AT LOCATIONS SHOWN ON THE CONTRACT DOCUMENTS, SHALL BE REQUIRED WHEN PASSING BELOW, OR DIRECTLY ADJACENT TO, EXISTING UTILITIES WHERE SUCH UTILITIES WILL POTENTIALLY BE ADVERSELY IMPACTED DURING EXCAVATION. SPECIAL SUPPORT OF EXCAVATION SHALL INCLUDE BUT IS NOT LIMITED TO STEEL SHEETING LEFT IN PLACE, SOLDIER PILES AND LAGGING LEFT IN PLACE, AND/OR AN EQUIVALENT SUPPORT OF EXCAVATION METHOD PRESENTED TO AND APPROVED BY THE ENGINEER.

TYPICAL NEW HYDRANT ASSEMBLIES SHALL INCLUDE:
PIPE ___" ø x 6" MJ x ANCHOR TEE
6" ANCHOR x MJ GV
6" DI PIPE, AS NEEDED
6" MJ FITTINGS, AS NEEDED
SWSC SPEC HYDRANT

*NOTE: ALL HYDRANTS SHALL BE 2 FEET BEHIND CURB IN SIDEWALK OR TREE BELT.

STRUCTURE	RIM	INVERT IN	INVERT IN
SMH#1	65.50	55.34(GARAGE)	
SMH#2	64.10	54.79(BLDG)	53.29(SMH#3)
SMH#3	65.10	56.08(BLDG V.I.F.)	54.58(SMH#4)
SMH#4	64.50	56.40(BLDG)	54.88(SMH#5)
SMH#5	64.25	57.85(BLDG)	
SMH#7	62.61	50.74(EXIST. SMH)	
SMH#8	63.61	50.33(GARAGE)	50.33(SMH#7)
SMH#9	61.60	61.60(CO#4)	

NOTE:
1. VCP* – EXISTING 10" VCP SEWER MAIN TO BE REHAB
2. V.I.F. ** = INVERT AT EXISTING BULKHEAD. TO BE FIE

LEGEND:

PROPERTY LINE	
SEWER MANHOLE	
SEWER CLEANOUT	
SEWER VENT	
SEWER LINE	
CONCRETE PIPE ENCASEMENT	
WATER LINE	W
WATER VALVE	WV
HYDRANT	
GAS VALVE	GV
GAS LINE	GAS
WATER LINE REDUCER	

ABBREVIATIONS:

AIR VALVE ASSEMBLY	AVA
AIR CORP	AC
GATE VALVE	GV
MECHANICAL JOINT	MJ
MANHOLE	MH
COPPER TYPE	CT
WATER SERVICE	WS
FIRE SERVICE	FS
STREET LINE	$
COPPER TO COPPER	C TO C

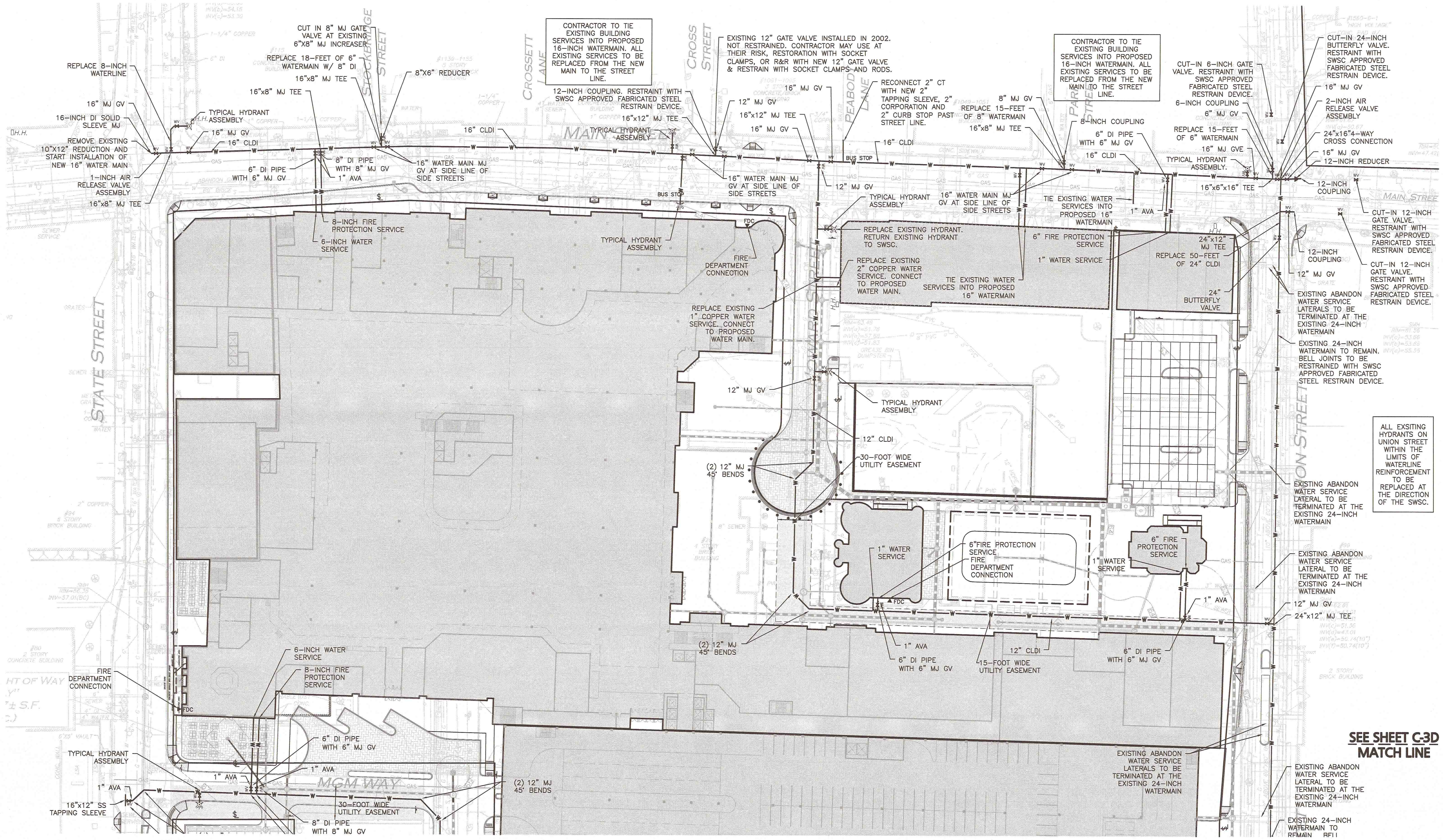

DIG SAFE
BEFORE YOU DIG CALL 811 OR 1-888-DIG-SAFE 1-888-344-7233

GRAPHIC SCALE
40 0 20 40 80 160
(IN FEET)
1 inch = 40 ft.

N:\PROJECTS\1839-02\CIVIL\DRAWINGS\CURRENT\C-1839-02 – WATER.DWG

ENGINEER:

ALLEN & MAJOR ASSOCIATES, INC.
civil & structural engineering • land surveying
environmental consulting • landscape architecture
www.allenmajor.com
100 COMMERCE WAY
P.O. BOX 2118
WOBURN MA 01888-0118
TEL: (781) 935-6889
FAX: (781) 935-2896
WOBURN, MA • LAKEVILLE, MA • MANCHESTER, NH

SEAL:
COMMONWEALTH OF MASSACHUSETTS
TIMOTHY J. WILLIAMS
CIVIL
No.43119
REGISTERED PROFESSIONAL ENGINEER
10/23/15

CONSULTANT:

OWNER:
MGM RESORTS INTERNATIONAL
3260 Industrial Road, Las Vegas,NV 89109
702.692.9622 Phone 702.862.1750 Fax

MGM SPRINGFIELD
SPRINGFIELD, MA

PROJECT:
MGM SPRINGFIELD - SITE/CIVIL RECORD

REVISIONS:

NO.	DATE	ISSUE
1	08/12/15	REVISED FOR APPROVAL
2	09/24/15	REVISED FOR APPROVAL

THIS DRAWING HAS BEEN PREPARED IN ELECTRONIC FORMAT. CLIENT/CLIENT'S REPRESENTATIVE OR CONSULTANT MAY BE PROVIDED COPIES OF DRAWINGS AND SPECIFICATIONS ON MAGNETIC MEDIA FOR HIS/HER INFORMATION AND USE FOR SPECIFIC APPLICATION TO THIS PROJECT. DUE TO THE POTENTIAL THAT THE MAGNETIC INFORMATION MAY BE MODIFIED UNINTENTIONALLY OR OTHERWISE, ALLEN & MAJOR ASSOCIATES, INC. MAY REMOVE ALL INDICATION OF THE DOCUMENT'S AUTHORSHIP ON THE MAGNETIC MEDIA. PRINTED REPRESENTATIONS OF THE DRAWINGS AND SPECIFICATIONS ISSUED SHALL BE THE ONLY RECORD COPIES OF ALLEN & MAJOR ASSOCIATES, INC.'S WORK PRODUCT.

Copyright 2015 Allen & Major Associates, Inc.
All Rights Reserved

DRAWING TITLE:

PROPOSED WATER PLAN

All dimensions, levels, layouts and field conditions shall be verified at the site by the contractor before proceeding with the work.

MRID Project No.	58012MASS
Consultant Project No.	1839-02D
Date:	07/28/2015

Drawn By	Checked By	Approved By
KEA	TJW	TJW

File Name: C1839-02D

C-3C

NOTES:

1. THE CONTRACTOR IS SPECIFICALLY CAUTIONED THAT THE LOCATION AND/OR ELEVATION OF EXISTING UTILITIES AND STRUCTURES AS SHOWN ON THESE PLANS IS BASED ON RECORDS OF VARIOUS UTILITY COMPANIES AND WHERE POSSIBLE, MEASUREMENTS TAKEN IN THE FIELD. THIS INFORMATION IS NOT TO BE RELIED ON AS BEING EXACT OR COMPLETE. THE LOCATION OF ALL UNDERGROUND UTILITIES AND STRUCTURES SHALL BE VERIFIED IN THE FIELD BY THE CONTRACTOR PRIOR TO THE START OF CONSTRUCTION. THE CONTRACTOR MUST CONTACT THE APPROPRIATE UTILITY COMPANY, ANY GOVERNING PERMITTING AUTHORITY, AND "DIGSAFE" AT LEAST 72 HOURS PRIOR TO ANY EXCAVATION WORK TO REQUEST EXACT FIELD LOCATION OF UTILITIES AND THE ENGINEER SHALL BE NOTIFIED IN WRITING OF ANY UTILITIES INTERFERING WITH THE PROPOSED CONSTRUCTION AND APPROPRIATE REMEDIAL ACTION TAKEN BEFORE PROCEEDING WITH THE WORK. IT SHALL BE THE RESPONSIBILITY OF THE CONTRACTOR TO RELOCATE ALL EXISTING UTILITIES WHICH CONFLICT WITH THE PROPOSED IMPROVEMENTS SHOWN ON THE PLANS.
2. ALL ELEVATIONS REFER TO NAVD '88.
3. THE SANITARY SEWER FLOW WITHIN THE MUNICIPAL TRUNKLINE SHALL NOT BE INTERRUPTED DURING ANY PART OF THE PROPOSED SITE WORK.
4. CONTRACTOR TO TRENCH PATCH PER CITY OF SPRINGFIELD UTILITY AND PAVEMENT REQUIREMENTS, TYP. CLEANLY SAWCUT ALL UTILITY TRENCHING AREAS. EXISTING SIDEWALK AND CURBS TO BE REMOVED AND REPLACED WITH NEW CURBING AND SIDEWALK THAT SMOOTHLY MEETS EXISTING LINE AND GRADES.
5. THE INFORMATION SHOWN ON THIS PLAN IS THE SOLE PROPERTY OF ALLEN & MAJOR ASSOCIATES, INC. IT'S INTENDED USE IS TO PROVIDE INFORMATION. ANY ALTERATION, MISUSE, OR RECALCULATION OF INFORMATION OR DATA WITHOUT THE EXPRESSED, WRITTEN CONSENT OF ALLEN & MAJOR ASSOCIATES, INC. IS STRICTLY PROHIBITED.
6. CONTRACTOR TO COORDINATE ALL WORK WITHIN ADJACENT STREETS WITH SPRINGFIELD WATER AND SEWER COMMISSION (SWSC) AND THE SPRINGFIELD DEPARTMENT OF PUBLIC WORKS (DPW).
7. PROPOSED HYDRANTS SHALL BE APPROVED BY THE SPRINGFIELD WATER AND SEWER COMMISSION AND THE SPRINGFIELD FIRE DEPARTMENT.
8. PIPE TO BE CLASS 350 DUCTILE IRON WITH PUSH-ON JOINTS AND FIELD LOC GASKETS.
9. SHUT DOWN OF THE EXISTING 24-INCH WATER MAIN IN UNION STREET AND EXISTING 36-INCH WATER MAIN IN EAST COLUMBUS STREET SHALL BE COORDINATED WITH THE SWSC. SWSC MAY REQUIRE ADDITIONAL RESTRICTIONS ON WHEN/IF THE 36-INCH WATER MAIN MAY BE SHUT DOWN.
10. THERE SHALL BE A 4-FOOT OFFSET FROM THE OUTSIDE OF A WATER OR SANITARY/SEWER MAIN AND ANY OTHER UNDERGROUND UTILITY.
11. APPROVAL OF CURE WATER DISCHARGE TO THE EXISTING COMBINED SEWER SYSTEM WILL BE ALLOWED PROVIDED SUCH DISCHARGE SHALL BE CONDUCTED AT A RATE NOT TO EXCEED 200 GALLONS/MINUTE. CURE-WATER SHALL NOT BE DISCHARGED TO THE SWSC COMBINED SEWER SYSTEM IF TOTAL TOXIC ORGANICS (TTO) LEVELS EXCEED THE SWSC INDUSTRIAL DISCHARGE PERMIT LIMIT OF 2.13 PPM PER EPA TEST METHOD 1624C OR IF TOTAL VOLATILE ORGANIC COMPOUNDS (VOCS) EXCEED THE SWSC INDUSTRIAL DISCHARGE PERMIT LIMIT OF 0.5 MG/L. THE OWNER RESERVES THE RIGHT TO REQUIRE THAT THE CONTRACTOR SUBMIT CERTIFIED LAB RESULTS INDICATING THAT THESE LIMITS ARE NOT EXCEEDED PRIOR TO APPROVAL OF THE DISCHARGE OF CURE-WATER TO THE COMBINED SEWER SYSTEM, AT NO ADDITIONAL COST TO THE OWNER.
12. CONTRACTOR SHALL NOTIFY ENGINEER AND SPRINGFIELD DPW OF ANY UTILITY CONFLICTS WITH PROPOSED HYDRANT LOCATIONS.
13. HYDRANTS SHALL INSTALLED TO MEET AMERICANS WITH DISABILITIES ACT (ADA) ACCESS REQUIREMENTS. CONTRACTOR SHALL NOTIFY ENGINEER AND SPRINGFIELD DPW OF ANY CONFLICTS.
14. ALL BARE STEEL TO CORROSION PROTECTION IN ACCORDANCE WITH SWSC GUIDELINES & POLICIES & MATERIAL SPECIFICATIONS.
15. ALL EXISTING WATER SERVICE & FIRE SERVICE SHALL BE NEW TO STREET LINE.
16. SPECIAL CONSIDERATION FOR SUPPORT OF EXCAVATION, AT LOCATIONS SHOWN ON THE CONTRACT DOCUMENTS, SHALL BE REQUIRED WHEN PASSING BELOW, OR DIRECTLY ADJACENT TO, EXISTING UTILITIES WHERE SUCH UTILITIES WILL POTENTIALLY BE ADVERSELY IMPACTED DURING EXCAVATION. SPECIAL SUPPORT OF EXCAVATION SHALL INCLUDE BUT IS NOT LIMITED TO STEEL SHEETING LEFT IN PLACE, SOLDIER PILES AND LAGGING LEFT IN PLACE, AND/OR AN EQUIVALENT SUPPORT OF EXCAVATION METHOD PRESENTED TO AND APPROVED BY THE ENGINEER.

TYPICAL NEW HYDRANT ASSEMBLIES SHALL INCLUDE:
PIPE ___" ø x 6" MJ x ANCHOR TEE
6" ANCHOR x MJ GV
6" DI PIPE, AS NEEDED
6" MJ FITTINGS, AS NEEDED
SWSC SPEC HYDRANT

*NOTE: ALL HYDRANTS SHALL BE 2 FEET BEHIND CURB IN SIDEWALK OR TREE BELT.

STRUCTURE	RIM	INVERT IN	INVERT IN
SMH#1	65.50	55.34(GARAGE)	
SMH#2	64.10	54.79(BLDG)	53.29(SMH#3)
SMH#3	65.10	56.08(BLDG V.I.F.)	54.58(SMH#4)
SMH#4	64.50	56.40(BLDG)	54.88(SMH#5)
SMH#5	64.25	57.85(BLDG)	
SMH#7	62.61	50.74(EXIST. SMH)	
SMH#8	63.61	50.33(GARAGE)	50.33(SMH#7)
SMH#9	61.60	61.60(CO#4)	

NOTE:
1. VCP* – EXISTING 10" VCP SEWER MAIN TO BE REHA
2. V.I.F. ** = INVERT AT EXISTING BULKHEAD. TO BE F

LEGEND:

PROPERTY LINE	
SEWER MANHOLE	
SEWER CLEANOUT	
SEWER VENT	
SEWER LINE	
CONCRETE PIPE ENCASEMENT	
WATER LINE	W
WATER VALVE	WV
HYDRANT	
GAS VALVE	GV
GAS LINE	GAS
WATER LINE REDUCER	

ABBREVIATIONS:

AIR VALVE ASSEMBLY	AVA
AIR CORP	AC
GATE VALVE	GV
MECHANICAL JOINT	MJ
MANHOLE	MH
COPPER TYPE	CT
WATER SERVICE	WS
FIRE SERVICE	FS
STREET LINE	$
COPPER TO COPPER	C TO C

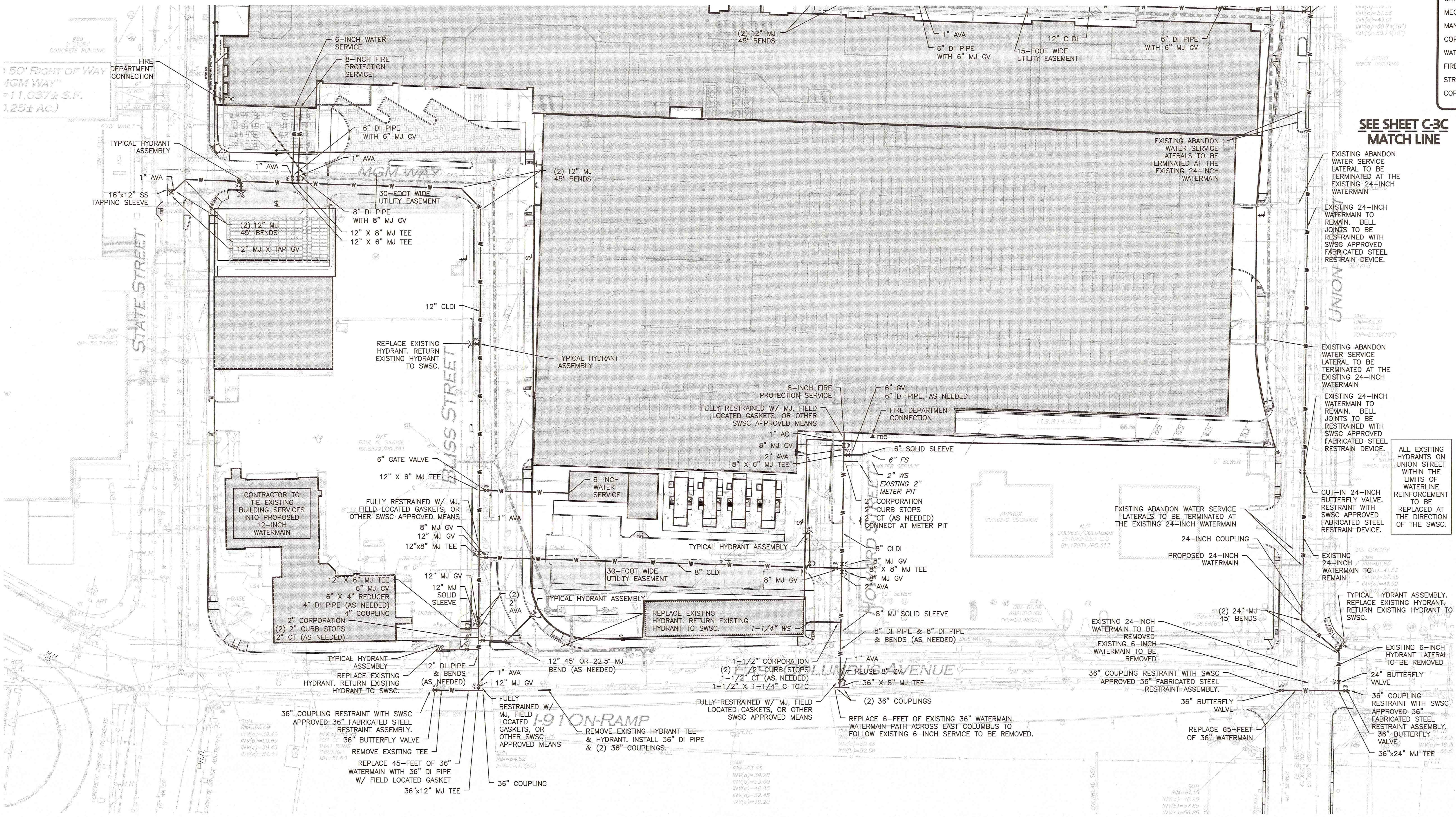

DIG SAFE
BEFORE YOU DIG CALL 811 OR 1-888-DIG-SAFE 1-888-344-7233

GRAPHIC SCALE
40 0 20 40 80 160
(IN FEET)
1 inch = 40 ft.

N:\PROJECTS\1839-02\CIVIL\DRAWINGS\CURRENT\C-1839-02 – WATER.DWG

ENGINEER:
ALLEN & MAJOR ASSOCIATES, INC.
civil & structural engineering • land surveying
environmental consulting • landscape architecture
www.allenmajor.com
100 COMMERCE WAY
P.O. BOX 2118
WOBURN MA 01888-0118
TEL: (781) 935-6889
FAX: (781) 935-2896
WOBURN, MA • LAKEVILLE, MA • MANCHESTER, NH

SEAL:
COMMONWEALTH OF MASSACHUSETTS
TIMOTHY J. WILLIAMS
CIVIL
No.43119
REGISTERED PROFESSIONAL ENGINEER
10/23/15

CONSULTANT:

OWNER:
MGM RESORTS INTERNATIONAL™
3260 Industrial Road, Las Vegas,NV 89109
702.692.9622 Phone 702.862.1750 Fax

MGM SPRINGFIELD
SPRINGFIELD, MA
PROJECT: MGM SPRINGFIELD - SITE/CIVIL RECORD

REVISIONS:

NO.	DATE	ISSUE
1	08/12/15	REVISED FOR APPROVAL
2	09/24/15	REVISED FOR APPROVAL

THIS DRAWING HAS BEEN PREPARED IN ELECTRONIC FORMAT. CLIENT/CLIENT'S REPRESENTATIVE OR CONSULTANT MAY BE PROVIDED COPIES OF DRAWINGS AND SPECIFICATIONS ON MAGNETIC MEDIA FOR HIS/HER INFORMATION AND USE FOR SPECIFIC APPLICATION TO THIS PROJECT. DUE TO THE POTENTIAL THAT THE MAGNETIC INFORMATION MAY BE MODIFIED UNINTENTIONALLY OR OTHERWISE, ALLEN & MAJOR ASSOCIATES, INC. MAY REMOVE ALL INDICATION OF THE DOCUMENT'S AUTHORSHIP ON THE MAGNETIC MEDIA. PRINTED REPRESENTATIONS OF THE DRAWINGS AND SPECIFICATIONS ISSUED SHALL BE THE ONLY RECORD COPIES OF ALLEN & MAJOR ASSOCIATES, INC.'S WORK PRODUCT.

Copyright 2015 Allen & Major Associates, Inc. All Rights Reserved

DRAWING TITLE:
PROPOSED WATER PLAN

All dimensions, levels, layouts and field conditions shall be verified at the site by the contractor before proceeding with the work.

MRID Project No.		58012MASS
Consultant Project No.		1839-02D
Date:		07/28/2015
Drawn By KEA	Checked By TJW	Approved By TJW
File Name: C1839-02D		

C-3D

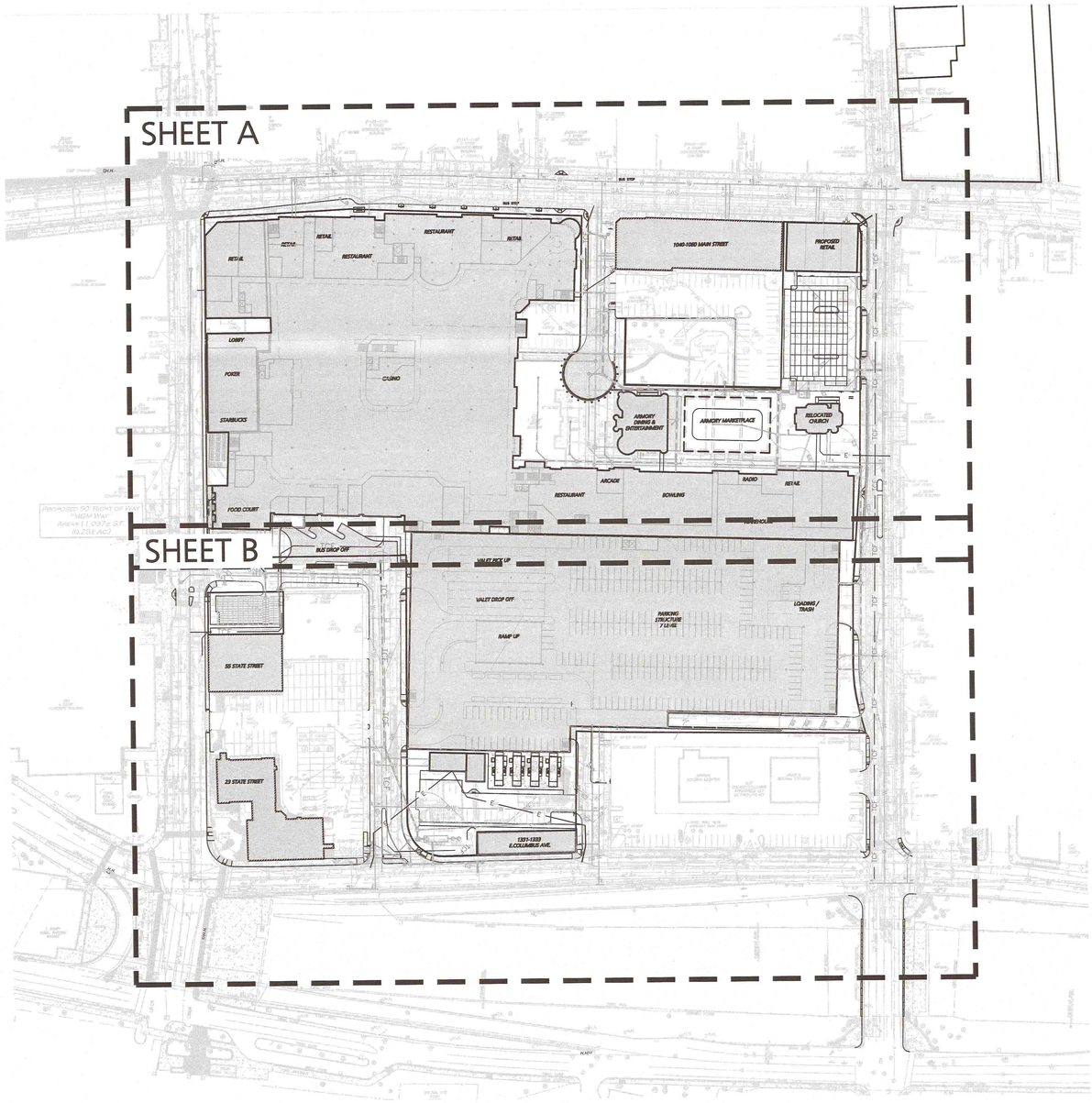

LEGEND:

- ELECTRIC MANHOLE (E)
- TELE/DATA MANHOLE (T)
- SWITCHING STATION (S)
- HAND HOLE (H)
- ELECTRICAL CONDUIT — E —
- TELE/CABLE/FIRE ALARM — TCF —

NOTES:

1. THE CONTRACTOR IS SPECIFICALLY CAUTIONED THAT THE LOCATION AND/OR ELEVATION OF EXISTING UTILITIES AND STRUCTURES AS SHOWN ON THESE PLANS IS BASED ON RECORDS OF VARIOUS UTILITY COMPANIES AND WHERE POSSIBLE, MEASUREMENTS TAKEN IN THE FIELD. THIS INFORMATION IS NOT TO BE RELIED ON AS BEING EXACT OR COMPLETE. THE LOCATION OF ALL UNDERGROUND UTILITIES AND STRUCTURES SHALL BE VERIFIED IN THE FIELD BY THE CONTRACTOR PRIOR TO THE START OF CONSTRUCTION. THE CONTRACTOR MUST CONTACT THE APPROPRIATE UTILITY COMPANY, ANY GOVERNING PERMITTING AUTHORITY, AND "DIGSAFE" AT LEAST 72 HOURS PRIOR TO ANY EXCAVATION WORK TO REQUEST EXACT FIELD LOCATION OF UTILITIES AND THE ENGINEER SHALL BE NOTIFIED IN WRITING OF ANY UTILITIES INTERFERING WITH THE PROPOSED CONSTRUCTION AND APPROPRIATE REMEDIAL ACTION TAKEN BEFORE PROCEEDING WITH THE WORK. IT SHALL BE THE RESPONSIBILITY OF THE CONTRACTOR TO RELOCATE ALL EXISTING UTILITIES WHICH CONFLICT WITH THE PROPOSED IMPROVEMENTS SHOWN ON THE PLANS.
2. ALL ELEVATIONS REFER TO NAVD '88.
3. BUILDING WATER/GAS/SEWER/ELECTRIC SERVICE SIZE AND LOCATIONS TO BE BASED ON FINAL BUILDING PLANS. CONNECTION POINTS SHALL BE AS SHOWN HEREON.
4. CONTRACTOR TO TRENCH PATCH PER CITY OF SPRINGFIELD UTILITY AND PAVEMENT REQUIREMENTS, TYP. CLEANLY SAWCUT ALL UTILITY TRENCHING AREAS. EXISTING SIDEWALK AND CURBS TO BE REMOVED AND REPLACED WITH NEW CURBING AND SIDEWALK THAT SMOOTHLY MEETS EXISTING LINE AND GRADES.
5. ALTHOUGH CERTAIN ITEMS HAVE BEEN NOTED ON THIS DRAWING FOR DEMOLITION, NO ATTEMPT HAS BEEN MADE TO DELINEATE EACH AND EVERY ITEM THAT REQUIRES DEMOLITION FOR THE COMPLETION OF THE PROJECT. THE CONTRACTOR WILL BE RESPONSIBLE FOR ALL NECESSARY DEMOLITION WORK TO COMPLETE THE PROJECT. ALLEN & MAJOR ASSOCIATES, INC. IS NOT RESPONSIBLE FOR SITE DEMOLITION ITEMS NOT SHOWN ON THE SURVEY, OR SPECIFICALLY NOTED. THE DEMOLITION NOTES AND ARROWS ON THIS PLAN ARE TYPICAL AND DO NOT REFLECT QUANTITY.
6. THE INFORMATION SHOWN ON THIS PLAN IS THE SOLE PROPERTY OF ALLEN & MAJOR ASSOCIATES, INC. IT'S INTENDED USE IS TO PROVIDE INFORMATION. ANY ALTERATION, MISUSE, OR RECALCULATION OF INFORMATION OR DATA WITHOUT THE EXPRESSED, WRITTEN CONSENT OF ALLEN & MAJOR ASSOCIATES, INC. IS STRICTLY PROHIBITED.
7. CONTRACTOR TO COORDINATE ALL WORK ADJACENT STREETS WITH THE SPRINGFIELD WATER AND SEWER COMMISSION (SWSC) AND THE SPRINGFIELD DEPARTMENT OF PUBLIC WORKS (DPW)

DIG SAFE

BEFORE YOU DIG CALL 811 OR 1-888-DIG-SAFE 1-888-344-7233

GRAPHIC SCALE

80 0 40 80 160 320

(IN FEET)
1 inch = 80 ft.

N:\PROJECTS\1839-02\CIVIL\DRAWINGS\CURRENT\C-1839-02 - ELECTRICAL.DWG

ENGINEER :

ALLEN & MAJOR ASSOCIATES, INC.
CIVIL & STRUCTURAL ENGINEERING • LAND SURVEYING
ENVIRONMENTAL • PLANNING • LANDSCAPE ARCHITECTURE
100 NORTH STREET
(P.O. BOX 5183)
TEL: (781) 935-6889
FAX: (781) 935-2896
WOBURN, MA • LAKEVILLE, MA • MANCHESTER, NH

SEAL:

COMMONWEALTH OF MASSACHUSETTS TIMOTHY J. WILLIAMS CIVIL No. 43119 REGISTERED PROFESSIONAL ENGINEER 10/23/15

CONSULTANT:

OWNER :

MGM RESORTS INTERNATIONAL
3260 Industrial Road, Las Vegas,NV 89109
702.692.9622 Phone 702.862.1750 Fax

MGM SPRINGFIELD
SPRINGFIELD, MA

PROJECT: MGM SPRINGFIELD - SITE/CIVIL RECORD

REVISIONS :

NO.	DATE	ISSUE
1	10/23/15	SITE PLAN APPROVAL

THIS DRAWING HAS BEEN PREPARED IN ELECTRONIC FORMAT. CLIENT/CLIENT'S REPRESENTATIVE OR CONSULTANT MAY BE PROVIDED COPIES OF DRAWINGS AND SPECIFICATIONS ON MAGNETIC MEDIA FOR HIS/HER INFORMATION AND USE FOR SPECIFIC APPLICATIONS. DUE TO THE POSSIBILITY OF ERRORS THAT THE MAGNETIC INFORMATION MAY BE MODIFIED UNINTENTIONALLY OR OTHERWISE, ALLEN & MAJOR ASSOCIATES, INC. MAY REMOVE ALL INDICATION OF THE DOCUMENT'S AUTHORSHIP ON THE MAGNETIC MEDIA. PRINTED REPRESENTATIONS OF THE DRAWINGS AND SPECIFICATIONS SHALL BE KEPT ON FILE AS THE PRIMARY COPIES OF ALLEN & MAJOR ASSOCIATES, INC.'S WORK PRODUCT.

Copyright 2015 Allen & Major Associates, Inc.
All Rights Reserved

DRAWING TITLE :

PROPOSED OVERALL ELECTRICAL PLAN

All dimensions, levels, layouts and field conditions shall be verified at the site by the contractor before proceeding with the work.

MRID Project No.	58012MASS
Consultant Project No.	1839-02D
Date:	08/14/2015

Drawn By	Checked By	Approved By
KEA	TJW	TJW

File Name: C1839-02D

C-4

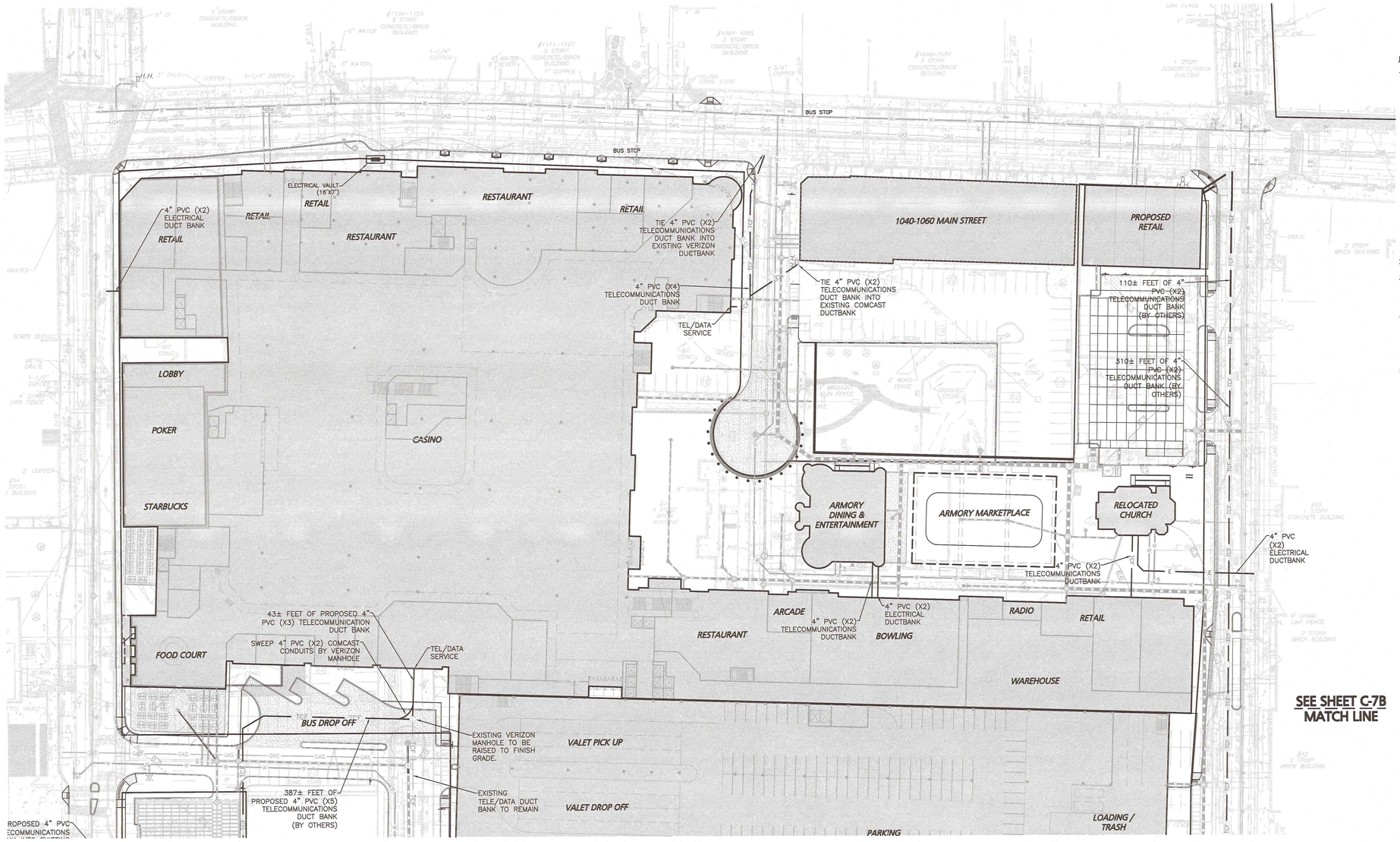

SEE SHEET C-7B
MATCH LINE

LEGEND:

ELECTRIC MANHOLE	E
TELE/DATA MANHOLE	T
SWITCHING STATION	SS
HAND HOLE	HH
ELECTRICAL CONDUIT	E
TELE/CABLE/FIRE ALARM	TCF

NOTES:

1. THE CONTRACTOR IS SPECIFICALLY CAUTIONED THAT THE LOCATION AND/OR ELEVATION OF EXISTING UTILITIES AND STRUCTURES AS SHOWN ON THESE PLANS IS BASED ON RECORDS OF VARIOUS UTILITY COMPANIES AND WHERE POSSIBLE, MEASUREMENTS TAKEN IN THE FIELD. THIS INFORMATION IS NOT TO BE RELIED ON AS BEING EXACT OR COMPLETE. THE LOCATION OF ALL UNDERGROUND UTILITIES AND STRUCTURES SHALL BE VERIFIED IN THE FIELD BY THE CONTRACTOR PRIOR TO THE START OF CONSTRUCTION. THE CONTRACTOR MUST CONTACT THE APPROPRIATE UTILITY COMPANY, ANY GOVERNING PERMITTING AUTHORITY, AND "DIGSAFE" AT LEAST 72 HOURS PRIOR TO ANY EXCAVATION WORK TO REQUEST EXACT FIELD LOCATION OF UTILITIES AND THE ENGINEER SHALL BE NOTIFIED IN WRITING OF ANY UTILITIES INTERFERING WITH THE PROPOSED CONSTRUCTION AND APPROPRIATE REMEDIAL ACTION TAKEN BEFORE PROCEEDING WITH THE WORK. IT SHALL BE THE RESPONSIBILITY OF THE CONTRACTOR TO RELOCATE ALL EXISTING UTILITIES WHICH CONFLICT WITH THE PROPOSED IMPROVEMENTS SHOWN ON THE PLANS.
2. ALL ELEVATIONS REFER TO NAVD '88.
3. BUILDING WATER/GAS/SEWER/ELECTRIC SERVICE SIZE AND LOCATIONS TO BE BASED ON FINAL BUILDING PLANS. CONNECTION POINTS SHALL BE AS SHOWN HEREON.
4. CONTRACTOR TO TRENCH PATCH PER CITY OF SPRINGFIELD UTILITY AND PAVEMENT REQUIREMENTS, TYP. CLEANLY SAWCUT ALL UTILITY TRENCHING AREAS. EXISTING SIDEWALK AND CURBS TO BE REMOVED AND REPLACED WITH NEW CURBING AND SIDEWALK THAT SMOOTHLY MEETS EXISTING LINE AND GRADES.
5. ALTHOUGH CERTAIN ITEMS HAVE BEEN NOTED ON THIS DRAWING FOR DEMOLITION, NO ATTEMPT HAS BEEN MADE TO DELINEATE EACH AND EVERY ITEM THAT REQUIRES DEMOLITION FOR THE COMPLETION OF THE PROJECT. THE CONTRACTOR WILL BE RESPONSIBLE FOR ALL NECESSARY DEMOLITION WORK TO COMPLETE THE PROJECT. ALLEN & MAJOR ASSOCIATES, INC. IS NOT RESPONSIBLE FOR SITE DEMOLITION ITEMS NOT SHOWN ON THE SURVEY, OR SPECIFICALLY NOTED. THE DEMOLITION NOTES AND ARROWS ON THIS PLAN ARE TYPICAL AND DO NOT REFLECT QUANTITY.
6. THE INFORMATION SHOWN ON THIS PLAN IS THE SOLE PROPERTY OF ALLEN & MAJOR ASSOCIATES, INC. IT'S INTENDED USE IS TO PROVIDE INFORMATION. ANY ALTERATION, MISUSE, OR RECALCULATION OF INFORMATION OR DATA WITHOUT THE EXPRESSED, WRITTEN CONSENT OF ALLEN & MAJOR ASSOCIATES, INC. IS STRICTLY PROHIBITED.
7. CONTRACTOR TO COORDINATE ALL WORK ADJACENT STREETS WITH THE SPRINGFIELD WATER AND SEWER COMMISSION (SWSC) AND THE SPRINGFIELD DEPARTMENT OF PUBLIC WORKS (DPW)

DIG SAFE

BEFORE YOU DIG CALL 811 OR 1-888-DIG-SAFE 1-888-344-7233

GRAPHIC SCALE

40 0 20 40 80 160

(IN FEET)
1 inch = 40 ft.

N:\PROJECTS\1839-02\CIVIL\DRAWINGS\CURRENT\C-1839-02 - ELECTRICAL.DWG

ENGINEER:

ALLEN & MAJOR ASSOCIATES, INC.
civil engineering • land surveying
environmental consulting • landscape architecture
100 COMMERCE WAY
WOBURN, MA 01801
FAX (781) 935-2896 • 781-935-1335
WOBURN, MA • PORTSMOUTH, NH • MANCHESTER, NH

SEAL:

COMMONWEALTH OF MASSACHUSETTS
TIMOTHY J. WILLIAMS
CIVIL
No. 43119
REGISTERED PROFESSIONAL ENGINEER

CONSULTANT:

OWNER:

MGM RESORTS INTERNATIONAL
3280 Industrial Road, Las Vegas,NV 89109
702.692.9622 Phone 702.862.1750 Fax

MGM SPRINGFIELD
SPRINGFIELD, MA

PROJECT: MGM SPRINGFIELD - SITE/CIVIL RECORD

REVISIONS:

NO.	DATE	ISSUE
1	10/23/15	SITE PLAN APPROVAL

THIS DRAWING HAS BEEN PREPARED IN ELECTRONIC FORMAT. CLIENT/CLIENT'S REPRESENTATIVE OR CONSULTANT MAY BE PROVIDED COPIES OF DRAWINGS AND SPECIFICATIONS ON MAGNETIC MEDIA FOR HIS/HER INFORMATION AND USE FOR SPECIFIC APPLICATION TO THIS PROJECT. DUE TO THE POTENTIAL THAT THE MAGNETIC MEDIA INFORMATION MAY BE MODIFIED FROM THE CONTRACT DRAWINGS, ALLEN & MAJOR ASSOCIATES, INC. MAY REMOVE ALL INDICATION OF THE DOCUMENTS AUTHORSHIP ON THE MAGNETIC MEDIA. PRINTED REPRESENTATIONS OF THE DRAWINGS AND SPECIFICATIONS ISSUED SHALL BE THE ONLY RECORD COPIES OF ALLEN & MAJOR ASSOCIATES, INC.'S WORK PRODUCT.

Copyright - 2015 Allen & Major Associates, Inc.
All Rights Reserved

DRAWING TITLE:

PROPOSED ELECTRICAL PLAN

All dimensions, levels, layouts and field conditions shall be verified at the site by the contractor before proceeding with the work.

MRID Project No.	58012MASS
Consultant Project No.	1839-02D
Date:	08/14/2015

Drawn By	Checked By	Approved By
KEA	TJW	TJW

File Name: C1839-02D

C-4A

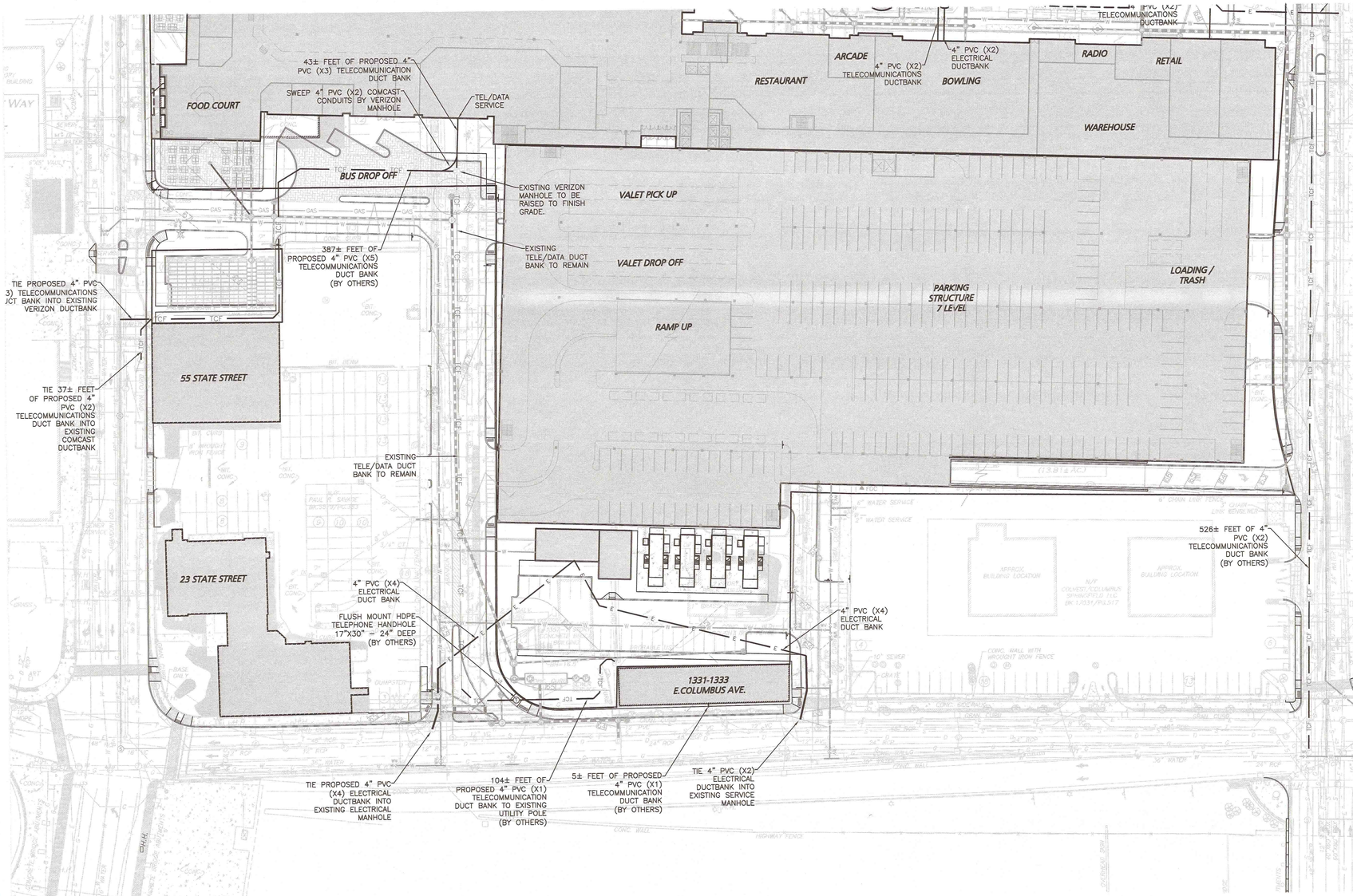

LEGEND:

ELECTRIC MANHOLE	E
TELE/DATA MANHOLE	T
SWITCHING STATION	SS
HAND HOLE	HH
ELECTRICAL CONDUIT	E
TELE/CABLE/FIRE ALARM	TCF

SEE SHEET C-7A
MATCH LINE

NOTES:

1. THE CONTRACTOR IS SPECIFICALLY CAUTIONED THAT THE LOCATION AND/OR ELEVATION OF EXISTING UTILITIES AND STRUCTURES AS SHOWN ON THESE PLANS IS BASED ON RECORDS OF VARIOUS UTILITY COMPANIES AND WHERE POSSIBLE, MEASUREMENTS TAKEN IN THE FIELD. THIS INFORMATION IS NOT TO BE RELIED ON AS BEING EXACT OR COMPLETE. THE LOCATION OF ALL UNDERGROUND UTILITIES AND STRUCTURES SHALL BE VERIFIED IN THE FIELD BY THE CONTRACTOR PRIOR TO THE START OF CONSTRUCTION. THE CONTRACTOR MUST CONTACT THE APPROPRIATE UTILITY COMPANY, ANY GOVERNING PERMITTING AUTHORITY, AND "DIGSAFE" AT LEAST 72 HOURS PRIOR TO ANY EXCAVATION WORK TO REQUEST EXACT FIELD LOCATION OF UTILITIES AND THE ENGINEER SHALL BE NOTIFIED IN WRITING OF ANY UTILITIES INTERFERING WITH THE PROPOSED CONSTRUCTION AND APPROPRIATE REMEDIAL ACTION TAKEN BEFORE PROCEEDING WITH THE WORK. IT SHALL BE THE RESPONSIBILITY OF THE CONTRACTOR TO RELOCATE ALL EXISTING UTILITIES WHICH CONFLICT WITH THE PROPOSED IMPROVEMENTS SHOWN ON THE PLANS.
2. ALL ELEVATIONS REFER TO NAVD '88.
3. BUILDING WATER/GAS/SEWER/ELECTRIC SERVICE SIZE AND LOCATIONS TO BE BASED ON FINAL BUILDING PLANS. CONNECTION POINTS SHALL BE AS SHOWN HEREON.
4. CONTRACTOR TO TRENCH PATCH PER CITY OF SPRINGFIELD UTILITY AND PAVEMENT REQUIREMENTS, TYP. CLEANLY SAWCUT ALL UTILITY TRENCHING AREAS. EXISTING SIDEWALK AND CURBS TO BE REMOVED AND REPLACED WITH NEW CURBING AND SIDEWALK THAT SMOOTHLY MEETS EXISTING LINE AND GRADES.
5. ALTHOUGH CERTAIN ITEMS HAVE BEEN NOTED ON THIS DRAWING FOR DEMOLITION, NO ATTEMPT HAS BEEN MADE TO DELINEATE EACH AND EVERY ITEM THAT REQUIRES DEMOLITION FOR THE COMPLETION OF THE PROJECT. THE CONTRACTOR WILL BE RESPONSIBLE FOR ALL NECESSARY DEMOLITION WORK TO COMPLETE THE PROJECT. ALLEN & MAJOR ASSOCIATES, INC. IS NOT RESPONSIBLE FOR SITE DEMOLITION ITEMS NOT SHOWN ON THE SURVEY, OR SPECIFICALLY NOTED. THE DEMOLITION NOTES AND ARROWS ON THIS PLAN ARE TYPICAL AND DO NOT REFLECT QUANTITY.
6. THE INFORMATION SHOWN ON THIS PLAN IS THE SOLE PROPERTY OF ALLEN & MAJOR ASSOCIATES, INC. IT'S INTENDED USE IS TO PROVIDE INFORMATION. ANY ALTERATION, MISUSE, OR RECALCULATION OF INFORMATION OR DATA WITHOUT THE EXPRESSED, WRITTEN CONSENT OF ALLEN & MAJOR ASSOCIATES, INC. IS STRICTLY PROHIBITED.
7. CONTRACTOR TO COORDINATE ALL WORK ADJACENT STREETS WITH THE SPRINGFIELD WATER AND SEWER COMMISSION (SWSC) AND THE SPRINGFIELD DEPARTMENT OF PUBLIC WORKS (DPW)

DIG SAFE

BEFORE YOU DIG
CALL 811 OR
1-888-DIG-SAFE
1-888-344-7233

GRAPHIC SCALE

40 0 20 40 80 160

(IN FEET)
1 inch = 40 ft.

N:\PROJECTS\1839-02\CIVIL\DRAWINGS\CURRENT\C-1839-02 – ELECTRICAL.DWG

ENGINEER :

ALLEN & MAJOR ASSOCIATES, INC.
CIVIL & STRUCTURAL ENGINEERS • LAND SURVEYING
ENVIRONMENTAL SCIENTISTS & PLANNERS
(P.O. BOX 3130)
WORCESTER, MA 01613
TEL: (781) 935-6889
www.allenmajor.com

WOBURN, MA • LAKEVILLE, MA • MANCHESTER, NH

SEAL:

TIMOTHY J. WILLIAMS CIVIL No.43119 REGISTERED PROFESSIONAL ENGINEER MASSACHUSETTS
10/23/15

CONSULTANT:

OWNER :

MGM RESORTS INTERNATIONAL
3260 Industrial Road, Las Vegas,NV 89109
702.692.9622 Phone 702.862.1750 Fax

MGM SPRINGFIELD
SPRINGFIELD, MA

PROJECT:
MGM SPRINGFIELD - SITE/CIVIL RECORD

REVISIONS :

NO.	DATE	ISSUE
1	10/23/15	SITE PLAN APPROVAL

THIS DRAWING HAS BEEN PREPARED IN ELECTRONIC FORMAT. OWNER/CLIENT'S REPRESENTATIVE OR CONSULTANT MAY BE PROVIDED COPIES OF DRAWINGS AND SPECIFICATIONS ON MAGNETIC MEDIA FOR THEIR CONVENIENCE IN REVIEWING THE WORK APPLICATION TO THIS PROJECT. DUE TO THE POTENTIAL THAT THE MAGNETIC INFORMATION MAY BE MODIFIED UNINTENTIONALLY OR OTHERWISE, ALLEN & MAJOR ASSOCIATES, INC. MAY REMOVE ALL INDICATION OF THE DOCUMENT'S AUTHORSHIP ON THE MAGNETIC MEDIA. FURTHERMORE, THE HARD COPY SIGNED AND SEALED MYLAR/PRINTS ISSUED SHALL BE THE ONLY RECORD COPIES OF ALLEN & MAJOR ASSOCIATES, INC'S WORK PRODUCT.

Copyright 2015 Allen & Major Associates, Inc. All Rights Reserved

DRAWING TITLE :

PROPOSED ELECTRICAL PLAN

All dimensions, levels, layouts and field conditions shall be verified at the site by the contractor before proceeding with the work.

MRID Project No.	59012MASS
Consultant Project No.	1839-02D
Date:	08/14/2015

Drawn By	Checked By	Approved By
KEA	TJW	TJW

File Name: C1839-02D

C-4B

NOTES:

1. THE INFORMATION SHOWN ON THIS PLAN IS THE SOLE PROPERTY OF ALLEN & MAJOR ASSOCIATES, INC. IT'S INTENDED USE IS TO PROVIDE INFORMATION. ANY ALTERATION, MISUSE, OR RECALCULATION OF INFORMATION OR DATA WITHOUT THE EXPRESSED, WRITTEN CONSENT OF ALLEN & MAJOR ASSOCIATES, INC. IS STRICTLY PROHIBITED.

DIG SAFE

BEFORE YOU DIG
CALL 811 OR
1-888-DIG-SAFE
1-888-344-7233

GRAPHIC SCALE

120 0 60 120 240 480

(IN FEET)
1 inch = 120 ft.

N:\PROJECTS\1839-02\CIVIL\DRAWINGS\CURRENT\C-1839-02 - LOCUS.DWG

ENGINEER :

ALLEN & MAJOR ASSOCIATES, INC.
civil & structural engineering • land surveying
environmental consulting • landscape architecture
www.allenmajor.com
100 COMMERCE WAY
P.O. BOX 2314
WORCESTER, MA 01606-0118
TEL: (781) 935-6000
FAX: (781) 935-5896
WORCESTER, MA • LAKEVILLE, MA • MINCHESTER, NH

SEAL:

COMMONWEALTH OF MASSACHUSETTS
TIMOTHY J. WILLIAMS
CIVIL
No.43119
REGISTERED PROFESSIONAL ENGINEER
10/23/15

CONSULTANT:

OWNER :

MGM RESORTS INTERNATIONAL
3260 Industrial Road, Las Vegas,NV 89109
702.692.9622 Phone 702.862.1750 Fax

MGM SPRINGFIELD
SPRINGFIELD, MA

PROJECT :
MGM SPRINGFIELD - SITE/CIVIL RECORD

REVISIONS :

NO.	DATE	ISSUE
1	10/23/15	SITE PLAN APPROVAL

THIS DRAWING HAS BEEN PREPARED IN ELECTRONIC FORMAT. CLIENT/CLIENT'S REPRESENTATIVE OR CONSULTANT MAY BE PROVIDED COPIES OF DRAWINGS AND SPECIFICATIONS ON MAGNETIC MEDIA FOR HIS/HER INFORMATION AND USE FOR SPECIFIC APPLICATION TO THIS PROJECT. DUE TO THE POTENTIAL THAT THE MAGNETIC INFORMATION MAY BE MODIFIED UNINTENTIONALLY OR OTHERWISE, ALLEN & MAJOR ASSOCIATES, INC. MAY REMOVE ALL INDICATION OF THE DOCUMENT'S AUTHORSHIP ON THE MAGNETIC MEDIA. PRINTED REPRESENTATIONS OF THE DRAWINGS AND SPECIFICATIONS ISSUED SHALL BE THE ONLY RECORD COPIES OF ALLEN & MAJOR ASSOCIATES, INC.'S WORK PRODUCT.

Copyright 2015 Allen & Major Associates, Inc.
All Rights Reserved

DRAWING TITLE :

LOCUS PLAN

All dimensions, levels, layouts and field conditions shall be verified at the site by the contractor before proceeding with the work.

MRID Project No.	58012MASS
Consultant Project No.	1839-02D
Date:	08/14/2015

Drawn By	Checked By	Approved By
KEA	TJW	TJW

File Name: C1839-02D

C-5

NOTES:
1. REFERENCE PLANS: EX-1, EX-2, C-2A, C-2B, C-3A, C-3B, C-3C, & C-3D.
2. IF A CONFLICT IS FOUND BETWEEN THE PLAN/PROFILE SHEETS AND THE REFERENCE SHEETS, INFORMATION SHOWN ON THE REFERENCE SHEETS SHALL GOVERN.
3. EXISTING STRUCTURES AND PIPES NOTED IN PROFILE VIEW AS TO BE ELIMINATED SHALL BE EITHER REMOVED IN ENTIRETY AND APPROPRIATELY BACKFILLED OR FILLED WITH FLOW FILL, AT THE CONTRACTOR'S DISCRETION.
4. CONTRACTOR TO VERIFY UTILITY SERVICES TO BE ABANDONED. ALL UTILITY SERVICE LATERALS TO BE ABANDONED SHALL BE COMPLETELY REMOVED FROM THE CITY RIGHT-OF-WAY.
5. REFERENCE SHEETS C-3C & C-3D FOR TYPICAL HYDRANT ASSEMBLY.

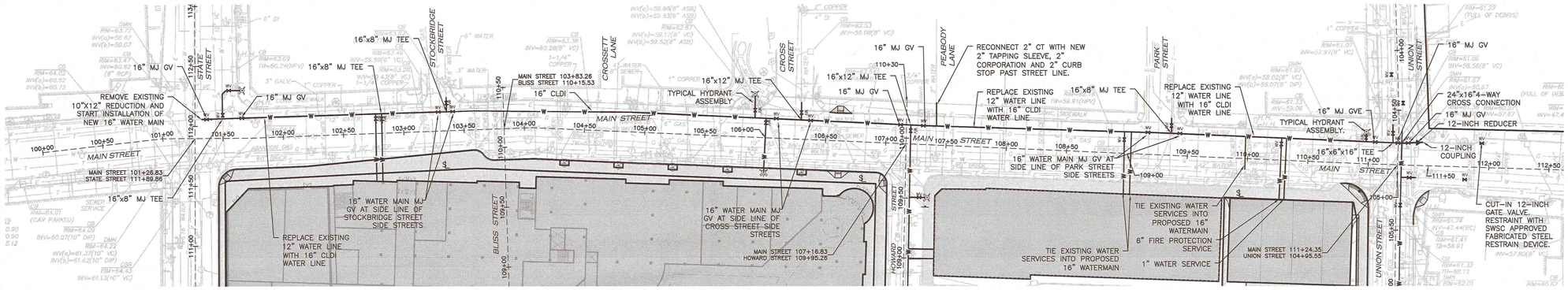

MAIN STREET CENTERLINE PROFILE

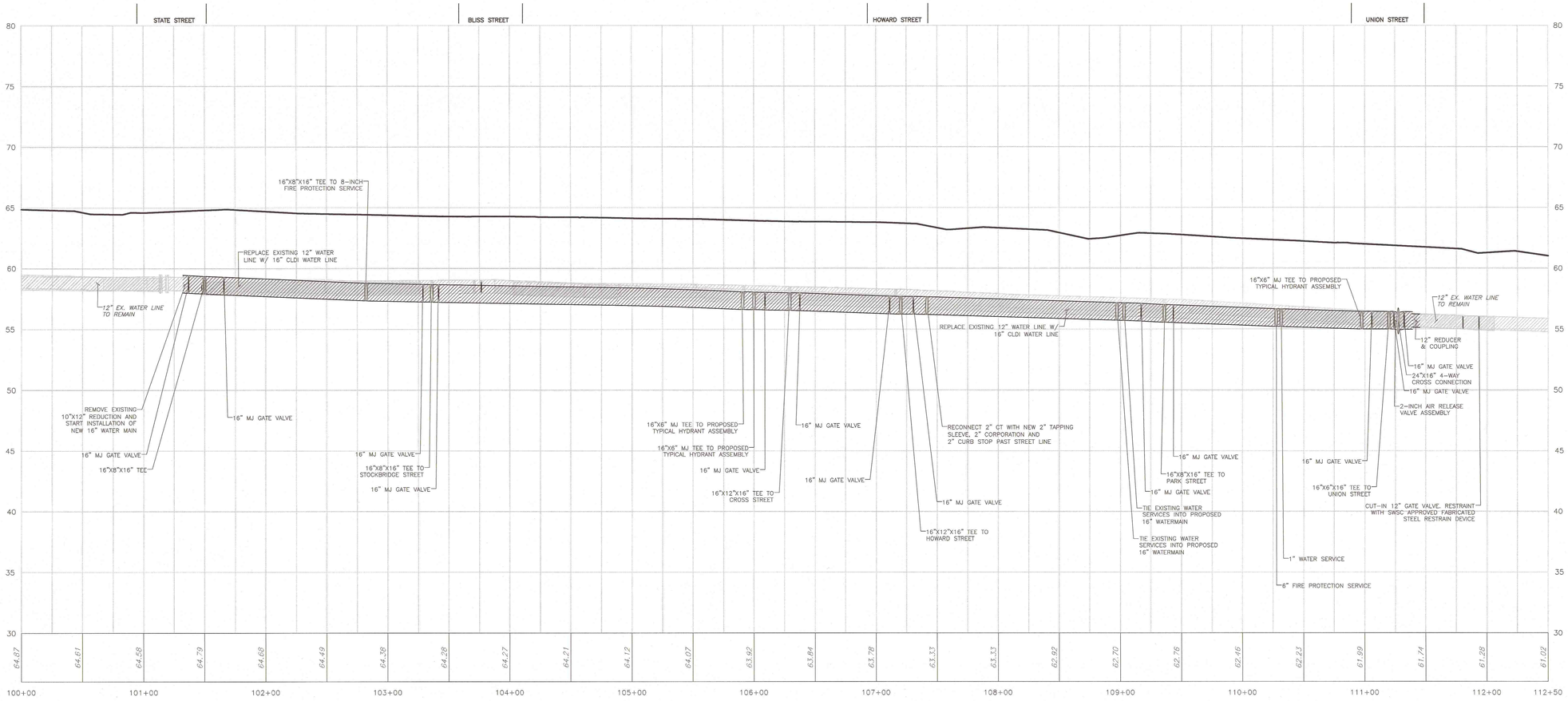

DIG SAFE
BEFORE YOU DIG CALL 811 OR 1-888-DIG-SAFE 1-888-344-7233

HORIZONTAL SCALE: 1" = 40'
VERTICAL SCALE: 1" = 4'

N:\PROJECTS\1839-02\CIVIL\DRAWINGS\CURRENT\C-1839-02 - PROFILES - WATER IMPROVEMENTS.DWG

ENGINEER:
ALLEN & MAJOR ASSOCIATES, INC.
civil • structural • traffic • transportation • surveying
environmental consulting • landscape architecture
100 COMMERCE WAY
WORTHINGTON, MA 01098-9103
TEL: (413) 203-2420
FAX: (781) 935-2896
WORCESTER, MA • TARRYTOWN, NY • MANCHESTER, NH

SEAL:
COMMONWEALTH OF MASSACHUSETTS TIMOTHY J. WILLIAMS CIVIL No.43119 REGISTERED PROFESSIONAL ENGINEER

CONSULTANT:

OWNER:
MGM RESORTS INTERNATIONAL
3260 Industrial Road, Las Vegas,NV 89109
702.892.9622 Phone 702.862.1750 Fax

MGM SPRINGFIELD
SPRINGFIELD, MA

PROJECT:
MGM SPRINGFIELD - SITE/CIVIL RECORD

REVISIONS:

NO.	DATE	ISSUE
1	10/23/15	SITE PLAN APPROVAL

THIS DRAWING HAS BEEN PREPARED IN ELECTRONIC FORMAT. THE CONTRACTOR AND SUBCONTRACTORS MAY RECEIVE AND USE PROVIDED COPIES OF DRAWINGS AND SPECIFICATIONS ON MAGNETIC MEDIA FOR HIS/HER INFORMATION AND USE FOR SPECIFIC APPLICATION TO THIS PROJECT. DUE TO THE POTENTIAL THAT THE MAGNETIC INFORMATION MAY BE MODIFIED UNINTENTIONALLY OR OTHERWISE, ALLEN & MAJOR ASSOCIATES, INC. RESERVES THE REMOVAL OF THE DOCUMENT'S AUTHORSHIP ON THE MAGNETIC MEDIA. PRINTED REPRESENTATIONS OF THE DRAWINGS AND SPECIFICATIONS ISSUED SHALL BE THE ONLY RECORD COPIES OF ALLEN & MAJOR ASSOCIATES, INC'S WORK PRODUCT.

Copyright 2015 Allen & Major Associates, Inc.
All Rights Reserved

DRAWING TITLE:
WATER MAIN IMPROVEMENTS PLAN & PROFILE MAIN STREET

All dimensions, levels, layouts and field conditions shall be verified at the site by the contractor before proceeding with the work.

MRID Project No.	58012MASS
Consultant Project No.	1839-02D
Date:	08/14/2015

Drawn By	Checked By	Approved By
KEA	TJW	TJW

File Name: C1839-02D

W-1

NOTES:
1. REFERENCE PLANS: EX-1, EX-2, C-2A, C-2B, C-3A, C-3B, C-3C, & C-3D.
2. IF A CONFLICT IS FOUND BETWEEN THE PLAN/PROFILE SHEETS AND THE REFERENCE SHEETS, INFORMATION SHOWN ON THE REFERENCE SHEETS SHALL GOVERN.
3. EXISTING STRUCTURES AND PIPES NOTED IN PROFILE VIEW AS TO BE ELIMINATED SHALL BE EITHER REMOVED IN ENTIRETY AND APPROPRIATELY BACKFILLED OR FILLED WITH FLOW FILL, AT THE CONTRACTOR'S DISCRETION.
4. CONTRACTOR TO VERIFY UTILITY SERVICES TO BE ABANDONED. ALL UTILITY SERVICE LATERALS TO BE ABANDONED SHALL BE COMPLETELY REMOVED FROM THE CITY RIGHT-OF-WAY.

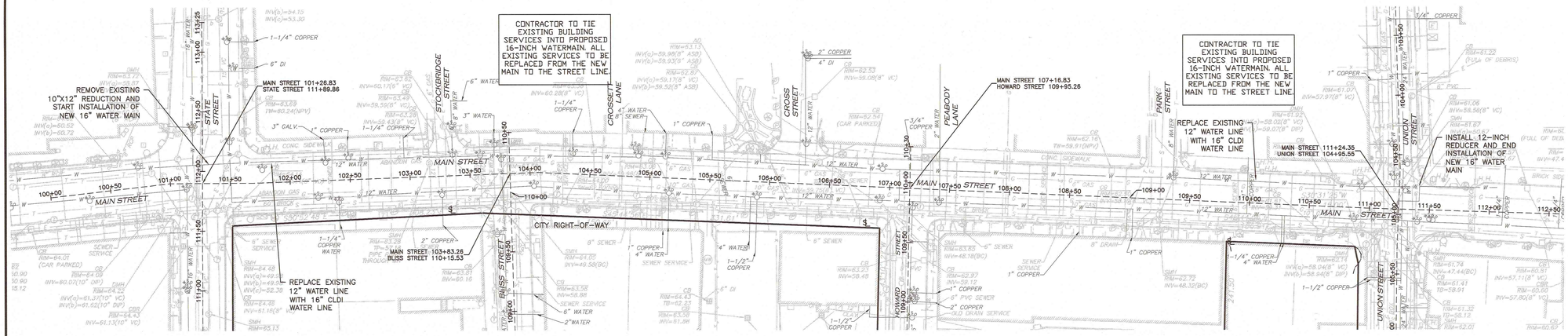

MAIN STREET CENTERLINE PROFILE

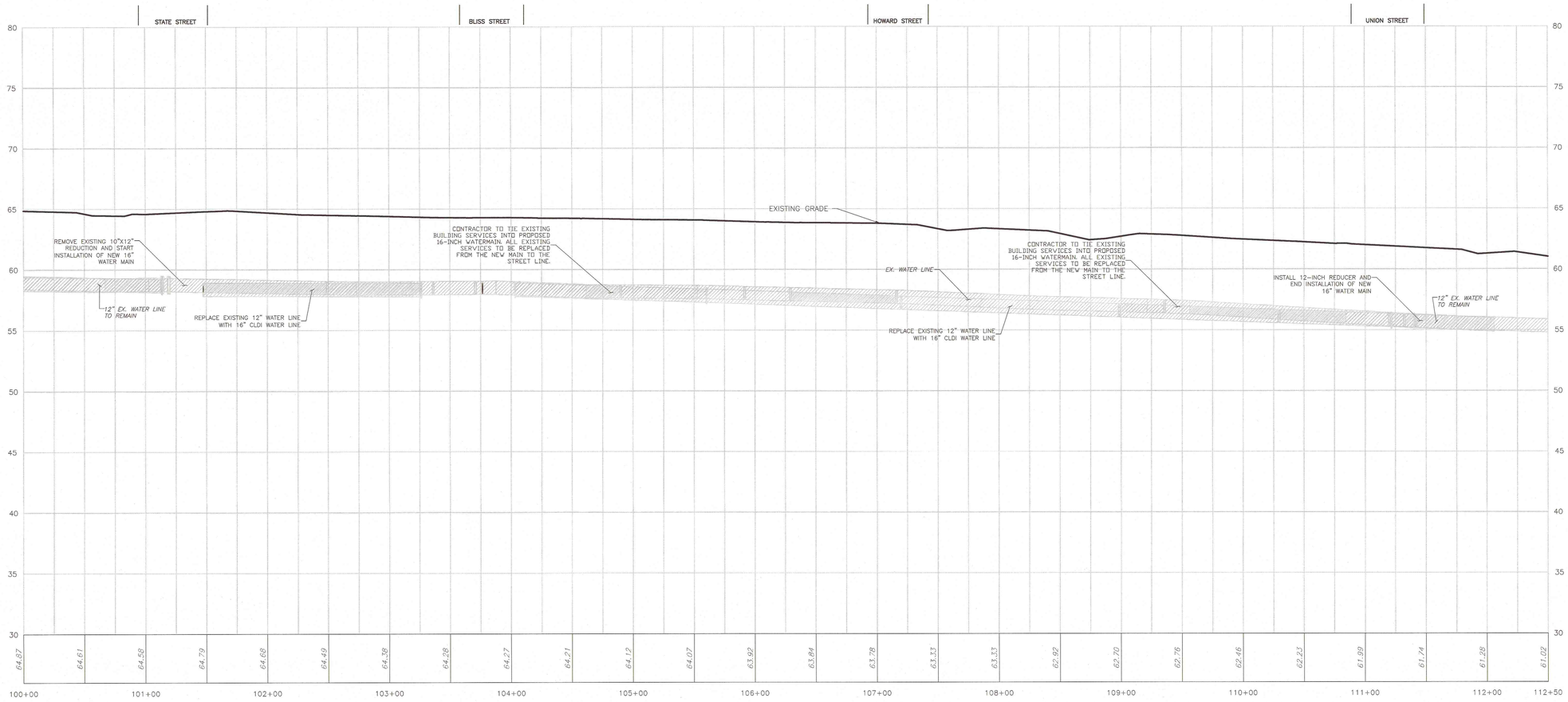

DIG SAFE

BEFORE YOU DIG CALL 811 OR 1-888-DIG-SAFE 1-888-344-7233

HORIZONTAL SCALE: 1" = 40'
VERTICAL SCALE: 1" = 4'

N:\PROJECTS\1839-02\CIVIL\DRAWINGS\CURRENT\C-1839-02 - PROFILES - WATER CONNECTIONS.DWG

ENGINEER :

ALLEN & MAJOR ASSOCIATES, INC.
civil engineering • surveying
environmental consulting • landscape architecture
100 CUMMINGS CENTER
BEVERLY, MA 01915
(978) 922-8555
FAX (978) 922-2914
WOBURN, MA • LAKEVILLE, MA • MANCHESTER, NH

SEAL:

COMMONWEALTH OF MASSACHUSETTS
TIMOTHY J. WILLIAMS
CIVIL
No. 43119
REGISTERED PROFESSIONAL ENGINEER

CONSULTANT:

OWNER :

MGM RESORTS INTERNATIONAL™
3260 Industrial Road, Las Vegas,NV 89109
702.692.9622 Phone 702.862.1750 Fax

MGM SPRINGFIELD
SPRINGFIELD, MA

PROJECT: MGM SPRINGFIELD - SITE/CIVIL RECORD

REVISIONS :

NO.	DATE	ISSUE
1	10/23/15	SITE PLAN APPROVAL

THIS DRAWING HAS BEEN PREPARED IN ELECTRONIC FORMAT. CLIENT/CLIENT'S REPRESENTATIVE OR CONSULTANT MAY BE PROVIDED COPIES OF DRAWINGS AND SPECIFICATIONS ON MAGNETIC MEDIA FOR HELPED INFORMATION AND USE FOR SPECIFIC APPLICATION TO THIS PROJECT. DUE TO THE POTENTIAL THAT THE MAGNETIC MEDIA MAY BE ALTERED OR MODIFIED FOR OTHER USES, OTHERWISE, ALLEN & MAJOR ASSOCIATES, INC. MAY REMOVE ALL INDICATION OF THE DOCUMENT'S AUTHORSHIP ON THE MAGNETIC MEDIA. PRINTED REPRESENTATIONS OF THE DRAWINGS AND SPECIFICATIONS ISSUED SHALL BE THE ONLY RECORD COPIES OF ALLEN & MAJOR ASSOCIATES, INC.'S WORK PRODUCT.

Copyright 2015 Allen & Major Associates, Inc.
All Rights Reserved

DRAWING TITLE :

WATER MAIN CONNECTIONS PLAN & PROFILE MAIN STREET

All dimensions, levels, layouts and field conditions shall be verified at the site by the contractor before proceeding with the work.

MRID Project No.	58012MASS
Consultant Project No.	1839-02D
Date:	08/14/2015

Drawn By	Checked By	Approved By
KEA	TJW	TJW

File Name: C1839-02D

W-2

OTES:

1. REFERENCE PLANS: EX-1, EX-2, C-2A, C-2B, C-3A, C-3B, C-3C, & C-3D.
2. IF A CONFLICT IS FOUND BETWEEN THE PLAN/PROFILE SHEETS AND THE REFERENCE SHEETS, INFORMATION SHOWN ON THE REFERENCE SHEETS SHALL GOVERN.
3. EXISTING STRUCTURES AND PIPES NOTED IN PROFILE VIEW AS TO BE ELIMINATED SHALL BE EITHER REMOVED IN ENTIRETY AND APPROPRIATELY BACKFILLED OR FILLED WITH FLOW FILL, AT THE CONTRACTOR'S DISCRETION.
4. CONTRACTOR TO VERIFY UTILITY SERVICES TO BE ABANDONED. ALL UTILITY SERVICE LATERALS TO BE ABANDONED SHALL BE COMPLETELY REMOVED FROM THE CITY RIGHT-OF-WAY.
5. REFERENCE SHEETS C-3C & C-3D FOR TYPICAL HYDRANT ASSEMBLY.

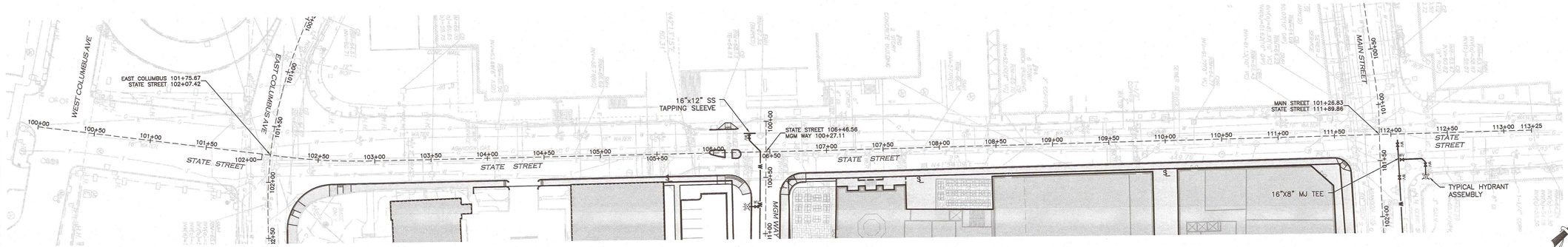

STATE STREET CENTERLINE PROFILE

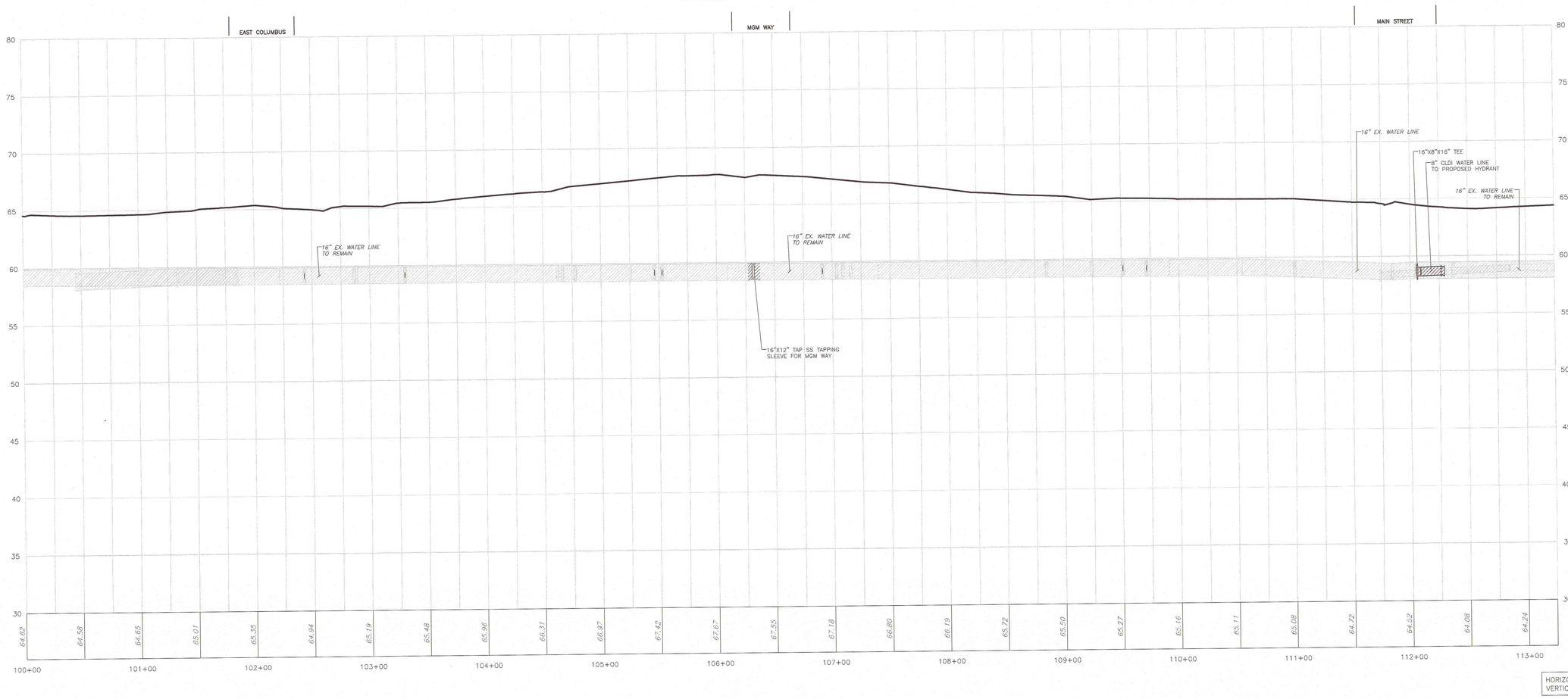

DIG SAFE

BEFORE YOU DIG CALL 811 OR 1-888-DIG-SAFE 1-888-344-7233

HORIZONTAL SCALE: 1" = 40'
VERTICAL SCALE: 1" = 4'

N:\PROJECTS\1839-02\CIVIL\DRAWINGS\CURRENT\C-1839-02 - PROFILES - WATER IMPROVEMENTS.DWG

ENGINEER:

ALLEN & MAJOR ASSOCIATES, INC.
civil & structural engineering • land surveying
environmental consulting • landscape architecture
www.allenmajor.com
100 COMMERCE WAY
P.O. BOX 218
WOBURN, MA 01888-0218
TEL: (781) 935-6889
FAX: (781) 935-6896
WOBURN, MA • LAKEVILLE, MA • MANCHESTER, NH

SEAL:

COMMONWEALTH OF MASSACHUSETTS
TIMOTHY J. WILLIAMS
CIVIL
No. 43119
REGISTERED PROFESSIONAL ENGINEER
10/23/15

CONSULTANT:

OWNER:

MGM RESORTS INTERNATIONAL
3260 Industrial Road, Las Vegas, NV 89109
702.692.9622 Phone 702.862.1750 Fax

MGM SPRINGFIELD
SPRINGFIELD, MA

PROJECT:
MGM SPRINGFIELD - SITE/CIVIL RECORD

REVISIONS:

NO.	DATE	ISSUE
1	10/23/15	SITE PLAN APPROVAL

THIS DRAWING HAS BEEN PREPARED IN ELECTRONIC FORMAT. CLIENT/CLIENT'S REPRESENTATIVE OR CONSULTANT MAY BE PROVIDED COPIES OF DRAWINGS AND SPECIFICATIONS ON MAGNETIC MEDIA FOR HIS/HER INFORMATION AND USE FOR SPECIFIC APPLICATION TO THIS PROJECT. DUE TO THE POTENTIAL THAT THE MAGNETIC INFORMATION MAY BE MODIFIED UNINTENTIONALLY OR OTHERWISE, ALLEN & MAJOR ASSOCIATES, INC. MAY REMOVE ALL INDICATION OF THE DOCUMENT'S AUTHORSHIP ON THE MAGNETIC MEDIA. PRINTED REPRESENTATIONS OF THE DRAWINGS AND SPECIFICATIONS ISSUED SHALL BE THE ONLY RECORD COPIES OF ALLEN & MAJOR ASSOCIATES, INC.'S WORK PRODUCT.

Copyright 2015 Allen & Major Associates, Inc.
All Rights Reserved

DRAWING TITLE:

WATER MAIN IMPROVEMENTS PLAN & PROFILE STATE STREET

All dimensions, levels, layouts and field conditions shall be verified at the site by the contractor before proceeding with the work.

MRID Project No.	58012MASS
Consultant Project No.	1839-02D
Date:	08/14/2015

Drawn By	Checked By	Approved By
KEA	TJW	TJW

File Name: C1839-02D

W-3

NOTES:
1. REFERENCE PLANS: EX-1, EX-2, C-2A, C-2B, C-3A, C-3B, C-3C, & C-3D.
2. IF A CONFLICT IS FOUND BETWEEN THE PLAN/PROFILE SHEETS AND THE REFERENCE SHEETS, INFORMATION SHOWN ON THE REFERENCE SHEETS SHALL GOVERN.
3. EXISTING STRUCTURES AND PIPES NOTED IN PROFILE VIEW AS TO BE ELIMINATED SHALL BE EITHER REMOVED IN ENTIRETY AND APPROPRIATELY BACKFILLED OR FILLED WITH FLOW FILL, AT THE CONTRACTOR'S DISCRETION.
4. CONTRACTOR TO VERIFY UTILITY SERVICES TO BE ABANDONED. ALL UTILITY SERVICE LATERALS TO BE ABANDONED SHALL BE COMPLETELY REMOVED FROM THE CITY RIGHT-OF-WAY.

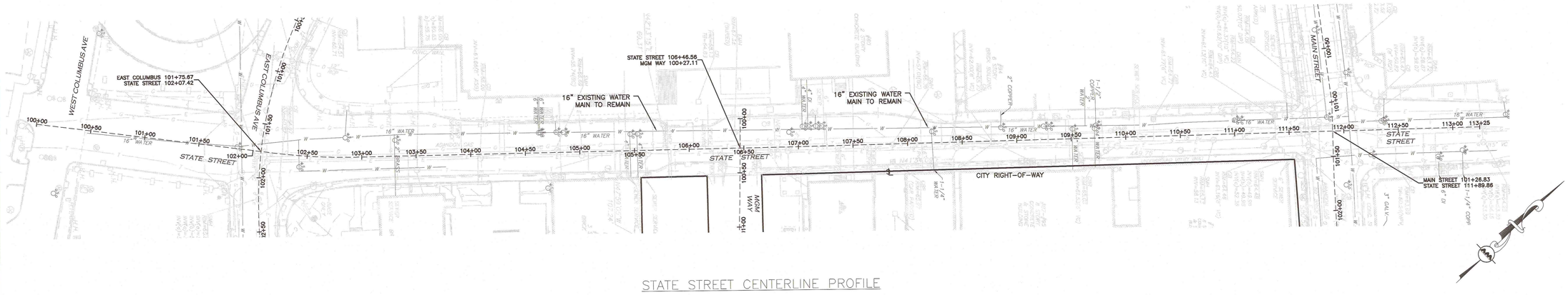

STATE STREET CENTERLINE PROFILE

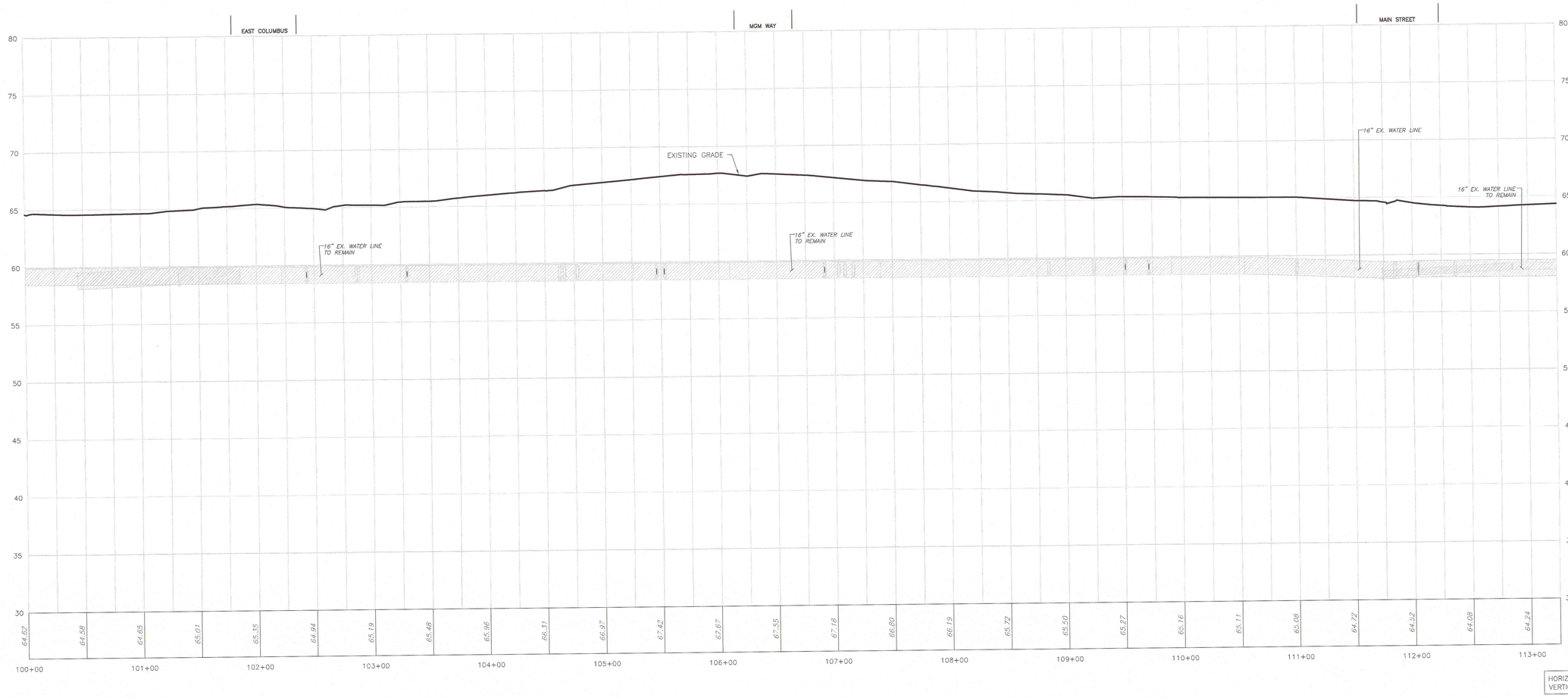

DIG SAFE
BEFORE YOU DIG CALL 811 OR 1-888-DIG-SAFE 1-888-344-7233

HORIZONTAL SCALE: 1" = 40'
VERTICAL SCALE: 1" = 4'

N:\PROJECTS\1839-02\CIVIL\DRAWINGS\CURRENT\C-1839-02 - PROFILES - WATER CONNECTIONS.DWG

ENGINEER:
ALLEN & MAJOR ASSOCIATES, INC.
civil & structural • transportation • land surveying
environmental • coastline • landscape architecture
100 COMMERCIAL WAY
WOBURN, MA 01801
TEL: (781) 935-6889
WWW.ALLENMAJOR.COM
WOBURN, MA • LAKEVILLE, MA • MANCHESTER, NH

SEAL:
COMMONWEALTH OF MASSACHUSETTS
TIMOTHY J. WILLIAMS
CIVIL
No. 43119
REGISTERED PROFESSIONAL ENGINEER

CONSULTANT:

OWNER:
MGM RESORTS INTERNATIONAL
3260 Industrial Road, Las Vegas,NV 89109
702.692.9622 Phone 702.862.1750 Fax

MGM SPRINGFIELD
SPRINGFIELD, MA
PROJECT: MGM SPRINGFIELD - SITE/CIVIL RECORD

REVISIONS:

NO.	DATE	ISSUE
1	10/23/15	SITE PLAN APPROVAL

THIS DRAWING HAS BEEN PREPARED IN ELECTRONIC FORMAT. CLIENT/CLIENT'S REPRESENTATIVE OR CONSULTANT MAY BE PROVIDED COPIES OF DRAWINGS IN ELECTRONIC OR MAGNETIC MEDIA FOR INFORMATION AND USE FOR SPECIFIC APPLICATION TO THIS PROJECT. DUE TO THE POTENTIAL THAT THE MAGNETIC INFORMATION MAY BE MODIFIED UNINTENTIONALLY OR OTHERWISE, ALLEN & MAJOR ASSOCIATES, INC. MAY REMOVE ALL REFERENCE TO ITS PROFESSIONAL SEAL FROM ELECTRONIC MEDIA. PRINTED REPRODUCTIONS OF THE DRAWINGS AND SPECIFICATIONS ISSUED SHALL BE THE ONLY RECORD COPIES OF ALLEN & MAJOR ASSOCIATES, INC.'S WORK PRODUCT.

Copyright 2015 Allen & Major Associates, Inc.
All Rights Reserved

DRAWING TITLE:
WATER MAIN CONNECTIONS PLAN & PROFILE STATE STREET

All dimensions, levels, layouts and field conditions shall be verified at the site by the contractor before proceeding with the work.

MRID Project No. 58012MASS
Consultant Project No. 1839-02D
Date: 08/14/2015

Drawn By	Checked By	Approved By
KEA	TJW	TJW

File Name: C1839-02D

W-4

OTES:

1. REFERENCE PLANS: EX-1, EX-2, C-2A, C-2B, C-3A, C-3B, C-3C, & C-3D.
2. IF A CONFLICT IS FOUND BETWEEN THE PLAN/PROFILE SHEETS AND THE REFERENCE SHEETS, INFORMATION SHOWN ON THE REFERENCE SHEETS SHALL GOVERN.
3. EXISTING STRUCTURES AND PIPES NOTED IN PROFILE VIEW AS TO BE ELIMINATED SHALL BE EITHER REMOVED IN ENTIRETY AND APPROPRIATELY BACKFILLED OR FILLED WITH FLOW FILL, AT THE CONTRACTOR'S DISCRETION.
4. CONTRACTOR TO VERIFY UTILITY SERVICES TO BE ABANDONED. ALL UTILITY SERVICE LATERALS TO BE ABANDONED SHALL BE COMPLETELY REMOVED FROM THE CITY RIGHT-OF-WAY.
5. REFERENCE SHEETS C-3C & C-3D FOR TYPICAL HYDRANT ASSEMBLY.

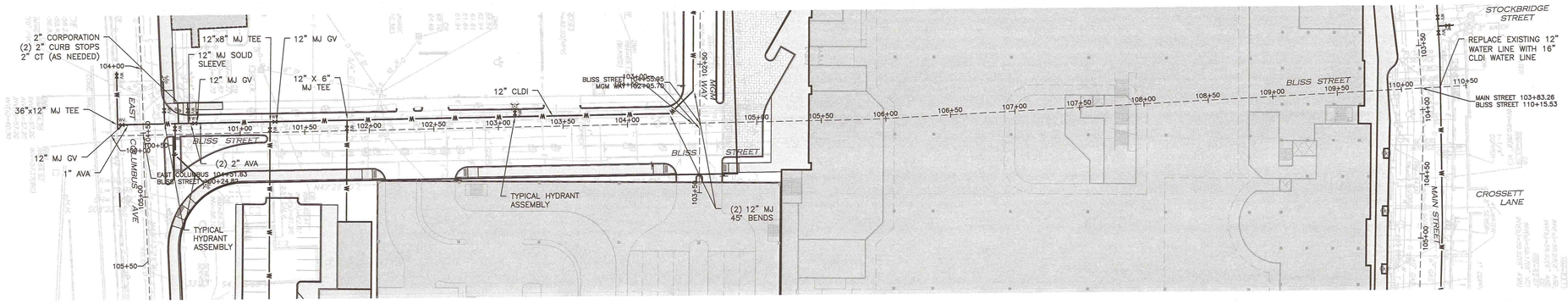

BLISS STREET CENTERLINE PROFILE

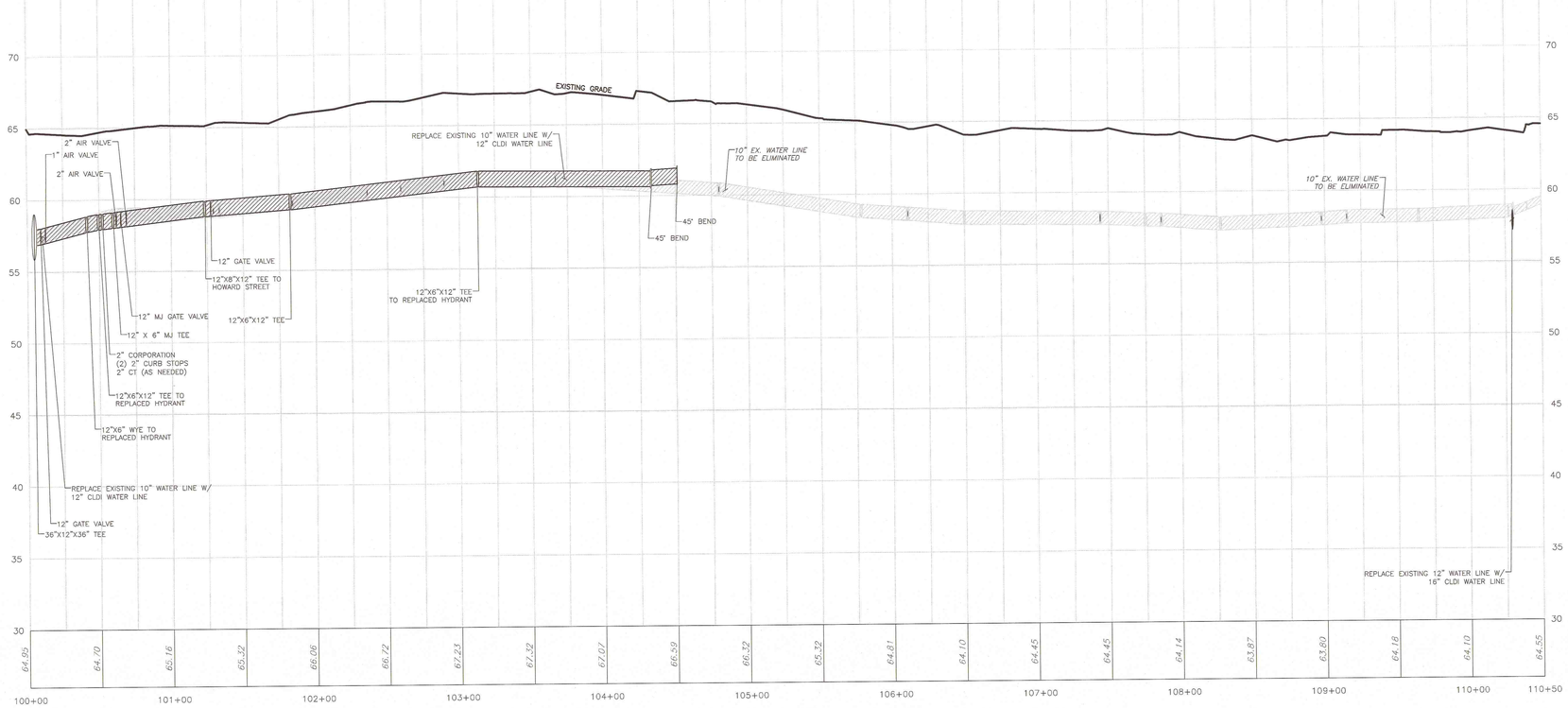

DIG SAFE

BEFORE YOU DIG CALL 811 OR 1-888-DIG-SAFE 1-888-344-7233

HORIZONTAL SCALE: 1" = 40'
VERTICAL SCALE: 1" = 4'

N:\PROJECTS\1839-02\CIVIL\DRAWINGS\CURRENT\C-1839-02 - PROFILES - WATER IMPROVEMENTS.DWG

ENGINEER :

ALLEN & MAJOR ASSOCIATES, INC.
civil • structural • traffic • land surveying
environmental consulting • landscape architecture
100 CUMMINGS CENTER
SUITE 351M
BEVERLY, MA
TEL: (781) 245-0889
FAX: (781) 245-0895
WORCESTER, MA • LAKEVILLE, MA • MANCHESTER, NH

SEAL:

COMMONWEALTH OF MASSACHUSETTS
TIMOTHY J. WILLIAMS
CIVIL
No. 43119
REGISTERED PROFESSIONAL ENGINEER

CONSULTANT:

OWNER :

MGM RESORTS INTERNATIONAL
3260 Industrial Road, Las Vegas,NV 89109
702.692.9622 Phone 702.862.1750 Fax

MGM SPRINGFIELD
SPRINGFIELD, MA

PROJECT
MGM SPRINGFIELD - SITE/CIVIL RECORD

REVISIONS :

NO.	DATE	ISSUE
1	10/23/15	SITE PLAN APPROVAL

THIS DRAWING HAS BEEN PREPARED IN ELECTRONIC FORMAT. CLIENT/CLIENT'S REPRESENTATIVE OR CONSULTANT MAY BE PERMITTED TO RECEIVE COPIES OF THIS DRAWING ON MAGNETIC MEDIA FOR HIS/HER INFORMATION AND USE FOR SPECIFIC APPLICATION TO THIS PROJECT, DUE TO THE POTENTIAL THAT THE MAGNETIC INFORMATION MAY BE MODIFIED UNINTENTIONALLY OR OTHERWISE, ALLEN & MAJOR ASSOCIATES, INC. MAY REMOVE ALL IDENTIFICATION FROM THE MAGNETIC MEDIA. FOR HARD COPY GRAPHIC MEDIA, PRINTED REPRESENTATIONS OF THE DRAWINGS AND SPECIFICATIONS ISSUED SHALL BE THE ONLY RECORD COPIES OF ALLEN & MAJOR ASSOCIATES, INC.'S WORK PRODUCT.

Copyright 2015 Allen & Major Associates, Inc. All Rights Reserved

DRAWING TITLE :

WATER MAIN IMPROVEMENTS PLAN & PROFILE BLISS STREET

All dimensions, levels, layouts and field conditions shall be verified at the site by the contractor before proceeding with the work.

MRID Project No.	58012MASS
Consultant Project No.	1839-02D
Date:	08/14/2015

Drawn By	Checked By	Approved By
KEA	TJW	TJW

File Name: C1839-02D

W-5

NOTES:
1. REFERENCE PLANS: EX-1, EX-2, C-2A, C-2B, C-3A, C-3B, C-3C, & C-3D.
2. IF A CONFLICT IS FOUND BETWEEN THE PLAN/PROFILE SHEETS AND THE REFERENCE SHEETS, INFORMATION SHOWN ON THE REFERENCE SHEETS SHALL GOVERN.
3. EXISTING STRUCTURES AND PIPES NOTED IN PROFILE VIEW AS TO BE ELIMINATED SHALL BE EITHER REMOVED IN ENTIRETY AND APPROPRIATELY BACKFILLED OR FILLED WITH FLOW FILL, AT THE CONTRACTOR'S DISCRETION.
4. CONTRACTOR TO VERIFY UTILITY SERVICES TO BE ABANDONED. ALL UTILITY SERVICE LATERALS TO BE ABANDONED SHALL BE COMPLETELY REMOVED FROM THE CITY RIGHT-OF-WAY.

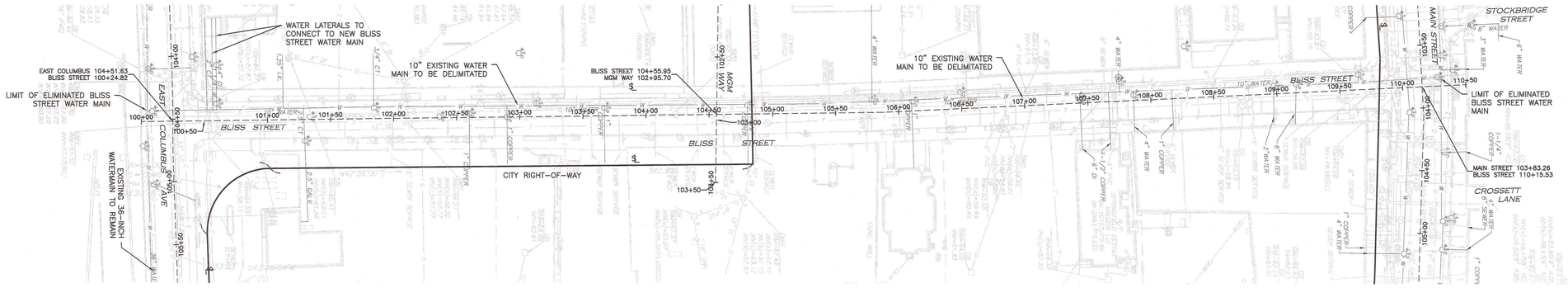

BLISS STREET CENTERLINE PROFILE

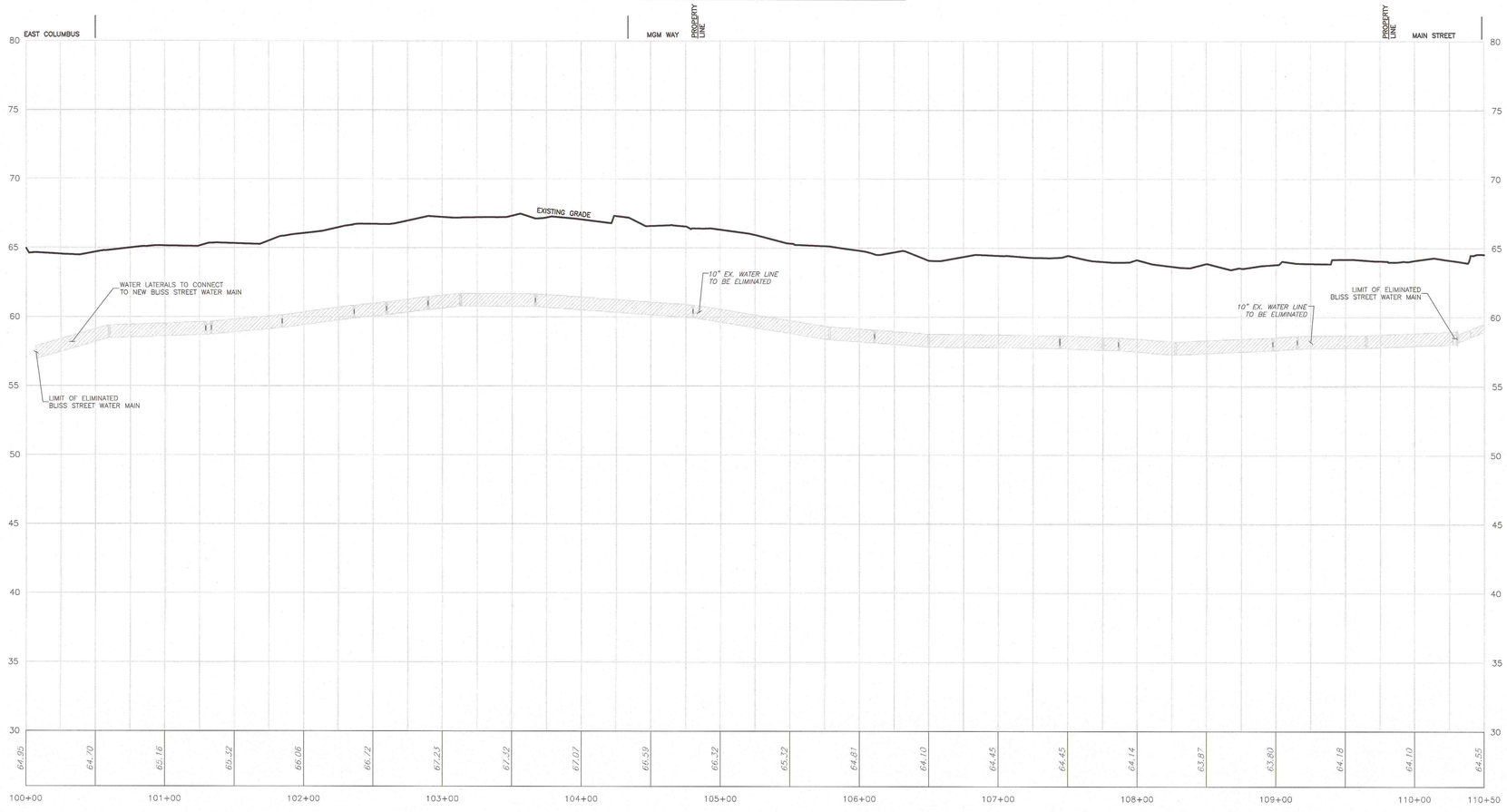

DIG SAFE
BEFORE YOU DIG CALL 811 OR 1-888-DIG-SAFE 1-888-344-7233

HORIZONTAL SCALE: 1" = 40'
VERTICAL SCALE: 1" = 4'

N:\PROJECTS\1839-02\CIVIL\DRAWINGS\CURRENT\C-1839-02 - PROFILES - WATER CONNECTIONS.DWG

ENGINEER:

ALLEN & MAJOR ASSOCIATES, INC.
CIVIL & structural engineering land surveying
100 Cummings Center, Suite 235C, Beverly, MA 01915
www.allenmajor.com
P.O. BOX 2180
WOBURN, MA 01888-0180
TEL: (781) 935-1588
FAX: (781) 935-2896
WOBURN, MA • LAKEVILLE, MA • MANCHESTER, NH

SEAL:

COMMONWEALTH OF MASSACHUSETTS
TIMOTHY J. WILLIAMS
CIVIL
No. 43119
REGISTERED PROFESSIONAL ENGINEER
10/23/15

CONSULTANT:

OWNER:

MGM RESORTS INTERNATIONAL
3260 Industrial Road, Las Vegas, NV 89109
702.692.9622 Phone 702.862.1750 Fax

PROJECT: MGM SPRINGFIELD - SITE/CIVIL RECORD
MGM SPRINGFIELD
SPRINGFIELD, MA

REVISIONS:

NO.	DATE	ISSUE
1	10/23/15	SITE PLAN APPROVAL

THIS DRAWING HAS BEEN PREPARED IN ELECTRONIC FORMAT. CLIENT/CLIENT'S REPRESENTATIVE OR CONSULTANT MAY BE PROVIDED COPIES OF DRAWINGS AND SPECIFICATIONS ON MAGNETIC MEDIA FOR THEIR USE IN CONNECTION WITH THE PROJECT APPLICATION TO THIS PROJECT, DUE TO THE POTENTIAL THAT THE MAGNETIC INFORMATION MAY BE MODIFIED UNINTENTIONALLY OR OTHERWISE, ALLEN & MAJOR ASSOCIATES, INC. MAY REMOVE ALL INDICATION OF THE DOCUMENT'S AUTHORSHIP ON THE MAGNETIC MEDIA. THE HARD COPY OF THE DRAWINGS AND SPECIFICATIONS ISSUED SHALL BE THE ONLY RECORDED AS OF ALLEN & MAJOR ASSOCIATES, INC'S WORK PRODUCT.

Copyright 2015 Allen & Major Associates, Inc.
All Rights Reserved

DRAWING TITLE:

WATER MAIN CONNECTIONS PLAN & PROFILE BLISS STREET

All dimensions, levels, layouts and field conditions shall be verified at the site by the contractor before proceeding with the work.

MRID Project No.	59012MASS
Consultant Project No.	1839-02D
Date:	08/14/2015

Drawn By	Checked By	Approved By
KEA	TJW	TJW

File Name: C1839-02D

W-6

NOTES:

1. REFERENCE PLANS: EX-1, EX-2, C-2A, C-2B, C-3A, C-3B, C-3C, & C-3D.
2. IF A CONFLICT IS FOUND BETWEEN THE PLAN/PROFILE SHEETS AND THE REFERENCE SHEETS, INFORMATION SHOWN ON THE REFERENCE SHEETS SHALL GOVERN.
3. EXISTING STRUCTURES AND PIPES NOTED IN PROFILE VIEW AS TO BE ELIMINATED SHALL BE EITHER REMOVED IN ENTIRETY AND APPROPRIATELY BACKFILLED OR FILLED WITH FLOW FILL, AT THE CONTRACTOR'S DISCRETION.
4. CONTRACTOR TO VERIFY UTILITY SERVICES TO BE ABANDONED. ALL UTILITY SERVICE LATERALS TO BE ABANDONED SHALL BE COMPLETELY REMOVED FROM THE CITY RIGHT-OF-WAY.
5. REFERENCE SHEETS C-3C & C-3D FOR TYPICAL HYDRANT ASSEMBLY.

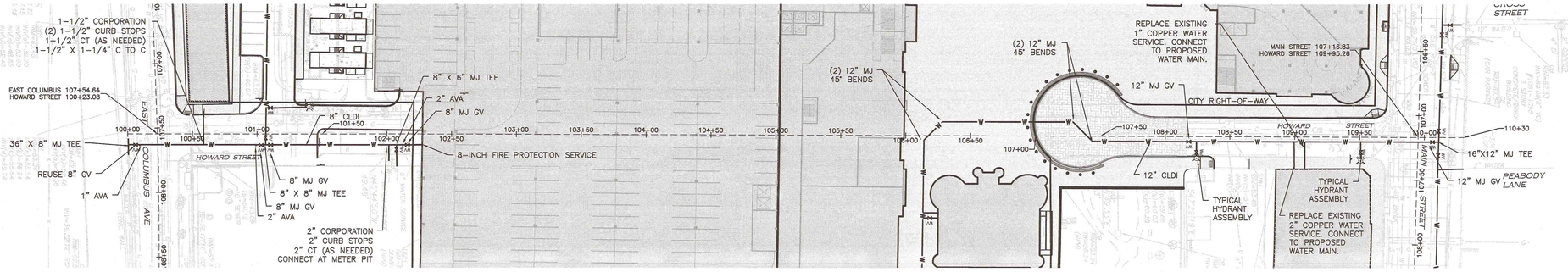

HOWARD STREET CENTERLINE PROFILE

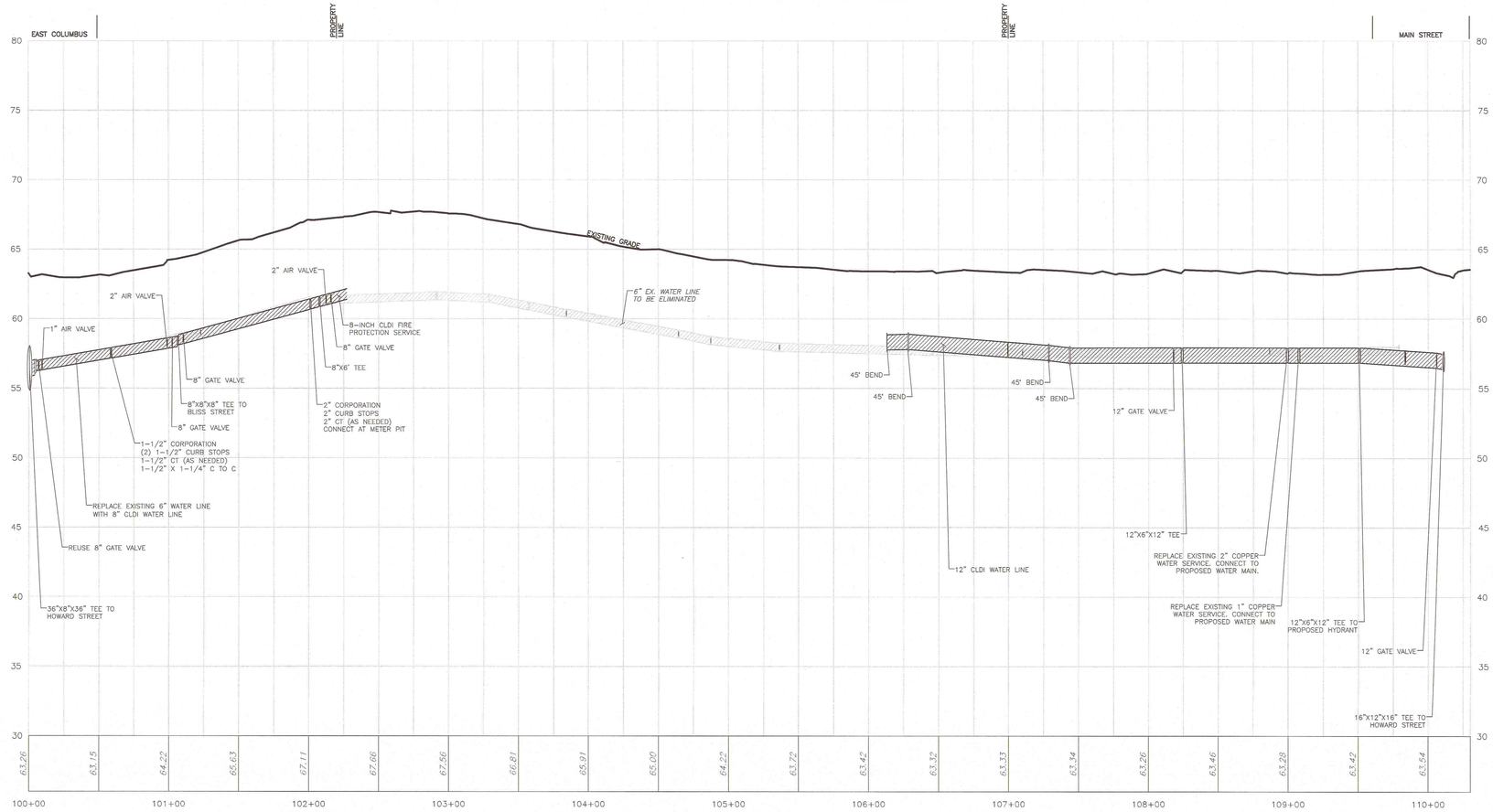

HORIZONTAL SCALE: 1" = 40'
VERTICAL SCALE: 1" = 4'

DIG SAFE

BEFORE YOU DIG
CALL 811 OR
1-888-DIG-SAFE
1-888-344-7233

N:\PROJECTS\1839-02\CIVIL\DRAWINGS\CURRENT\C-1839-02 - PROFILES - WATER IMPROVEMENTS.DWG

ENGINEER:

ALLEN & MAJOR ASSOCIATES, INC.
civil & structural engineering • land surveying
400 EAST PARKCHESTER ROAD
SAN ANTONIO, TEXAS 78216
(210) 349-0293
FAX: (210) 545-3896
WORCESTER, MA • MANCHESTER, NH
BOSTON, MA • SEATTLE, WA • WASHINGTON, DC

SEAL:

COMMONWEALTH OF MASSACHUSETTS
TIMOTHY J. WILLIAMS
CIVIL
No. 43119
REGISTERED PROFESSIONAL ENGINEER

CONSULTANT:

OWNER:

MGM RESORTS INTERNATIONAL
3260 Industrial Road, Las Vegas,NV 89109
702.692.9622 Phone 702.862.1750 Fax

MGM SPRINGFIELD
SPRINGFIELD, MA

PROJECT:
MGM SPRINGFIELD - SITE/CIVIL RECORD

REVISIONS:

NO.	DATE	ISSUE
1	10/23/15	SITE PLAN APPROVAL

THIS DRAWING HAS BEEN PREPARED IN ELECTRONIC FORMAT. CERTAIN ELEMENTS OF THE GRAPHIC OR CONSULTANT MAY BE OMITTED FROM THE ELECTRONIC MEDIA FOR REASONS OF CLARITY. THE GRAPHIC MEDIA FOR REUSER INFORMATION AND USE FOR SPECIFIC APPLICATION TO THIS PROJECT, DUE TO THE POTENTIAL THAT THE MAGNETIC INFORMATION MAY BE MODIFIED UNINTENTIONALLY OR WITHOUT THE KNOWLEDGE OF THE AUTHOR, THE USE OR REUSE OR MODIFICATION OF THE DOCUMENTS AUTHENTICITY ON THE MAGNETIC MEDIA, PRINTED REPRESENTATIONS OF THE DRAWINGS AND SPECIFICATIONS ISSUED SHALL BE THE ONLY RECORD COPIES OF ALLEN & MAJOR ASSOCIATES, INC.'S WORK PRODUCT.

Copyright 2015 Allen & Major Associates, Inc.
All Rights Reserved.

DRAWING TITLE:

WATER MAIN IMPROVEMENTS PLAN & PROFILE HOWARD STREET

All dimensions, levels, layouts and field conditions shall be verified at the site by the contractor before proceeding with the work.

MRID Project No.	58012MASS
Consultant Project No.	1839-02D
Date:	08/14/2015

Drawn By	Checked By	Approved By
KEA	TJW	TJW

File Name: C1839-02D

W-7

NOTES:
1. REFERENCE PLANS: EX-1, EX-2, C-2A, C-2B, C-3A, C-3B, C-3C, & C-3D.
2. IF A CONFLICT IS FOUND BETWEEN THE PLAN/PROFILE SHEETS AND THE REFERENCE SHEETS, INFORMATION SHOWN ON THE REFERENCE SHEETS SHALL GOVERN.
3. EXISTING STRUCTURES AND PIPES NOTED IN PROFILE VIEW AS TO BE ELIMINATED SHALL BE EITHER REMOVED IN ENTIRETY AND APPROPRIATELY BACKFILLED OR FILLED WITH FLOW FILL, AT THE CONTRACTOR'S DISCRETION.
4. CONTRACTOR TO VERIFY UTILITY SERVICES TO BE ABANDONED. ALL UTILITY SERVICE LATERALS TO BE ABANDONED SHALL BE COMPLETELY REMOVED FROM THE CITY RIGHT-OF-WAY.

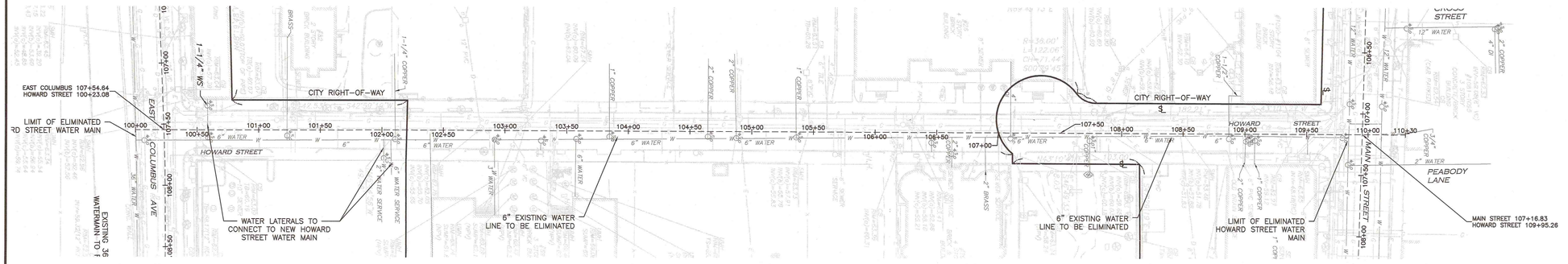

HOWARD STREET CENTERLINE PROFILE

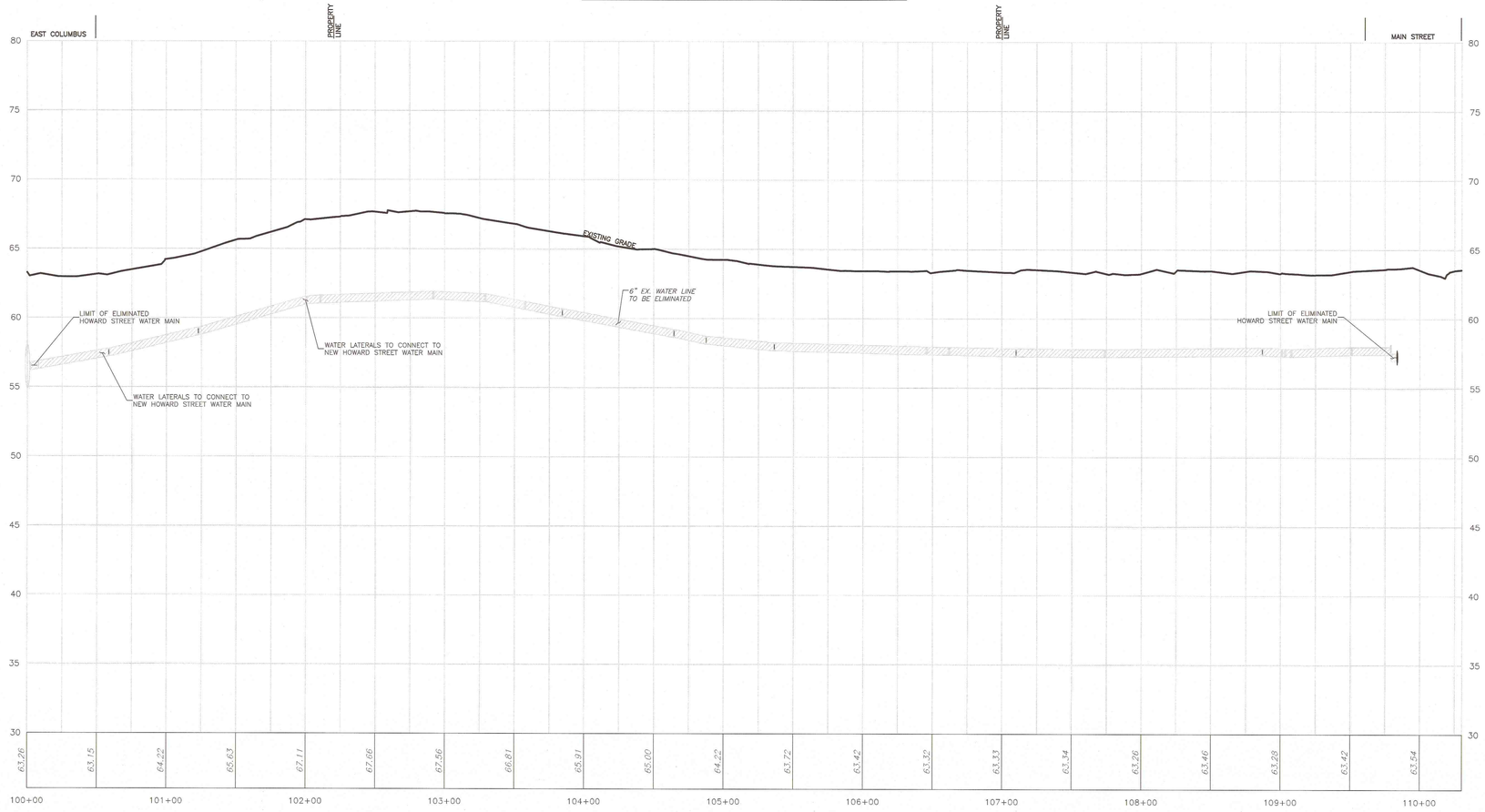

DIG SAFE
BEFORE YOU DIG CALL 811 OR 1-888-DIG-SAFE 1-888-344-7233

HORIZONTAL SCALE: 1" = 40'
VERTICAL SCALE: 1" = 4'

N:\PROJECTS\1839-02\CIVIL\DRAWINGS\CURRENT\C-1839-02 - PROFILES - WATER CONNECTIONS.DWG

ENGINEER:
ALLEN & MAJOR ASSOCIATES, INC.
civil & surveying engineering land surveying
100 Grandview Road, Suite 201
Braintree, MA 02184
P.O. BOX 3101
WORCESTER, MA 01613-3101
TEL: (781) 935-6889
FAX: (781) 935-6888
WORCESTER, MA • LAKEVILLE, MA • MANCHESTER, NH

SEAL:
COMMONWEALTH OF MASSACHUSETTS
TIMOTHY J. WILLIAMS
CIVIL
No. 43119
REGISTERED PROFESSIONAL ENGINEER
10/23/15

CONSULTANT:

OWNER:
MGM RESORTS INTERNATIONAL
3260 Industrial Road, Las Vegas, NV 89109
702.692.9622 Phone 702.862.1750 Fax

PROJECT:
MGM SPRINGFIELD
SPRINGFIELD, MA
MGM SPRINGFIELD - SITE/CIVIL RECORD

REVISIONS:

NO.	DATE	ISSUE
1	10/23/15	SITE PLAN APPROVAL

THIS DRAWING HAS BEEN PREPARED IN ELECTRONIC FORMAT. CLIENT/CLIENT'S REPRESENTATIVE OR CONSULTANT MAY BE PROVIDED COPIES OF DRAWINGS AND SPECIFICATIONS ON MAGNETIC MEDIA FOR HIS/HER INFORMATION AND USE FOR SPECIFIC APPLICATION TO THIS PROJECT. DUE TO THE POTENTIAL THAT THE MAGNETIC MEDIA INFORMATION MAY BE MODIFIED, CORRUPTED OR OTHERWISE, ALLEN & MAJOR ASSOCIATES, INC. MAY REMOVE ALL INDICATION OF THE DOCUMENTS AUTHORSHIP ON THE MAGNETIC MEDIA. PRINTED REPRESENTATIONS OF THE DRAWINGS AND SPECIFICATIONS ISSUED SHALL BE THE ONLY RECORD COPIES OF ALLEN & MAJOR ASSOCIATES, INC.'S WORK PRODUCT.

Copyright 2015 Allen & Major Associates, Inc.
All Rights Reserved

DRAWING TITLE:
WATER MAIN CONNECTIONS PLAN & PROFILE HOWARD STREET

All dimensions, levels, layouts and field conditions shall be verified at the site by the contractor before proceeding with the work.

MRID Project No.	58012MASS
Consultant Project No.	1839-02D
Date:	08/14/2015

Drawn By	Checked By	Approved By
KEA	TJW	TJW

File Name: C1839-02D

W-8

NOTES:
1. REFERENCE PLANS: EX-1, EX-2, C-2A, C-2B, C-3A, C-3B, C-3C, & C-3D.
2. IF A CONFLICT IS FOUND BETWEEN THE PLAN/PROFILE SHEETS AND THE REFERENCE SHEETS, INFORMATION SHOWN ON THE REFERENCE SHEETS SHALL GOVERN.
3. EXISTING STRUCTURES AND PIPES NOTED IN PROFILE VIEW AS TO BE ELIMINATED SHALL BE EITHER REMOVED IN ENTIRETY AND APPROPRIATELY BACKFILLED OR FILLED WITH FLOW FILL, AT THE CONTRACTOR'S DISCRETION.
4. CONTRACTOR TO VERIFY UTILITY SERVICES TO BE ABANDONED. ALL UTILITY SERVICE LATERALS TO BE ABANDONED SHALL BE COMPLETELY REMOVED FROM THE CITY RIGHT-OF-WAY.
5. REFERENCE SHEETS C-3C & C-3D FOR TYPICAL HYDRANT ASSEMBLY.

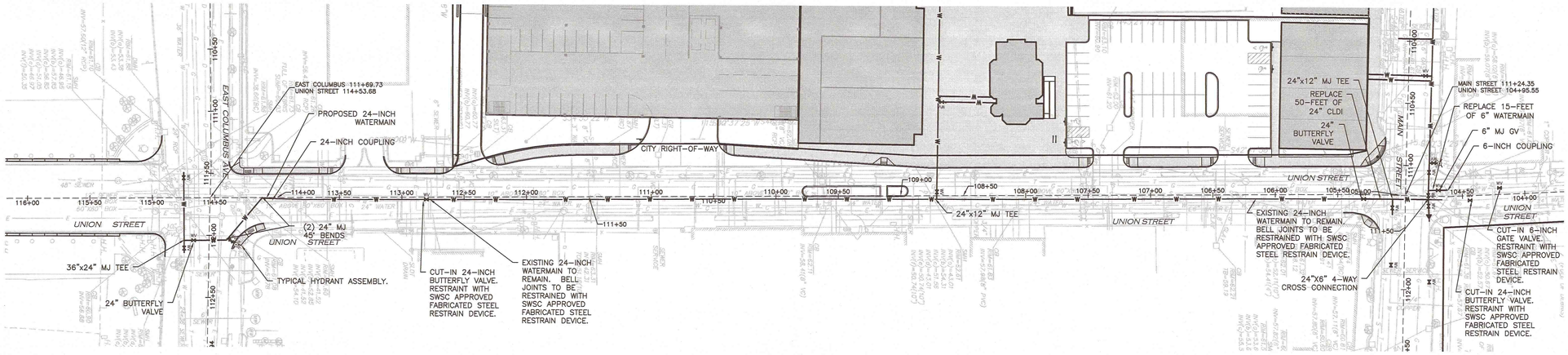

UNION STREET CENTERLINE PROFILE

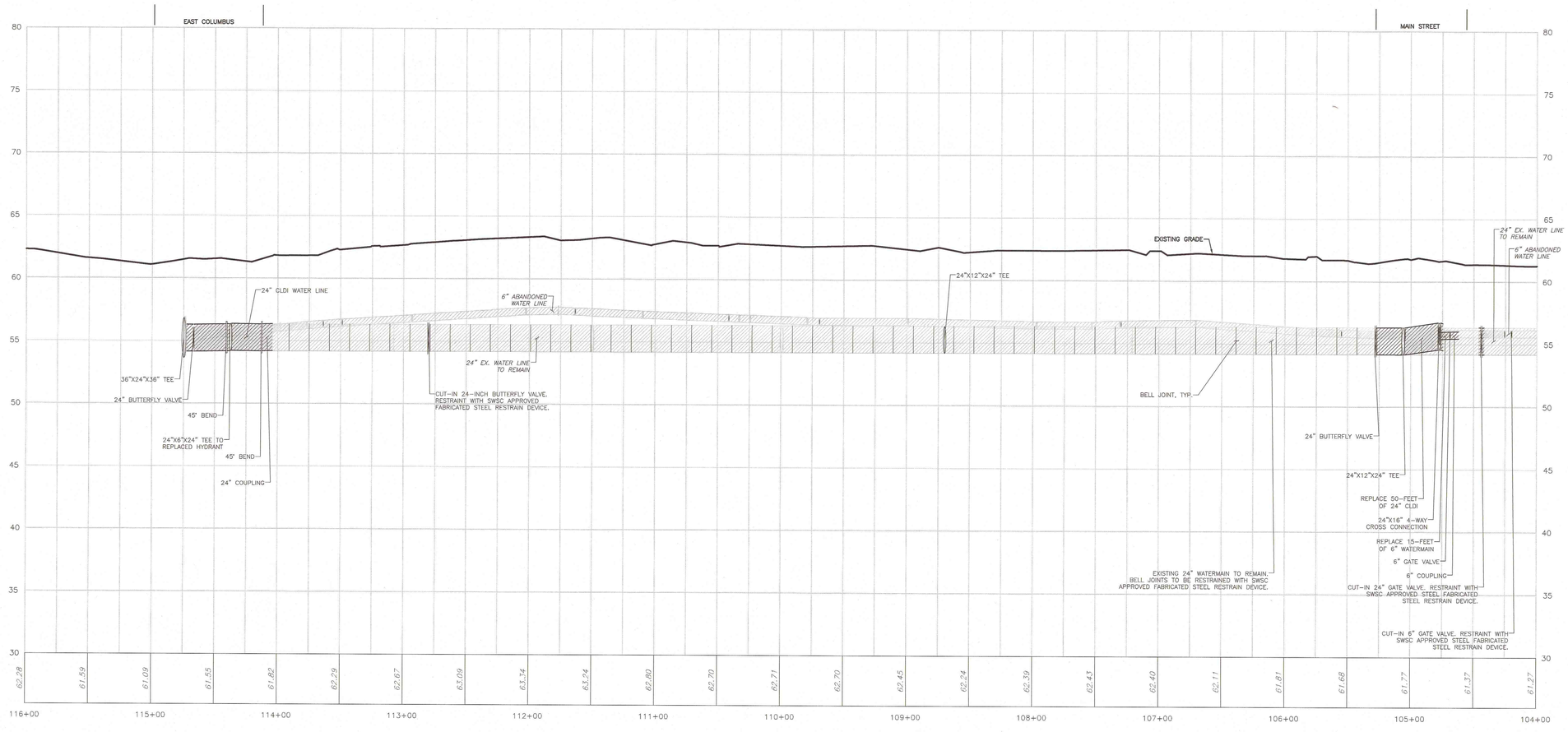

DIG SAFE

BEFORE YOU DIG CALL 811 OR 1-888-DIG-SAFE 1-888-344-7233

HORIZONTAL SCALE: 1" = 40'
VERTICAL SCALE: 1" = 4'

N:\PROJECTS\1839-02\CIVIL\DRAWINGS\CURRENT\C-1839-02 - PROFILES - WATER IMPROVEMENTS.DWG

ENGINEER:

ALLEN & MAJOR ASSOCIATES, INC.
civil & structural engineering • land surveying
100 CUMMINGS CENTER, SUITE 451G
BEVERLY, MA 01915-6181
(978) 922-8031
FAX: (781) 935-8898
WORCESTER, MA • MANCHESTER, NH

SEAL:

COMMONWEALTH OF MASSACHUSETTS
TIMOTHY J. WILLIAMS
CIVIL
No. 43119
REGISTERED PROFESSIONAL ENGINEER
10/23/15

CONSULTANT:

OWNER:

MGM RESORTS INTERNATIONAL
3260 Industrial Road, Las Vegas, NV 89109
702.692.9622 Phone 702.862.1750 Fax

MGM SPRINGFIELD
SPRINGFIELD, MA

PROJECT: MGM SPRINGFIELD - SITE/CIVIL RECORD

REVISIONS:

NO.	DATE	ISSUE
1	10/23/15	SITE PLAN APPROVAL

THIS DRAWING HAS BEEN PREPARED IN ELECTRONIC FORMAT. CLIENT/CLIENT'S REPRESENTATIVE OR CONSULTANT MAY BE PROVIDED COPIES OF DRAWING AND SPECIFICATIONS ON MAGNETIC MEDIA FOR INFORMATION PURPOSES ONLY TO USE FOR SPECIFIC APPLICATIONS HEREUNDER. DUE TO THE POSSIBILITY THAT THE MAGNETIC INFORMATION MAY BE MODIFIED UNINTENTIONALLY OR OTHERWISE, ALLEN & MAJOR ASSOCIATES, INC. MAY REMOVE ALL REFERENCES TO ITSELF AND ITS CONSULTANTS FROM THE MAGNETIC MEDIA. PRINTED REPRESENTATIONS OF THE DRAWINGS AND SPECIFICATIONS ISSUED SHALL BE THE ONLY RECORD COPIES OF ALLEN & MAJOR ASSOCIATES, INC.'S WORK PRODUCT.

Copyright 2015 Allen & Major Associates, Inc.
All Rights Reserved

DRAWING TITLE:

WATER MAIN IMPROVEMENTS PLAN & PROFILE UNION STREET

All dimensions, levels, layouts and field conditions shall be verified at the site by the contractor before proceeding with the work.

MRID Project No.	58012MASS
Consultant Project No.	1839-02D
Date:	08/14/2015

Drawn By	Checked By	Approved By
KEA	TJW	TJW

File Name: C1839-02D

W-9

NOTES:
1. REFERENCE PLANS: EX-1, EX-2, C-2A, C-2B, C-3A, C-3B, C-3C, & C-3D.
2. IF A CONFLICT IS FOUND BETWEEN THE PLAN/PROFILE SHEETS AND THE REFERENCE SHEETS, INFORMATION SHOWN ON THE REFERENCE SHEETS SHALL GOVERN.
3. EXISTING STRUCTURES AND PIPES NOTED IN PROFILE VIEW AS TO BE ELIMINATED SHALL BE EITHER REMOVED IN ENTIRETY AND APPROPRIATELY BACKFILLED OR FILLED WITH FLOW FILL, AT THE CONTRACTOR'S DISCRETION.
4. CONTRACTOR TO VERIFY UTILITY SERVICES TO BE ABANDONED. ALL UTILITY SERVICE LATERALS TO BE ABANDONED SHALL BE COMPLETELY REMOVED FROM THE CITY RIGHT-OF-WAY.

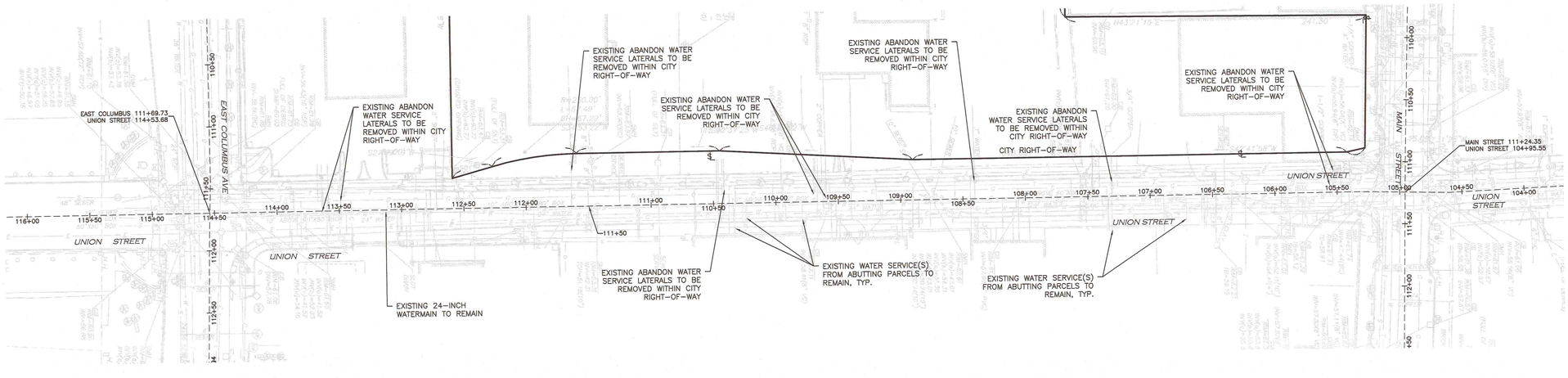

UNION STREET CENTERLINE PROFILE

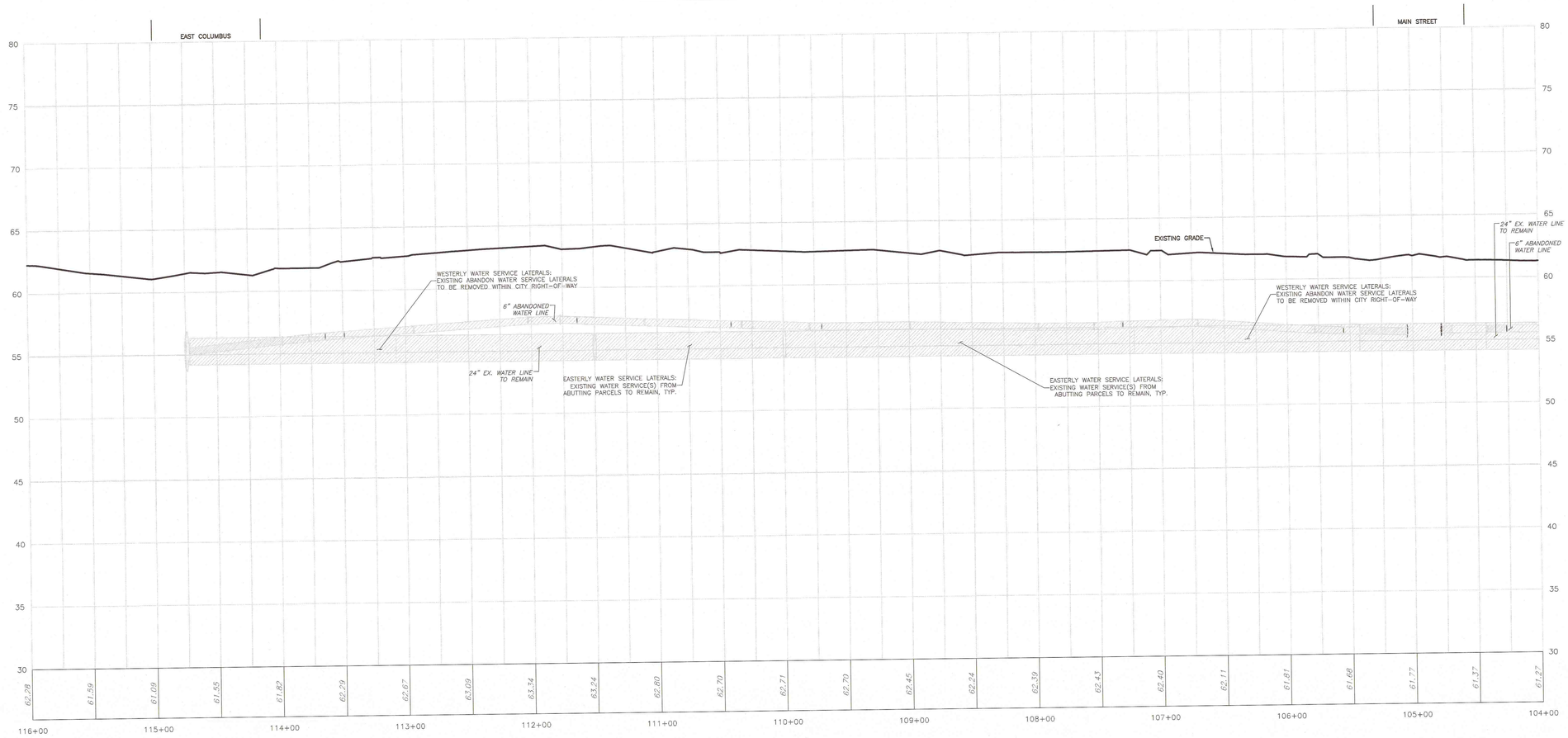

DIG SAFE
BEFORE YOU DIG CALL 811 OR 1-888-DIG-SAFE 1-888-344-7233

HORIZONTAL SCALE: 1" = 40'
VERTICAL SCALE: 1" = 4'

N:\PROJECTS\1839-02\CIVIL\DRAWINGS\CURRENT\C-1839-02 - PROFILES - WATER CONNECTIONS.DWG

ENGINEER:
ALLEN & MAJOR ASSOCIATES, INC.
civil & structural engineering land surveying
environmental permitting & landscape architecture
100 Commercial Street, Suite 304
P.O. BOX 318
Woburn, Massachusetts 01801
TEL: (781) 935-6889
FAX: (781) 935-2896
WOBURN, MA • LAKEVILLE, MA • MANCHESTER, NH

SEAL:
TIMOTHY J. WILLIAMS CIVIL No.43119 REGISTERED PROFESSIONAL ENGINEER
COMMONWEALTH OF MASSACHUSETTS
10/23/15

CONSULTANT:

OWNER:
MGM RESORTS INTERNATIONAL
3260 Industrial Road, Las Vegas,NV 89109
702.692.9622 Phone 702.862.1750 Fax

PROJECT: MGM SPRINGFIELD - SITE/CIVIL RECORD
MGM SPRINGFIELD
SPRINGFIELD, MA

REVISIONS:

NO.	DATE	ISSUE
1	10/23/15	SITE PLAN APPROVAL

THIS DRAWING HAS BEEN PREPARED IN ELECTRONIC FORMAT. CLIENT/CLIENT'S REPRESENTATIVE OR CONSULTANT MAY BE PROVIDED COPIES OF DRAWINGS AND SPECIFICATIONS ON MAGNETIC MEDIA FOR THEIR CONVENIENCE IN THE USE OF THIS PROJECT APPLICATION TO THIS PROJECT. DUE TO THE POTENTIAL THAT THE MAGNETIC INFORMATION MAY BE MODIFIED UNINTENTIONALLY OR OTHERWISE, ALLEN & MAJOR ASSOCIATES, INC. MAKES NO ALL INDICATION OF THE DOCUMENTS CONTAINED ON THE MAGNETIC MEDIA. THE HARD COPY PRINTOUTS OF THE DRAWINGS AND SPECIFICATIONS ISSUED SHALL BE THE ONLY RECORD COPIES OF ALLEN & MAJOR ASSOCIATES, INC.'S WORK PRODUCT.

Copyright 2015 Allen & Major Associates, Inc
All Rights Reserved

DRAWING TITLE:
WATER MAIN CONNECTIONS PLAN & PROFILE UNION STREET

All dimensions, levels, layouts and field conditions shall be verified at the site by the contractor before proceeding with the work.

MRID Project No. 58012MASS
Consultant Project No. 1839-02D
Date: 08/14/2015

Drawn By	Checked By	Approved By
KEA	TJW	TJW

File Name: C1839-02D

W-10

NOTES:

1. REFERENCE PLANS: EX-1, EX-2, C-2A, C-2B, C-3A, C-3B, C-3C, & C-3D.
2. IF A CONFLICT IS FOUND BETWEEN THE PLAN/PROFILE SHEETS AND THE REFERENCE SHEETS, INFORMATION SHOWN ON THE REFERENCE SHEETS SHALL GOVERN.
3. EXISTING STRUCTURES AND PIPES NOTED IN PROFILE VIEW AS TO BE ELIMINATED SHALL BE EITHER REMOVED IN ENTIRETY AND APPROPRIATELY BACKFILLED OR FILLED WITH FLOW FILL, AT THE CONTRACTOR'S DISCRETION.
4. CONTRACTOR TO VERIFY UTILITY SERVICES TO BE ABANDONED. ALL UTILITY SERVICE LATERALS TO BE ABANDONED SHALL BE COMPLETELY REMOVED FROM THE CITY RIGHT-OF-WAY.
5. REFERENCE SHEETS C-3C & C-3D FOR TYPICAL HYDRANT ASSEMBLY.

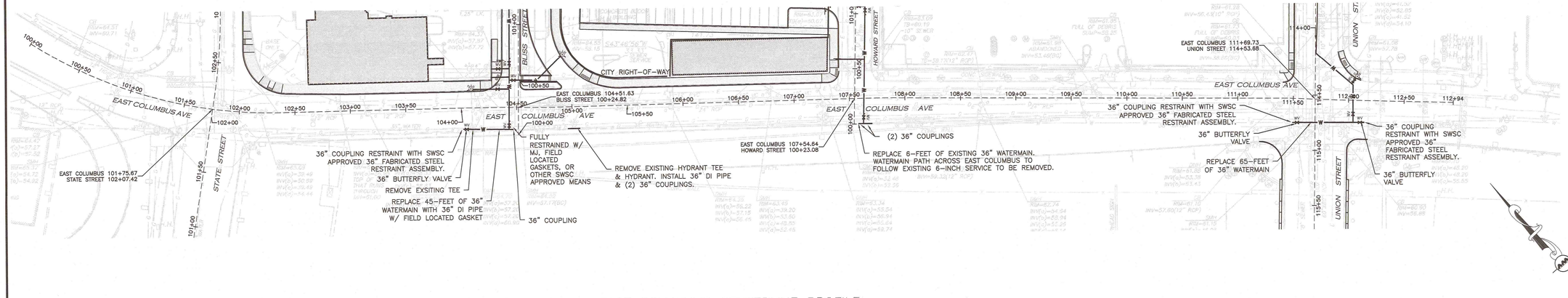

EAST COLUMBUS CENTERLINE PROFILE

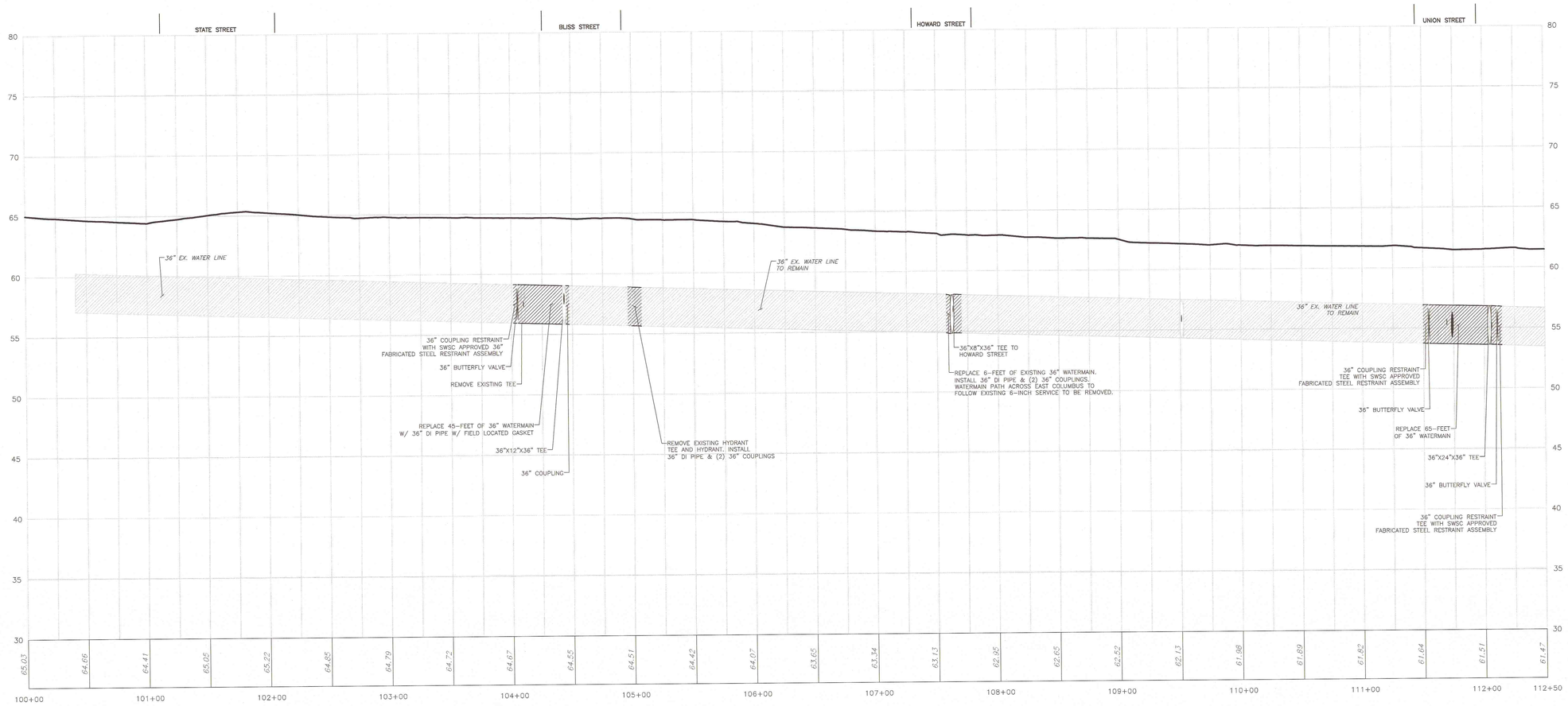

DIG SAFE

BEFORE YOU DIG CALL 811 OR 1-888-DIG-SAFE 1-888-344-7233

HORIZONTAL SCALE: 1" = 40'
VERTICAL SCALE: 1" = 4'

N:\PROJECTS\1839-02\CIVIL\DRAWINGS\CURRENT\C-1839-02 - PROFILES - WATER IMPROVEMENTS.DWG

ENGINEER:

ALLEN & MAJOR ASSOCIATES, INC.
civil engineering • land planning • surveying
environmental consulting • landscape architecture
100 COMMERCE WAY
WOBURN, MA 01801
TEL (781) 935-6889
FAX (781) 935-2896
WOBURN, MA • EAST TAUNTON, MA • MANCHESTER, NH

SEAL:

COMMONWEALTH OF MASSACHUSETTS
TIMOTHY J. WILLIAMS
CIVIL
No. 43119
REGISTERED PROFESSIONAL ENGINEER
10/23/15

CONSULTANT:

OWNER:

MGM RESORTS INTERNATIONAL
3260 Industrial Road, Las Vegas, NV 89109
702.692.9622 Phone 702.862.1750 Fax

PROJECT: MGM SPRINGFIELD - SITE/CIVIL RECORD

MGM SPRINGFIELD
SPRINGFIELD, MA

REVISIONS:

NO.	DATE	ISSUE
1	10/23/15	SITE PLAN APPROVAL

THIS DRAWING HAS BEEN PREPARED IN ELECTRONIC FORMAT. CLIENT/CLIENT'S REPRESENTATIVE OR CONSULTANT MAY BE PROVIDED COPIES OF DRAWINGS AND SPECIFICATIONS ON MAGNETIC MEDIA FOR HELPFUL REFERENCE ONLY. BY ACCEPTING THESE MEDIA FOR USE ON THIS PROJECT, YOU ARE ON THE POTENTIAL THAT THE MAGNETIC INFORMATION MAY BE MODIFIED UNINTENTIONALLY OR CITY/ENGR, ALLEN & MAJOR ASSOCIATES, INC. MAY REMOVE ALL INDICATION OF THE DOCUMENT'S AUTHORSHIP ON THE MAGNETIC MEDIUM. FURTHERMORE, YOU AGREE TO REMOVE FROM YOUR MEDIUM, PRIOR TO USE, ANY DATA THAT IS NOT EXACTLY DUPLICATED ON THE FINAL HARD COPIES OF ALLEN & MAJOR ASSOCIATES, INC.'S WORK PRODUCT.

Copyright 2015 Allen & Major Associates, Inc. All Rights Reserved

DRAWING TITLE:

WATER MAIN IMPROVEMENTS PLAN & PROFILE E. COLUMBUS AVE.

All dimensions, levels, layouts and field conditions shall be verified at the site by the contractor before proceeding with the work.

MRID Project No.	58012MASS
Consultant Project No.	1839-02D
Date:	08/14/2015

Drawn By	Checked By	Approved By
KEA	TJW	TJW

File Name: C1839-02D

W-11

NOTES:
1. REFERENCE PLANS: EX-1, EX-2, C-2A, C-2B, C-3A, C-3B, C-3C, & C-3D.
2. IF A CONFLICT IS FOUND BETWEEN THE PLAN/PROFILE SHEETS AND THE REFERENCE SHEETS, INFORMATION SHOWN ON THE REFERENCE SHEETS SHALL GOVERN.
3. EXISTING STRUCTURES AND PIPES NOTED IN PROFILE VIEW AS TO BE ELIMINATED SHALL BE EITHER REMOVED IN ENTIRETY AND APPROPRIATELY BACKFILLED OR FILLED WITH FLOW FILL, AT THE CONTRACTOR'S DISCRETION.
4. CONTRACTOR TO VERIFY UTILITY SERVICES TO BE ABANDONED. ALL UTILITY SERVICE LATERALS TO BE ABANDONED SHALL BE COMPLETELY REMOVED FROM THE CITY RIGHT-OF-WAY.

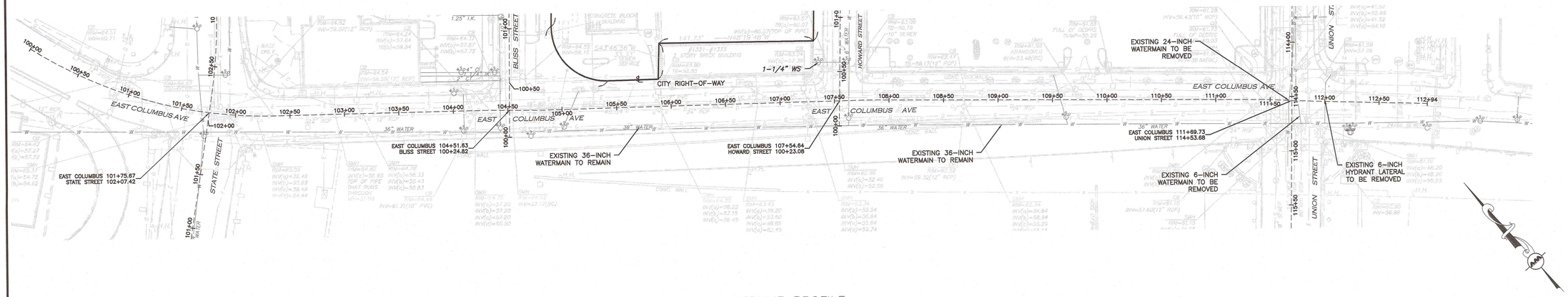

EAST COLUMBUS CENTERLINE PROFILE

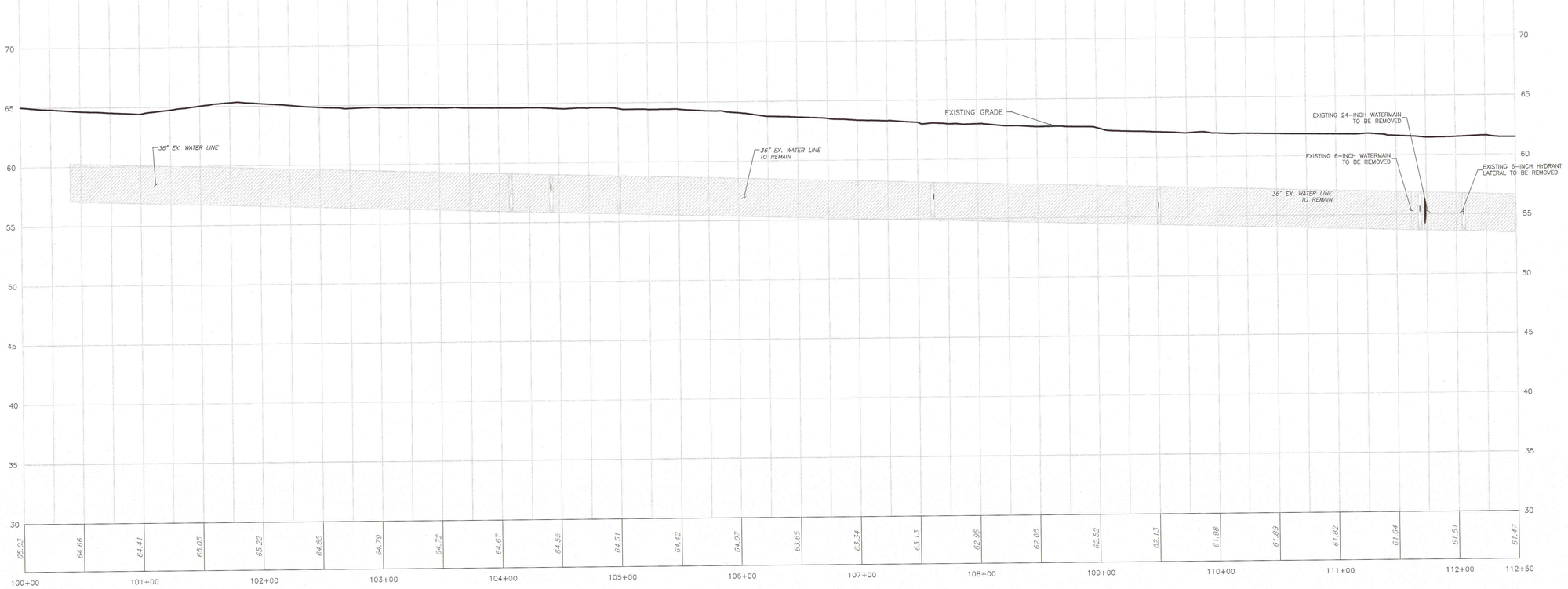

DIG SAFE

BEFORE YOU DIG CALL 811 OR 1-888-DIG-SAFE 1-888-344-7233

HORIZONTAL SCALE: 1" = 40'
VERTICAL SCALE: 1" = 4'

N:\PROJECTS\1839-02\CIVIL\DRAWINGS\CURRENT\C-1839-02 - PROFILES - WATER CONNECTIONS.DWG

ENGINEER:
ALLEN & MAJOR ASSOCIATES, INC.
civil & structural engineering • land surveying
environmental consulting • landscape architecture
100 Commercial Street
P.O. BOX 3269
Salem, NH 03079
TEL: (781) 935-6889
WEB: allenmajor.com
WOBURN, MA • LAKEVILLE, MA • MANCHESTER, NH

SEAL:

COMMONWEALTH OF MASSACHUSETTS
TIMOTHY J. WILLIAMS
CIVIL
No. 43119
REGISTERED PROFESSIONAL ENGINEER

CONSULTANT:

OWNER:
MGM RESORTS INTERNATIONAL
3260 Industrial Road, Las Vegas, NV 89109
702.692.9622 Phone 702.862.1750 Fax

MGM SPRINGFIELD
SPRINGFIELD, MA

PROJECT:
MGM SPRINGFIELD - SITE/CIVIL RECORD

REVISIONS:

NO.	DATE	ISSUE
1	10/23/15	SITE PLAN APPROVAL

THIS DRAWING HAS BEEN PREPARED IN ELECTRONIC FORMAT. CLIENT/CLIENT'S REPRESENTATIVE OR CONSULTANT MAY BE PROVIDED COPIES OF DRAWINGS AND SPECIFICATIONS ON MAGNETIC MEDIA FOR THEIR USE IN CONNECTION WITH THE PROJECT OR APPLICATION TO THIS PROJECT. DUE TO THE POTENTIAL THAT THE MAGNETIC INFORMATION MAY BE MODIFIED UNINTENTIONALLY OR CONVERSION, ALLEN & MAJOR ASSOCIATES, INC. MAY REMOVE ALL INDICATION OF THE DOCUMENT'S AUTHORSHIP ON THE MAGNETIC MEDIA. ALTERATIONS MADE TO THE PRINTED DRAWINGS OR SPECIFICATIONS ISSUED SHALL BE THE ONLY RECORD COPIES OF ALLEN & MAJOR ASSOCIATES, INC.'S WORK PRODUCT.

Copyright 2015 Allen & Major Associates, Inc.
All Rights Reserved

DRAWING TITLE:

WATER MAIN CONNECTION PLAN & PROFILE E. COLUMBUS AVE.

All dimensions, levels, layouts and field conditions shall be verified at the site by the contractor before proceeding with the work.

MRID Project No.	58012MASS
Consultant Project No.	1839-02D
Date:	08/14/2015

Drawn By	Checked By	Approved By
KEA	TJW	TJW

File Name: C1839-02D

W-12

OTES:

1. REFERENCE PLANS: EX-1, EX-2, C-2A, C-2B, C-3A, C-3B, C-3C, & C-3D.
2. IF A CONFLICT IS FOUND BETWEEN THE PLAN/PROFILE SHEETS AND THE REFERENCE SHEETS, INFORMATION SHOWN ON THE REFERENCE SHEETS SHALL GOVERN.
3. EXISTING STRUCTURES AND PIPES NOTED IN PROFILE VIEW AS TO BE ELIMINATED SHALL BE EITHER REMOVED IN ENTIRETY AND APPROPRIATELY BACKFILLED OR FILLED WITH FLOW FILL, AT THE CONTRACTOR'S DISCRETION.
4. CONTRACTOR TO VERIFY UTILITY SERVICES TO BE ABANDONED. ALL UTILITY SERVICE LATERALS TO BE ABANDONED SHALL BE COMPLETELY REMOVED FROM THE CITY RIGHT-OF-WAY.
5. REFERENCE SHEETS C-3C & C-3D FOR TYPICAL HYDRANT ASSEMBLY.

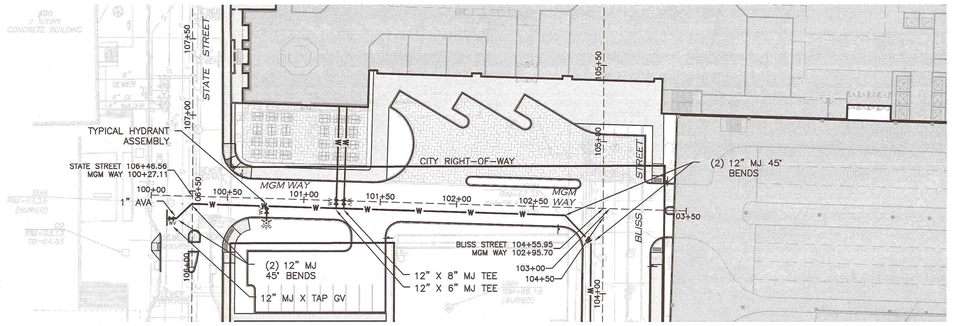

MGM WAY CENTERLINE PROFILE

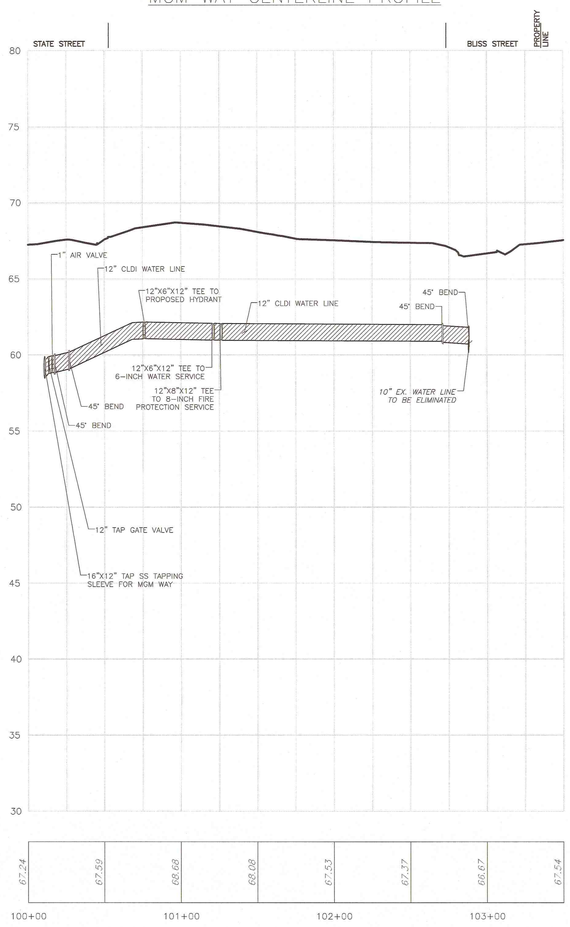

DIG SAFE

BEFORE YOU DIG CALL 811 OR 1-888-DIG-SAFE 1-888-344-7233

HORIZONTAL SCALE: 1" = 40'
VERTICAL SCALE: 1" = 4'

N:\PROJECTS\1839-02\CIVIL\DRAWINGS\CURRENT\C-1839-02 - PROFILES - WATER IMPROVEMENTS.DWG

ENGINEER :

ALLEN & MAJOR ASSOCIATES, INC.
civil & structural engineering land surveying
environmental services
100 COMMERCE WAY
WOBURN, MA 01801
TEL: (781) 935-6468
FAX: (781) 935-8832
WOBURN, MA • PORTSMOUTH, NH • MANCHESTER, NH

SEAL:

COMMONWEALTH OF MASSACHUSETTS
TIMOTHY J. WILLIAMS
CIVIL
No.43119
REGISTERED PROFESSIONAL ENGINEER

CONSULTANT:

OWNER :

MGM RESORTS INTERNATIONAL
3260 Industrial Road, Las Vegas,NV 89109
702.692.9622 Phone 702.862.1750 Fax

MGM SPRINGFIELD
SPRINGFIELD, MA

PROJECT:
MGM SPRINGFIELD - SITE/CIVIL RECORD

REVISIONS :

NO.	DATE	ISSUE
1	10/23/15	SITE PLAN APPROVAL

THIS DRAWING HAS BEEN PREPARED IN ELECTRONIC FORMAT. CLIENT/CLIENT'S REPRESENTATIVE OR CONSULTANT MAY BE PROVIDED WITH COPIES OF THE DRAWINGS AND SPECIFICATIONS ON MEDIA FOR CLIENT'S USE PROVIDED THAT THE FOLLOWING APPLICATION TO THIS PROJECT, DUE TO THE POTENTIAL THAT THE MAGNETIC INFORMATION MAY BE MODIFIED UNINTENTIONALLY OR OTHERWISE BY OTHER PARTIES AND THAT THE ACCURATE TRANSLATION OF THE DOCUMENTS AUTHENTIC ON THE MAGNETIC MEDIA, PRINTED REPRESENTATIONS OF THE DRAWINGS AND SPECIFICATIONS ISSUED SHALL BE THE ONLY RECORD COPIES OF ALLEN & MAJOR ASSOCIATES, INC.'S WORK PRODUCT.

Copyright 2015 Allen & Major Associates, Inc.
All Rights Reserved.

DRAWING TITLE :

WATER MAIN IMPROVEMENTS PLAN & PROFILE MGM WAY

All dimensions, levels, layouts and field conditions shall be verified at the site by the contractor before proceeding with the work.

MRID Project No.	59012MASS
Consultant Project No.	1839-02D
Date:	08/14/2015

Drawn By	Checked By	Approved By
KEA	TJW	TJW

File Name: C1839-02D

W-13

NOTE: THE FOLLOWING APPROXIMATE MAIN STREET SEWER MAIN ACTIVE TAP BREAK-IN LOCATIONS ARE TAKEN FROM "MGM CASINO SEWER LINE ASSESSMENT (STATE, MAIN & UNION STREET) REPORT", BY INLAND WATERS, INC., DATED AUGUST 2015.

STA 101+45.00 EXIST. SMH	STA 105+32.31 RIGHT	STA 109+32.88 LEFT
STA 101+63.40 RIGHT	STA 105+43.31 RIGHT	STA 109+61.68 RIGHT
STA 102+38.90 RIGHT	STA 105+48.11 RIGHT	STA 109+90.48 LEFT
STA 102+53.40 RIGHT	STA 105+77.81 RIGHT	STA 110+22.88 RIGHT
STA 103+02.70 RIGHT	STA 106+32.11 LEFT	STA 110+66.38 LEFT
STA 103+26.70 LEFT	STA 106+74.61 RIGHT	STA 110+78.48 RIGHT
STA 103+55.10 RIGHT	STA 107+15.17 EXIST. SMH	STA 111.24+31 EXIST. SMH
STA 103+84.30 RIGHT	STA 107+18.78 RIGHT	
STA 103+87.41 EXIST. SMH	STA 107+38.78 LEFT	
STA 104+27.91 LEFT	STA 107+68.98 RIGHT	
STA 104+30.91 RIGHT	STA 108+76.98 RIGHT	
STA 104+55.41 LEFT	STA 108+86.28 LEFT	
STA 105+00.31 LEFT	STA 109+15.18 RIGHT	
STA 105+16.11 RIGHT	STA 109+25.78 EXIST. SMH	

NOTES:
1. REFERENCE PLANS: EX-1, EX-2, C-2A, C-2B, C-3A, C-3B, C-3C, & C-3D.
2. IF A CONFLICT IS FOUND BETWEEN THE PLAN/PROFILE SHEETS AND THE REFERENCE SHEETS, INFORMATION SHOWN ON THE REFERENCE SHEETS SHALL GOVERN.
3. EXISTING STRUCTURES AND PIPES NOTED IN PROFILE VIEW AS TO BE ELIMINATED SHALL BE EITHER REMOVED IN ENTIRETY AND APPROPRIATELY BACKFILLED OR FILLED WITH FLOW FILL, AT THE CONTRACTOR'S DISCRETION.
4. CONTRACTOR TO VERIFY UTILITY SERVICES TO BE ABANDONED. ALL UTILITY SERVICE LATERALS TO BE ABANDONED SHALL BE COMPLETELY REMOVED FROM THE CITY RIGHT-OF-WAY.
5. DESIGN PLANS MAY NOT SHOW ALL ACTIVE CONNECTIONS TO THE SEWER SYSTEM. IF ACTIVE EXISTING SEWER SERVICES NOT DOCUMENTED ON THE PLANS ARE FOUND IN THE FIELD, CONTRACTOR CAN INFORM THE SWSC AND RECORD ENGINEER.

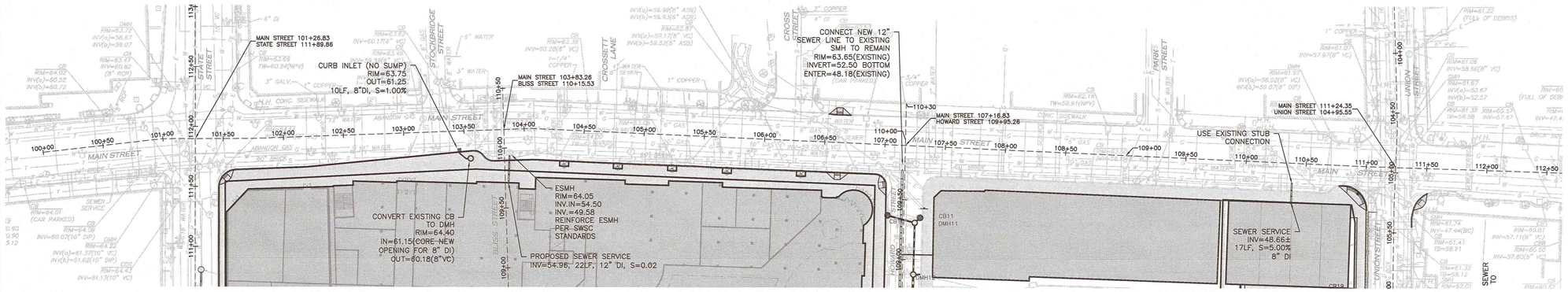

MAIN STREET CENTERLINE PROFILE

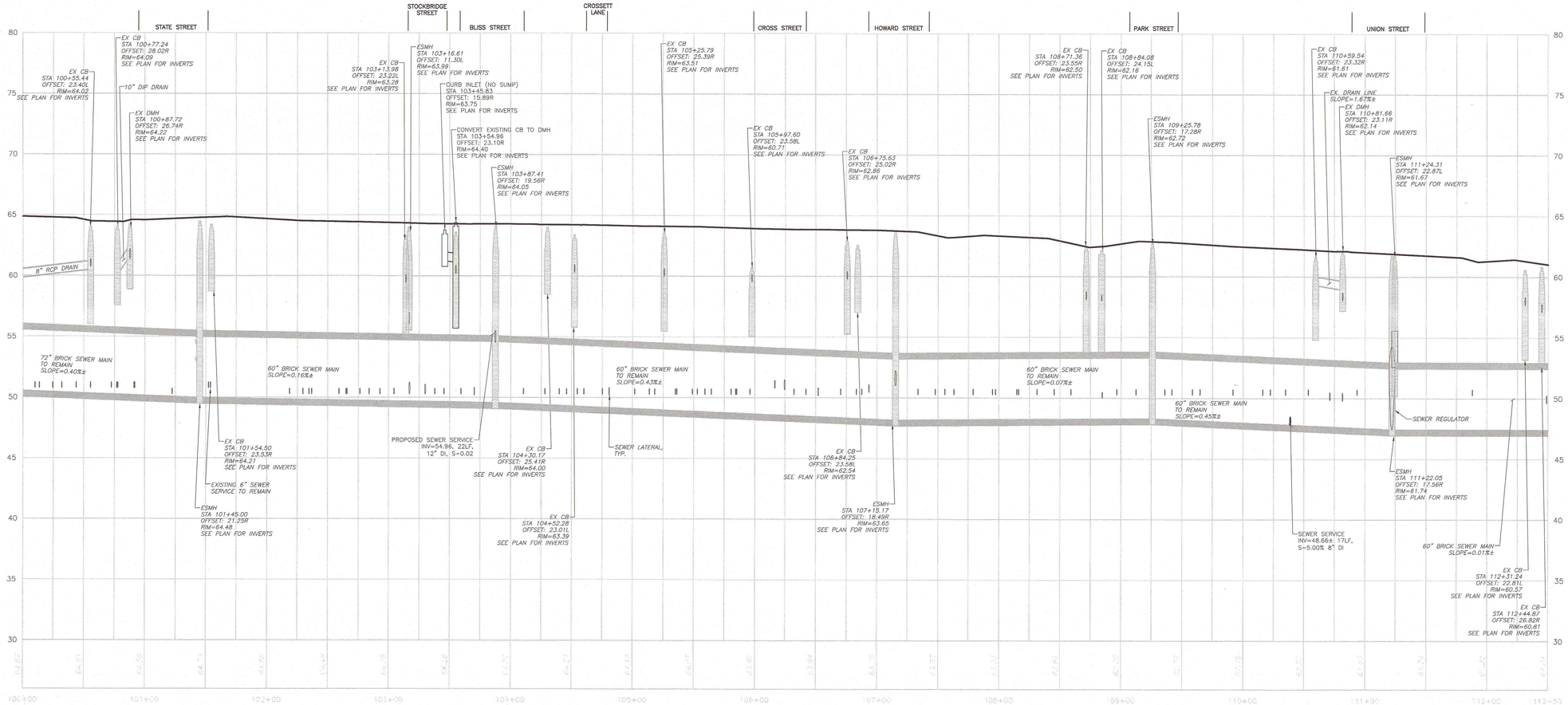

DIG SAFE

BEFORE YOU DIG CALL 811 OR 1-888-DIG-SAFE 1-888-344-7233

HORIZONTAL SCALE: 1" = 40'
VERTICAL SCALE: 1" = 4'

N:\PROJECTS\1839-02\CIVIL\DRAWINGS\CURRENT\C-1839-02 - PROFILES - SEWER DRAIN IMPROVEMENTS.DWG

ENGINEER:

ALLEN & MAJOR ASSOCIATES, INC.
civil • structural • traffic • transportation
environmental • construction management
100 CUMMINGS WAY
WOBURN, MA 01801-2106
TEL: (781) 935-6889
FAX: (781) 935-2896
WOBURN, MA • RALEIGH, NC • MANCHESTER, NH

SEAL:

COMMONWEALTH OF MASSACHUSETTS TIMOTHY J. WILLIAMS CIVIL No.43119 REGISTERED PROFESSIONAL ENGINEER

CONSULTANT:

OWNER:

MGM RESORTS INTERNATIONAL
3260 Industrial Road, Las Vegas,NV 89109
702.692.9622 Phone 702.862.1750 Fax

MGM SPRINGFIELD
SPRINGFIELD, MA

PROJECT: MGM SPRINGFIELD - SITE/CIVIL RECORD

REVISIONS:

NO.	DATE	ISSUE
1	10/23/15	SITE PLAN APPROVAL

THIS DRAWING HAS BEEN PREPARED IN ELECTRONIC FORMAT. CLIENT/CLIENT'S REPRESENTATIVE OR CONSULTANT MAY BE PERMITTED TO RECEIVE COPIES OF THIS DRAWING ON MAGNETIC MEDIA FOR VIEWER INFORMATION AND USE FOR ONLY THE APPLICATION TO THIS PROJECT. DUE TO THE POTENTIAL THAT THE MAGNETIC INFORMATION MAY BE MODIFIED UNINTENTIONALLY OR OTHERWISE, ALLEN & MAJOR ASSOCIATES, INC. MAY REMOVE ALL RELIANCE ON THE ACCURACY AND COMPLETENESS OF MAGNETIC MEDIA. PRINTED REPRESENTATIONS OF THE DRAWINGS AND SPECIFICATIONS ISSUED SHALL BE THE ONLY RECORD COPIES OF ALLEN & MAJOR ASSOCIATES, INC.'S WORK PRODUCT.

Copyright 2015 Allen & Major Associates, Inc. All Rights Reserved.

DRAWING TITLE:

SEWER MAIN & DRAINAGE IMPROVEMENTS PLAN & PROFILE MAIN STREET

All dimensions, levels, layouts and field conditions shall be verified at the site by the contractor before proceeding with the work.

MRID Project No.	58012MASS
Consultant Project No.	1839-02D
Date:	08/14/2015

Drawn By	Checked By	Approved By
KEA	TJW	TJW

File Name: C1839-02D

S-1

NOTE: THE FOLLOWING APPROXIMATE MAIN STREET SEWER MAIN ACTIVE TAP BREAK-IN LOCATIONS ARE TAKEN FROM "MGM CASINO SEWER LINE ASSESSMENT (STATE, MAIN & UNION STREET) REPORT", BY INLAND WATERS, INC., DATED AUGUST 2015.

STA 101+45.00 EXIST. SMH	STA 105+32.31 RIGHT	STA 109+32.88 LEFT
STA 101+63.40 RIGHT	STA 105+43.31 RIGHT	STA 109+61.68 RIGHT
STA 102+38.90 RIGHT	STA 105+48.11 RIGHT	STA 109+90.48 LEFT
STA 102+53.40 RIGHT	STA 105+77.81 RIGHT	STA 110+22.88 RIGHT
STA 103+02.70 RIGHT	STA 106+32.11 LEFT	STA 110+66.38 LEFT
STA 103+26.70 LEFT	STA 106+74.61 RIGHT	STA 110+78.48 RIGHT
STA 103+55.10 RIGHT	STA 107+15.17 EXIST. SMH	STA 111.24+31 EXIST. SMH
STA 103+84.30 RIGHT	STA 107+18.78 RIGHT	
STA 103+87.41 EXIST. SMH	STA 107+38.78 LEFT	
STA 104+27.91 LEFT	STA 107+68.98 RIGHT	
STA 104+30.91 RIGHT	STA 108+76.98 RIGHT	
STA 104+55.41 LEFT	STA 108+86.28 LEFT	
STA 105+00.31 LEFT	STA 109+15.18 RIGHT	
STA 105+16.11 RIGHT	STA 109+25.78 EXIST. SMH	

NOTES:
1. REFERENCE PLANS: EX-1, EX-2, C-2A, C-2B, C-3A, C-3B, C-3C, & C-3D.
2. IF A CONFLICT IS FOUND BETWEEN THE PLAN/PROFILE SHEETS AND THE REFERENCE SHEETS, INFORMATION SHOWN ON THE REFERENCE SHEETS SHALL GOVERN.
3. EXISTING STRUCTURES AND PIPES NOTED IN PROFILE VIEW AS TO BE ELIMINATED SHALL BE EITHER REMOVED IN ENTIRETY AND APPROPRIATELY BACKFILLED OR FILLED WITH FLOW FILL, AT THE CONTRACTOR'S DISCRETION.
4. CONTRACTOR TO VERIFY UTILITY SERVICES TO BE ABANDONED. ALL UTILITY SERVICE LATERALS TO BE ABANDONED SHALL BE COMPLETELY REMOVED FROM THE CITY RIGHT-OF-WAY.
5. DESIGN PLANS MAY NOT SHOW ALL ACTIVE CONNECTIONS TO THE SEWER SYSTEM. IF ACTIVE EXISTING SEWER SERVICES NOT DOCUMENTED ON THE PLANS ARE FOUND IN THE FIELD, CONTRACTOR CAN INFORM THE SWSC AND RECORD ENGINEER.

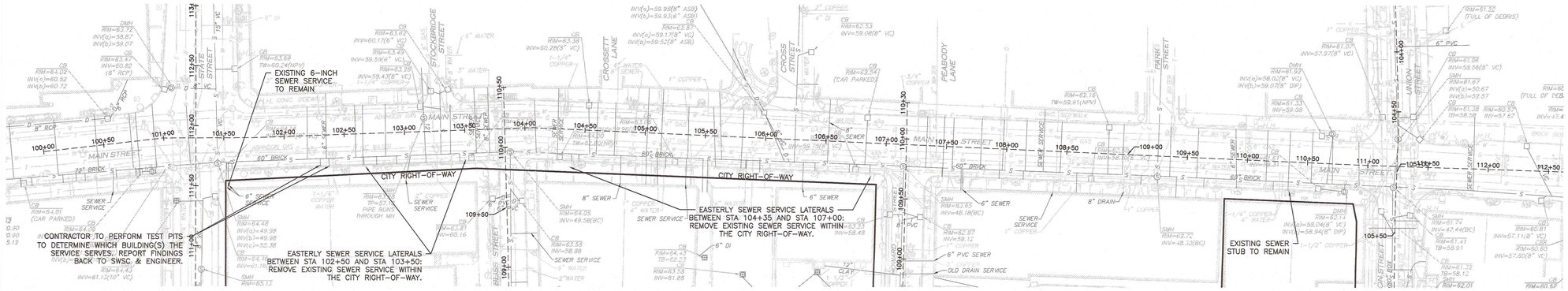

MAIN STREET CENTERLINE PROFILE

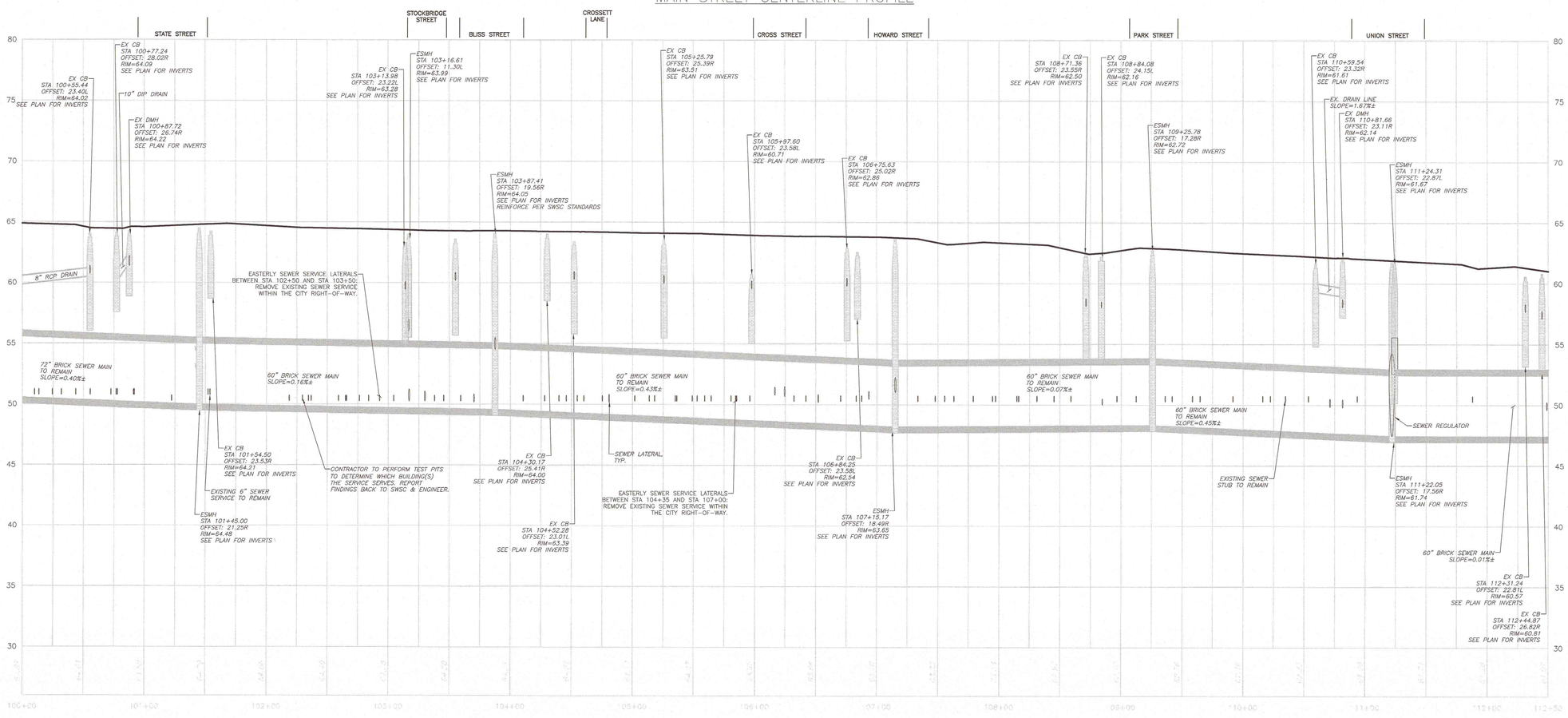

DIG SAFE

BEFORE YOU DIG CALL 811 OR 1-888-DIG-SAFE 1-888-344-7233

HORIZONTAL SCALE: 1" = 40'
VERTICAL SCALE: 1" = 4'

N:\PROJECTS\1839-02\CIVIL\DRAWINGS\CURRENT\C-1839-02 - PROFILES - SEWER DRAIN CONNECTIONS.DWG

ENGINEER:
ALLEN & MAJOR ASSOCIATES, INC.
CIVIL & STRUCTURAL ENGINEERING • LAND SURVEYING
WWW.ALLENMAJOR.COM
100 COMMERCE WAY
WOBURN, MASSACHUSETTS 01801
TEL: (781) 935-6339
FAX: (781) 935-2896
WOBURN, MA • PORTLAND, ME • MANCHESTER, NH

SEAL:

REGISTERED PROFESSIONAL ENGINEER
TIMOTHY J. WILLIAMS
CIVIL
No. 43119
REGISTERED PROFESSIONAL ENGINEER

CONSULTANT:

OWNER:
MGM RESORTS INTERNATIONAL
3260 Industrial Road, Las Vegas,NV 89109
702.692.9622 Phone 702.862.1750 Fax

PROJECT:
MGM SPRINGFIELD
SPRINGFIELD, MA
SITE/CIVIL RECORD

REVISIONS:

NO.	DATE	ISSUE
1	10/23/15	SITE PLAN APPROVAL

THIS DRAWING HAS BEEN PREPARED IN ELECTRONIC FORMAT. ALLEN & MAJOR ASSOCIATES, INC. MAKES NO WARRANTY AS TO PROVIDED COPIES OF DRAWINGS AND SPECIFICATIONS ON MAGNETIC MEDIA FOR HIS/HER INFORMATION AND USE FOR SPECIFIC APPLICATION TO THIS PROJECT. DUE TO THE POTENTIAL THAT THE MAGNETIC INFORMATION MAY BE MODIFIED UNINTENTIONALLY OR INTENTIONALLY, ALL INFORMATION SHALL BE VERIFIED BY THE USER. INDICATION OF THE DOCUMENT'S AUTHORSHIP ON THE MAGNETIC MEDIA, PRINTED REPRESENTATIONS OF THE DRAWINGS AND SPECIFICATIONS ISSUED SHALL BE THE ONLY RECORD COPIES OF ALLEN & MAJOR ASSOCIATES, INC'S WORK PRODUCT.

Copyright 2015 Allen & Major Associates, Inc.
All Rights Reserved

DRAWING TITLE:

SEWER MAIN & DRAINAGE CONNECTIONS PLAN & PROFILE MAIN STREET

All dimensions, levels, layouts and field conditions shall be verified at the site by the contractor before proceeding with the work.

MRID Project No.	58012MASS
Consultant Project No.	1839-02D
Date:	08/14/2015

Drawn By	Checked By	Approved By
KEA	TJW	TJW

File Name: C1839-02D

S-2

NOTE: THE FOLLOWING APPROXIMATE STATE STREET SEWER MAIN ACTIVE TAP BREAK–IN LOCATIONS ARE TAKEN FROM "MGM CASINO SEWER LINE ASSESSMENT (STATE, MAIN & UNION STREET) REPORT", BY INLAND WATERS, INC., DATED AUGUST 2015.

STA 104+79.15 EXIST. SMH	STA 106+06.08 LEFT
STA 105+11.98 RIGHT	STA 106+19.18 LEFT
STA 105+35.48 LEFT	STA 106+24.08 RIGHT
STA 105+45.58 LEFT	STA 106+31.88 RIGHT
STA 105+46.48 RIGHT	STA 106+47.88 LEFT
STA 105+47.08 RIGHT	STA 106+61.28 RIGHT
STA 105+62.38 RIGHT	STA 107+24.28 EXIST. SMH (BURIED)
STA 105+69.88 LEFT	STA 107+39.28 RIGHT
STA 105+81.08 RIGHT	STA 107+66.88 RIGHT
STA 105+83.28 RIGHT	STA 107+86.28 EXIST. SMH

NOTES:
1. REFERENCE PLANS: EX–1, EX–2, C–2A, C–2B, C–3A, C–3B, C–3C, & C–3D.
2. IF A CONFLICT IS FOUND BETWEEN THE PLAN/PROFILE SHEETS AND THE REFERENCE SHEETS, INFORMATION SHOWN ON THE REFERENCE SHEETS SHALL GOVERN.
3. EXISTING STRUCTURES AND PIPES NOTED IN PROFILE VIEW AS TO BE ELIMINATED SHALL BE EITHER REMOVED IN ENTIRETY AND APPROPRIATELY BACKFILLED OR FILLED WITH FLOW FILL, AT THE CONTRACTOR'S DISCRETION.
4. CONTRACTOR TO VERIFY UTILITY SERVICES TO BE ABANDONED. ALL UTILITY SERVICE LATERALS TO BE ABANDONED SHALL BE COMPLETELY REMOVED FROM THE CITY RIGHT–OF–WAY.
5. DESIGN PLANS MAY NOT SHOW ALL ACTIVE CONNECTIONS TO THE SEWER SYSTEM. IF ACTIVE EXISTING SEWER SERVICES NOT DOCUMENTED ON THE PLANS ARE FOUND IN THE FIELD, CONTRACTOR CAN INFORM THE SWSC AND RECORD ENGINEER.

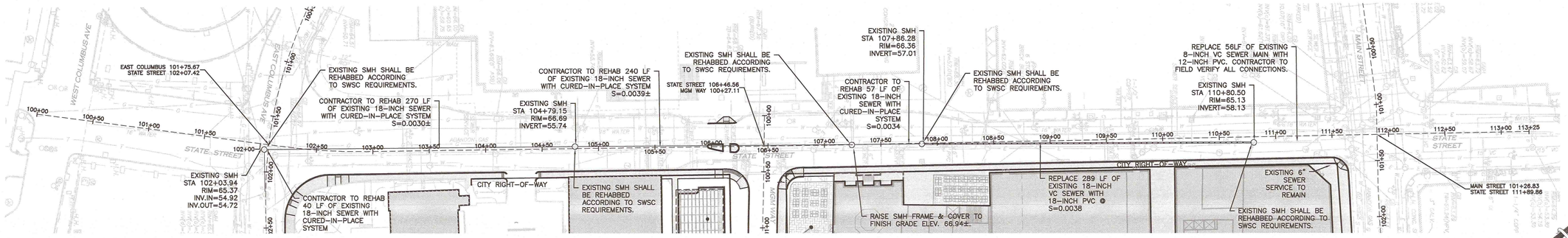

STATE STREET CENTERLINE PROFILE

DIG SAFE

BEFORE YOU DIG CALL 811 OR 1–888–DIG–SAFE 1–888–344–7233

HORIZONTAL SCALE: 1" = 40'
VERTICAL SCALE: 1" = 4'

N:\PROJECTS\1839–02\CIVIL\DRAWINGS\CURRENT\C–1839–02 – PROFILES – SEWER DRAIN IMPROVEMENTS.DWG

ENGINEER:

ALLEN & MAJOR ASSOCIATES, INC.
civil & structural engineering land surveying
100 COMMERCE WAY, SUITE 5
WOBURN, MA 01801
TEL: (781) 935-6911
FAX: (781) 935-2896
WOBURN, MA • PEABODY, MA • MANCHESTER, NH

SEAL:

COMMONWEALTH OF MASSACHUSETTS TIMOTHY J. WILLIAMS CIVIL No.43119 REGISTERED PROFESSIONAL ENGINEER 10/23/15

CONSULTANT:

OWNER:

MGM RESORTS INTERNATIONAL
3260 Industrial Road, Las Vegas,NV 89109
702.692.9622 Phone 702.862.1750 Fax

SPRINGFIELD
SPRINGFIELD, MA

PROJECT: MGM SPRINGFIELD - SITE/CIVIL RECORD

REVISIONS:

NO.	DATE	ISSUE
1	10/23/15	SITE PLAN APPROVAL

THIS DRAWING HAS BEEN PREPARED IN ELECTRONIC FORMAT. SUBSEQUENTLY THE INFORMATIVE OR CONTRACTUALLY BE MODIFIED BY THE TRANSFER OF INFORMATION IN DIGITAL OR MAGNETIC MEDIA FOR REVIEW INFORMATION AND USE FOR SPECIFIC APPLICATION TO THIS PROJECT, DUE TO THE POTENTIAL THAT THE MAGNETIC INFORMATION MAY BE MODIFIED UNINTENTIONALLY OR WITHOUT THE KNOWLEDGE OF THE RECIPIENT, THE ABSENCE OF INDICATION OF THE DOCUMENTS AUTHORSHIP ON THE MAGNETIC MEDIA, PRINTED REPRESENTATIONS OF THE DRAWINGS AND SPECIFICATIONS SIGNED SHALL BE THE ONLY RECORD COPIES OF ALLEN & MAJOR ASSOCIATES, INC'S WORK PRODUCT.

Copyright 2015 Allen & Major Associates, Inc.
All Rights Reserved

DRAWING TITLE:

SEWER MAIN & DRAINAGE IMPROVEMENTS PLAN & PROFILE STATE STREET

All dimensions, levels, layouts and field conditions shall be verified at the site by the contractor before proceeding with the work.

MRID Project No.	58012MASS
Consultant Project No.	1839-02D
Date:	08/14/2015

Drawn By	Checked By	Approved By
KEA	TJW	TJW

File Name: C1839-02D

S-3

NOTE: THE FOLLOWING APPROXIMATE STATE STREET SEWER MAIN ACTIVE TAP BREAK-IN LOCATIONS ARE TAKEN FROM "MGM CASINO SEWER LINE ASSESSMENT (STATE, MAIN & UNION STREET) REPORT", BY INLAND WATERS, INC., DATED AUGUST 2015.

STA 104+79.15 EXIST. SMH
STA 105+11.98 RIGHT
STA 105+35.48 LEFT
STA 105+45.58 LEFT
STA 105+46.48 RIGHT
STA 105+47.08 RIGHT
STA 105+62.38 RIGHT
STA 105+69.88 LEFT
STA 105+81.08 RIGHT
STA 105+83.28 RIGHT
STA 106+06.08 LEFT
STA 106+19.18 LEFT
STA 106+24.08 RIGHT
STA 106+31.88 RIGHT
STA 106+47.88 LEFT
STA 106+61.28 RIGHT
STA 107+24.28 EXIST. SMH (BURIED)
STA 107+39.28 RIGHT
STA 107+66.88 RIGHT
STA 107+86.28 EXIST. SMH

NOTES:
1. REFERENCE PLANS: EX-1, EX-2, C-2A, C-2B, C-3A, C-3B, C-3C, & C-3D.
2. IF A CONFLICT IS FOUND BETWEEN THE PLAN/PROFILE SHEETS AND THE REFERENCE SHEETS, INFORMATION SHOWN ON THE REFERENCE SHEETS SHALL GOVERN.
3. EXISTING STRUCTURES AND PIPES NOTED IN PROFILE VIEW AS TO BE ELIMINATED SHALL BE EITHER REMOVED IN ENTIRETY AND APPROPRIATELY BACKFILLED OR FILLED WITH FLOW FILL, AT THE CONTRACTOR'S DISCRETION.
4. CONTRACTOR TO VERIFY UTILITY SERVICES TO BE ABANDONED. ALL UTILITY SERVICE LATERALS TO BE ABANDONED SHALL BE COMPLETELY REMOVED FROM THE CITY RIGHT-OF-WAY.
5. DESIGN PLANS MAY NOT SHOW ALL ACTIVE CONNECTIONS TO THE SEWER SYSTEM. IF ACTIVE EXISTING SEWER SERVICES NOT DOCUMENTED ON THE PLANS ARE FOUND IN THE FIELD, CONTRACTOR CAN INFORM THE SWSC AND RECORD ENGINEER.

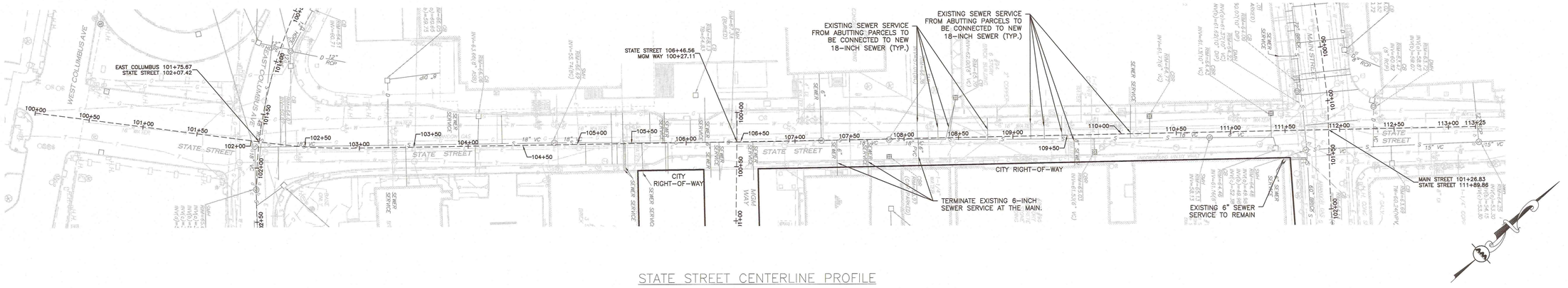

STATE STREET CENTERLINE PROFILE

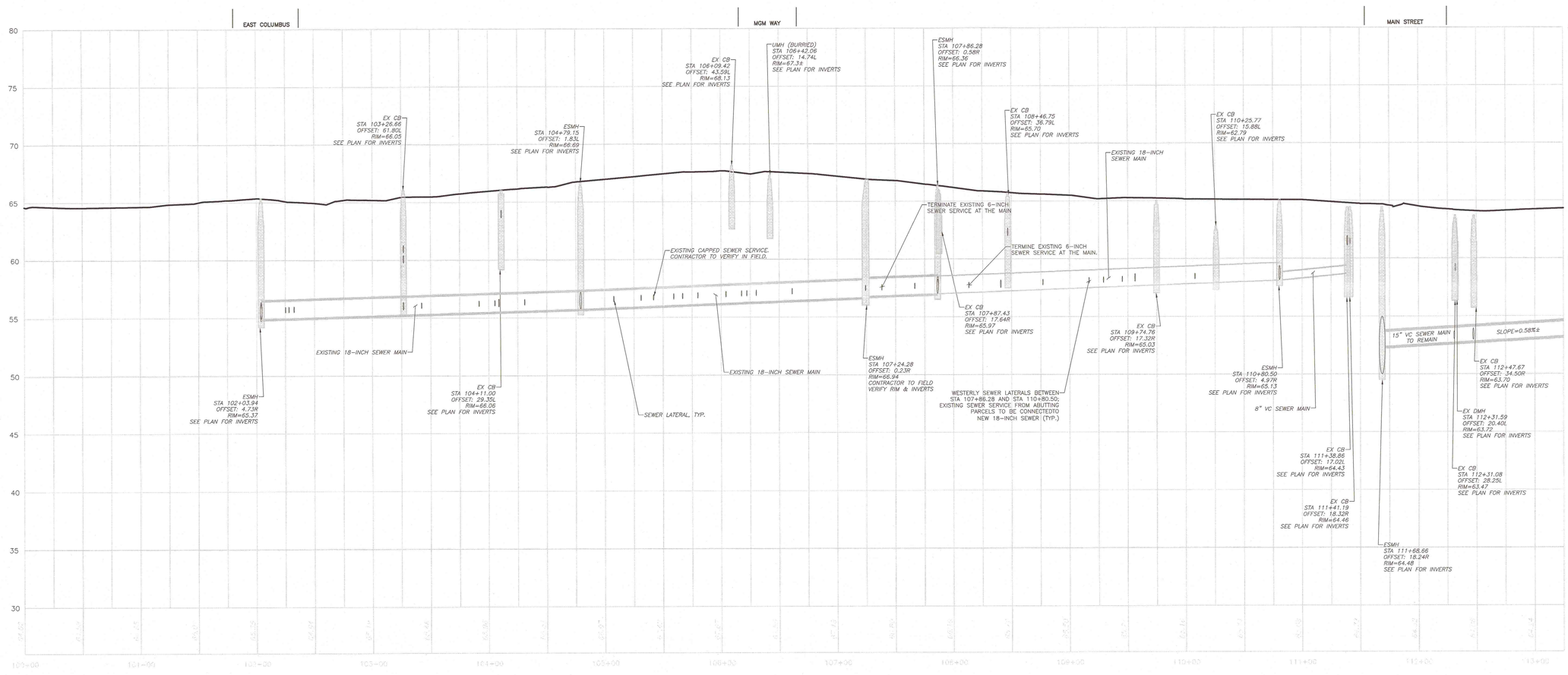

DIG SAFE
BEFORE YOU DIG CALL 811 OR 1-888-DIG-SAFE 1-888-344-7233

HORIZONTAL SCALE: 1" = 40'
VERTICAL SCALE: 1" = 4'

N:\PROJECTS\1839-02\CIVIL\DRAWINGS\CURRENT\C-1839-02 - PROFILES - SEWER DRAIN CONNECTIONS.DWG

ENGINEER :

ALLEN & MAJOR ASSOCIATES, INC.
civil engineering • surveying • planning
environmental consulting • landscape architecture
100 COMMERCE WAY
WOBURN, MA 01801
TEL: (781) 935-6468
FAX: (781) 935-8832
WOBURN, MA • WORCESTER, MA • MANCHESTER, NH

SEAL:

COMMONWEALTH OF MASSACHUSETTS
TIMOTHY J. WILLIAMS
CIVIL
No. 43119
REGISTERED PROFESSIONAL ENGINEER
10/23/15

CONSULTANT:

OWNER :

MGM RESORTS INTERNATIONAL
3260 Industrial Road, Las Vegas,NV 89109
702.692.9622 Phone 702.862.1750 Fax

MGM SPRINGFIELD

PROJECT:
MGM SPRINGFIELD - SITE/CIVIL RECORD
SPRINGFIELD, MA

REVISIONS :

NO.	DATE	ISSUE
1	10/23/15	SITE PLAN APPROVAL

THIS DRAWING HAS BEEN PREPARED IN ELECTRONIC FORMAT. ALLEN & MAJOR ASSOCIATES, INC. MAKES AVAILABLE TO OTHERS PAPER COPIES OF DRAWINGS AND SPECIFICATIONS OR MAGNETIC MEDIA FOR HIS/HER INFORMATION AND USE FOR SPECIFIC APPLICATION TO THIS PROJECT. DUE TO THE POTENTIAL THAT THE MAGNETIC INFORMATION MAY BE MODIFIED UNINTENTIONALLY OR TRANSLATED TO OTHER FORMATS, ONLY PAPER COPIES WITH THE INDICATION OF THE DOCUMENT'S AUTHORSHIP ON THIS MAGNETIC MEDIA, PRINTED REPRESENTATIONS OF THE DRAWINGS AND SPECIFICATIONS SEALED SHALL BE THE ONLY RECORD COPIES OF ALLEN & MAJOR ASSOCIATES, INC.'S WORK PRODUCT.

Copyright 2015 Allen & Major Associates, Inc.
All Rights Reserved

DRAWING TITLE :

SEWER MAIN & DRAINAGE CONNECTIONS PLAN & PROFILE STATE STREET

All dimensions, levels, layouts and field conditions shall be verified at the site by the contractor before proceeding with the work.

MRID Project No.	58012MASS
Consultant Project No.	1839-02D
Date:	08/14/2015

Drawn By	Checked By	Approved By
KEA	TJW	TJW

File Name: C1839-02D

S-4

NOTES:
1. REFERENCE PLANS: EX-1, EX-2, C-2A, C-2B, C-3A, C-3B, C-3C, & C-3D.
2. IF A CONFLICT IS FOUND BETWEEN THE PLAN/PROFILE SHEETS AND THE REFERENCE SHEETS, INFORMATION SHOWN ON THE REFERENCE SHEETS SHALL GOVERN.
3. EXISTING STRUCTURES AND PIPES NOTED IN PROFILE VIEW AS TO BE ELIMINATED SHALL BE EITHER REMOVED IN ENTIRETY AND APPROPRIATELY BACKFILLED OR FILLED WITH FLOW FILL, AT THE CONTRACTOR'S DISCRETION.
4. CONTRACTOR TO VERIFY UTILITY SERVICES TO BE ABANDONED. ALL UTILITY SERVICE LATERALS TO BE ABANDONED SHALL BE COMPLETELY REMOVED FROM THE CITY RIGHT-OF-WAY.
5. DESIGN PLANS MAY NOT SHOW ALL ACTIVE CONNECTIONS TO THE SEWER SYSTEM. IF ACTIVE EXISTING SEWER SERVICES NOT DOCUMENTED ON THE PLANS ARE FOUND IN THE FIELD, CONTRACTOR CAN INFORM THE SWSC AND RECORD ENGINEER.

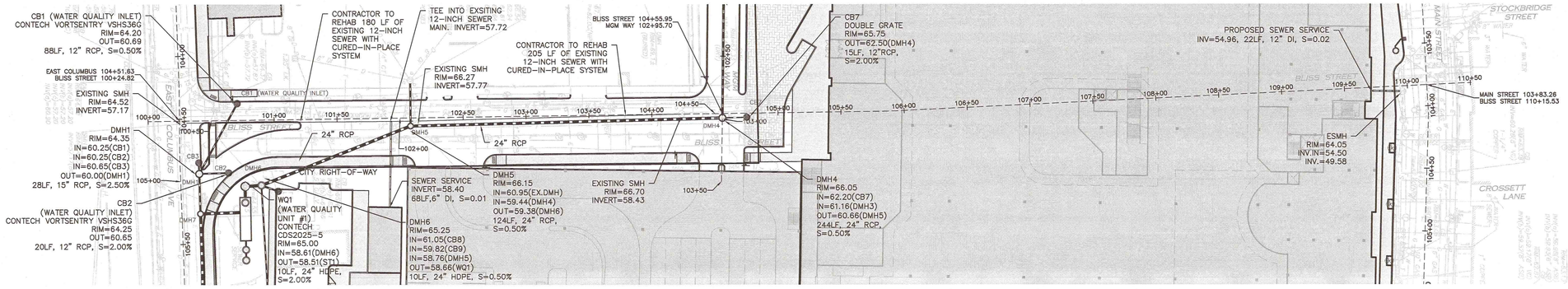

BLISS STREET CENTERLINE PROFILE

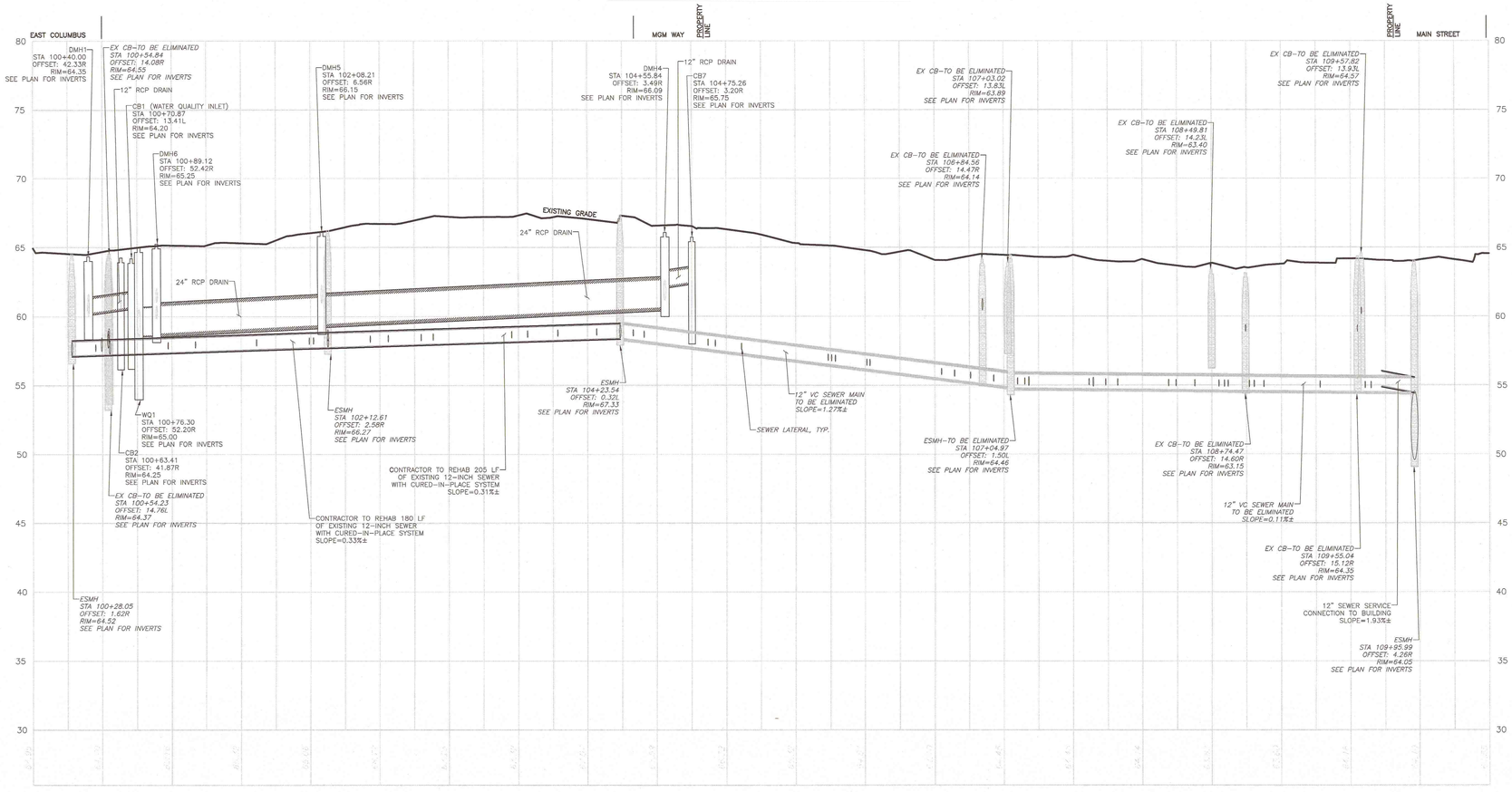

DIG SAFE

BEFORE YOU DIG CALL 811 OR 1-888-DIG-SAFE 1-888-344-7233

HORIZONTAL SCALE: 1" = 40'
VERTICAL SCALE: 1" = 4'

N:\PROJECTS\1839-02\CIVIL\DRAWINGS\CURRENT\C-1839-02 - PROFILES - SEWER DRAIN IMPROVEMENTS.DWG

ENGINEER:

ALLEN & MAJOR ASSOCIATES, INC.
civil engineers • land surveyors • planners
environmental consultants • landscape architecture
100 COMMERCE WAY - 5 -
WOBURN, MA 01801-1087
TEL: (781) 935-6468
FAX: (781) 935-8966
WOBURN, MA • PORTLAND, ME • MANCHESTER, NH

SEAL:

COMMONWEALTH OF MASSACHUSETTS
TIMOTHY J. WILLIAMS
CIVIL
No. 43119
REGISTERED PROFESSIONAL ENGINEER
10/23/15

CONSULTANT:

OWNER:

MGM RESORTS INTERNATIONAL
3260 Industrial Road, Las Vegas,NV 89109
702.692.9622 Phone 702.862.1750 Fax

PROJECT: MGM SPRINGFIELD - SITE/CIVIL RECORD
MGM SPRINGFIELD
SPRINGFIELD, MA

REVISIONS:

NO.	DATE	ISSUE
1	10/23/15	SITE PLAN APPROVAL

THIS DRAWING HAS BEEN PREPARED IN ELECTRONIC FORMAT. CLIENT/CLIENT'S REPRESENTATIVE OR CONSULTANT MAY BE PROVIDED COPIES OF DRAWINGS AND SPECIFICATIONS ON MAGNETIC MEDIA FOR INFORMATIONAL PURPOSES ONLY. DUE TO APPLICATIONS TO THIS PROJECT, DUE TO THE POTENTIAL THAT THE MAGNETIC INFORMATION MAY BE MODIFIED UNINTENTIONALLY OR OTHERWISE, ALLEN & MAJOR ASSOCIATES, INC. MAY REMOVE ALL INDICATION OF THE DOCUMENTS AUTHORSHIP ON THE MAGNETIC MEDIA. THEREFORE, ONLY HARD COPY DRAWINGS AND SPECIFICATIONS SEALED SHALL BE THE ONLY RECORD COPIS OF ALLEN & MAJOR ASSOCIATES, INC'S WORK PRODUCT.

Copyright 2015 Allen & Major Associates, Inc. All Rights Reserved

DRAWING TITLE:

SEWER MAIN & DRAINAGE IMPROVEMENTS PLAN & PROFILE BLISS STREET

All dimensions, levels, layouts and field conditions shall be verified at the site by the contractor before proceeding with the work.

MRID Project No.	58012MASS
Consultant Project No.	1839-02D
Date:	08/14/2015

Drawn By	Checked By	Approved By
KEA	TJW	TJW

File Name: C1839-02D

S-5

NOTES:
1. REFERENCE PLANS: EX-1, EX-2, C-2A, C-2B, C-3A, C-3B, C-3C, & C-3D.
2. IF A CONFLICT IS FOUND BETWEEN THE PLAN/PROFILE SHEETS AND THE REFERENCE SHEETS, INFORMATION SHOWN ON THE REFERENCE SHEETS SHALL GOVERN.
3. EXISTING STRUCTURES AND PIPES NOTED IN PROFILE VIEW AS TO BE ELIMINATED SHALL BE EITHER REMOVED IN ENTIRETY AND APPROPRIATELY BACKFILLED OR FILLED WITH FLOW FILL, AT THE CONTRACTOR'S DISCRETION.
4. CONTRACTOR TO VERIFY UTILITY SERVICES TO BE ABANDONED. ALL UTILITY SERVICE LATERALS TO BE ABANDONED SHALL BE COMPLETELY REMOVED FROM THE CITY RIGHT-OF-WAY.
5. DESIGN PLANS MAY NOT SHOW ALL ACTIVE CONNECTIONS TO THE SEWER SYSTEM. IF ACTIVE EXISTING SEWER SERVICES NOT DOCUMENTED ON THE PLANS ARE FOUND IN THE FIELD

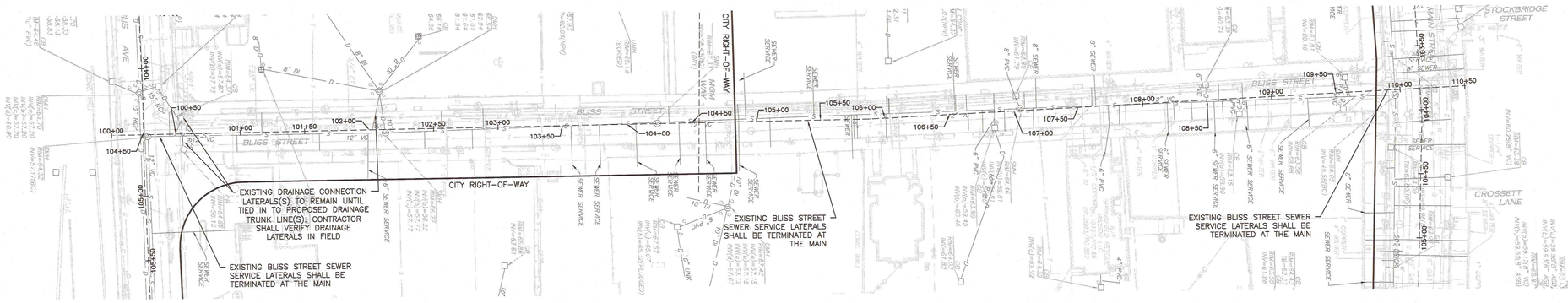

BLISS STREET CENTERLINE PROFILE

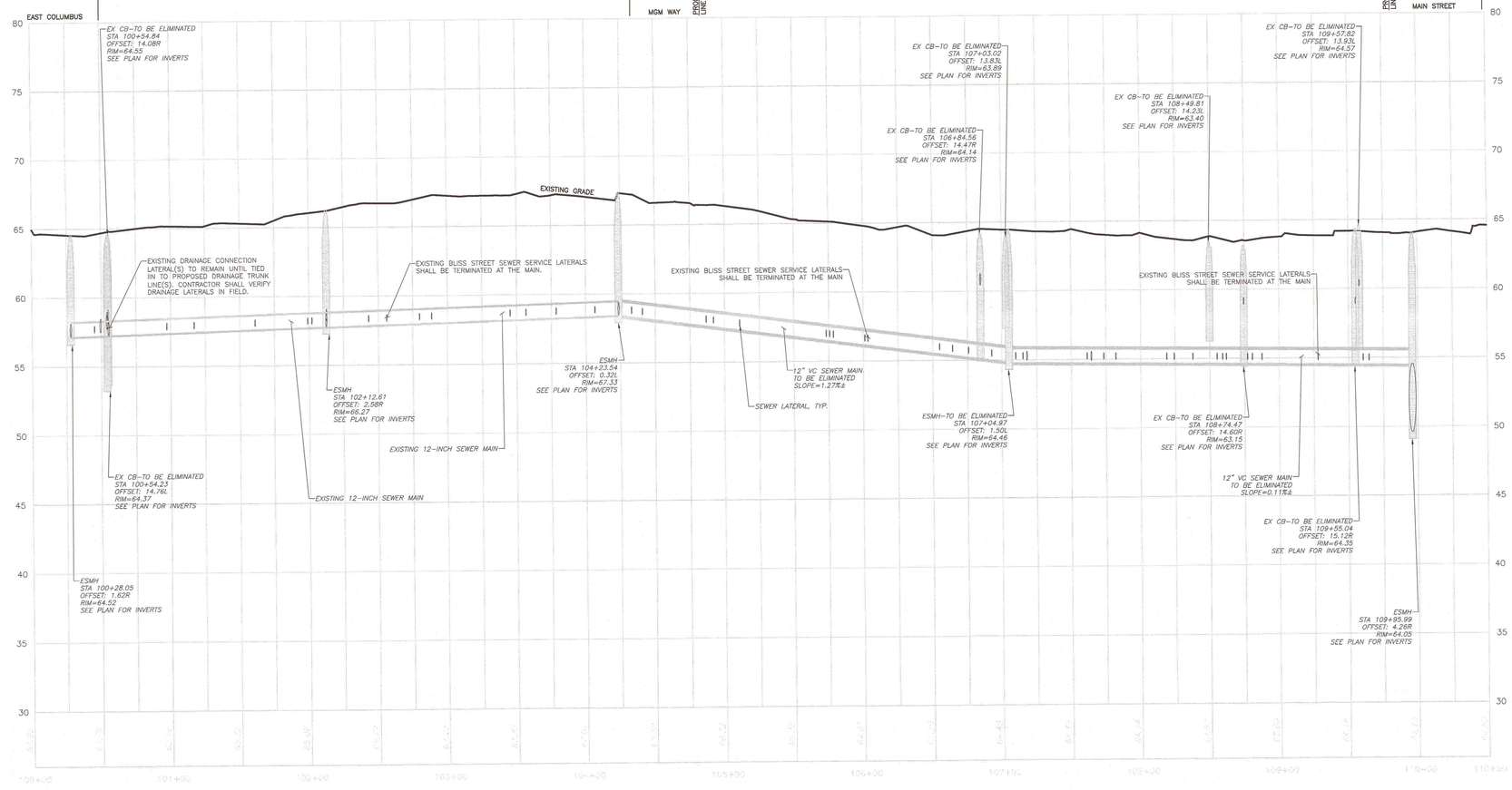

DIG SAFE

BEFORE YOU DIG CALL 811 OR 1-888-DIG-SAFE 1-888-344-7233

HORIZONTAL SCALE: 1" = 40'
VERTICAL SCALE: 1" = 4'

N:\PROJECTS\1839-02\CIVIL\DRAWINGS\CURRENT\C-1839-02 - PROFILES - SEWER DRAIN CONNECTIONS.DWG

ENGINEER:

ALLEN & MAJOR ASSOCIATES, INC.
civil & structural engineering • land surveying
environmental permitting • water resources
www.allenmajor.com
100 COMMERCE WAY
WOBURN, MA 01801
TEL: (781) 935-6889
FAX: (781) 935-2896
WOBURN, MA • EASTLYME, NH • MANCHESTER, NH

SEAL:

CONSULTANT:

OWNER:

MGM RESORTS INTERNATIONAL
3260 Industrial Road, Las Vegas,NV 89109
702.692.9622 Phone 702.862.1750 Fax

MGM SPRINGFIELD
SPRINGFIELD, MA

PROJECT: MGM SPRINGFIELD - SITE/CIVIL RECORD

REVISIONS:

NO.	DATE	ISSUE
1	10/23/15	SITE PLAN APPROVAL

THIS DRAWING HAS BEEN PREPARED IN ELECTRONIC FORMAT. CLIENT/CLIENT'S REPRESENTATIVE OR CONSULTANT MAY BE PROVIDED COPIES OF DRAWINGS AND SPECIFICATIONS ON MAGNETIC MEDIA FOR HELPER INFORMATION AND USE FOR SPECIFIC APPLICATION TO THIS PROJECT. DUE TO THE POTENTIAL THAT THE INFORMATION CONTAINED ON MAGNETIC MEDIA MAY BE ALTERED OR DAMAGED, ALLEN & MAJOR ASSOCIATES, INC. MAY REMOVE ALL INDICATION OF THE DOCUMENT'S AUTHORSHIP ON THE MAGNETIC MEDIA. PRINTED REPRODUCTIONS OF THE DRAWINGS AND SPECIFICATIONS ISSUED SHALL BE THE ONLY RECORD COPIES OF ALLEN & MAJOR ASSOCIATES, INC.'S WORK PRODUCT.

Copyright 2015 Allen & Major Associates, Inc.
All Rights Reserved

DRAWING TITLE:

SEWER MAIN & DRAINAGE CONNECTIONS PLAN & PROFILE BLISS STREET

All dimensions, levels, layouts and field conditions shall be verified at the site by the contractor before proceeding with the work.

MRID Project No.	58012MASS
Consultant Project No.	1839-02D
Date:	08/14/2015

Drawn By	Checked By	Approved By
KEA	TJW	TJW

File Name: C1839-02D

S-6

NOTES:
1. REFERENCE PLANS: EX-1, EX-2, C-2A, C-2B, C-3A, C-3B, C-3C, & C-3D.
2. IF A CONFLICT IS FOUND BETWEEN THE PLAN/PROFILE SHEETS AND THE REFERENCE SHEETS, INFORMATION SHOWN ON THE REFERENCE SHEETS SHALL GOVERN.
3. EXISTING STRUCTURES AND PIPES NOTED IN PROFILE VIEW AS TO BE ELIMINATED SHALL BE EITHER REMOVED IN ENTIRETY AND APPROPRIATELY BACKFILLED OR FILLED WITH FLOW FILL, AT THE CONTRACTOR'S DISCRETION.
4. CONTRACTOR TO VERIFY UTILITY SERVICES TO BE ABANDONED. ALL UTILITY SERVICE LATERALS TO BE ABANDONED SHALL BE COMPLETELY REMOVED FROM THE CITY RIGHT-OF-WAY.
5. DESIGN PLANS MAY NOT SHOW ALL ACTIVE CONNECTIONS TO THE SEWER SYSTEM. IF ACTIVE EXISTING SEWER SERVICES NOT DOCUMENTED ON THE PLANS ARE FOUND IN THE FIELD, CONTRACTOR CAN INFORM THE SWSC AND RECORD ENGINEER.

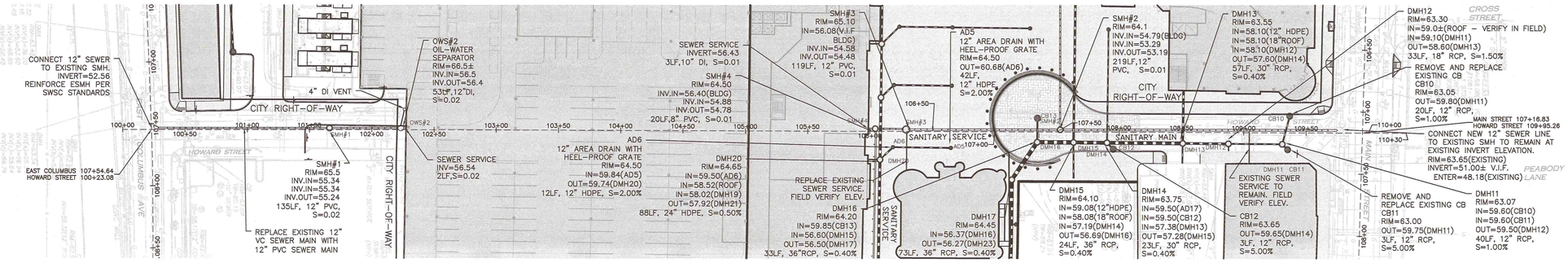

HOWARD STREET CENTERLINE PROFILE

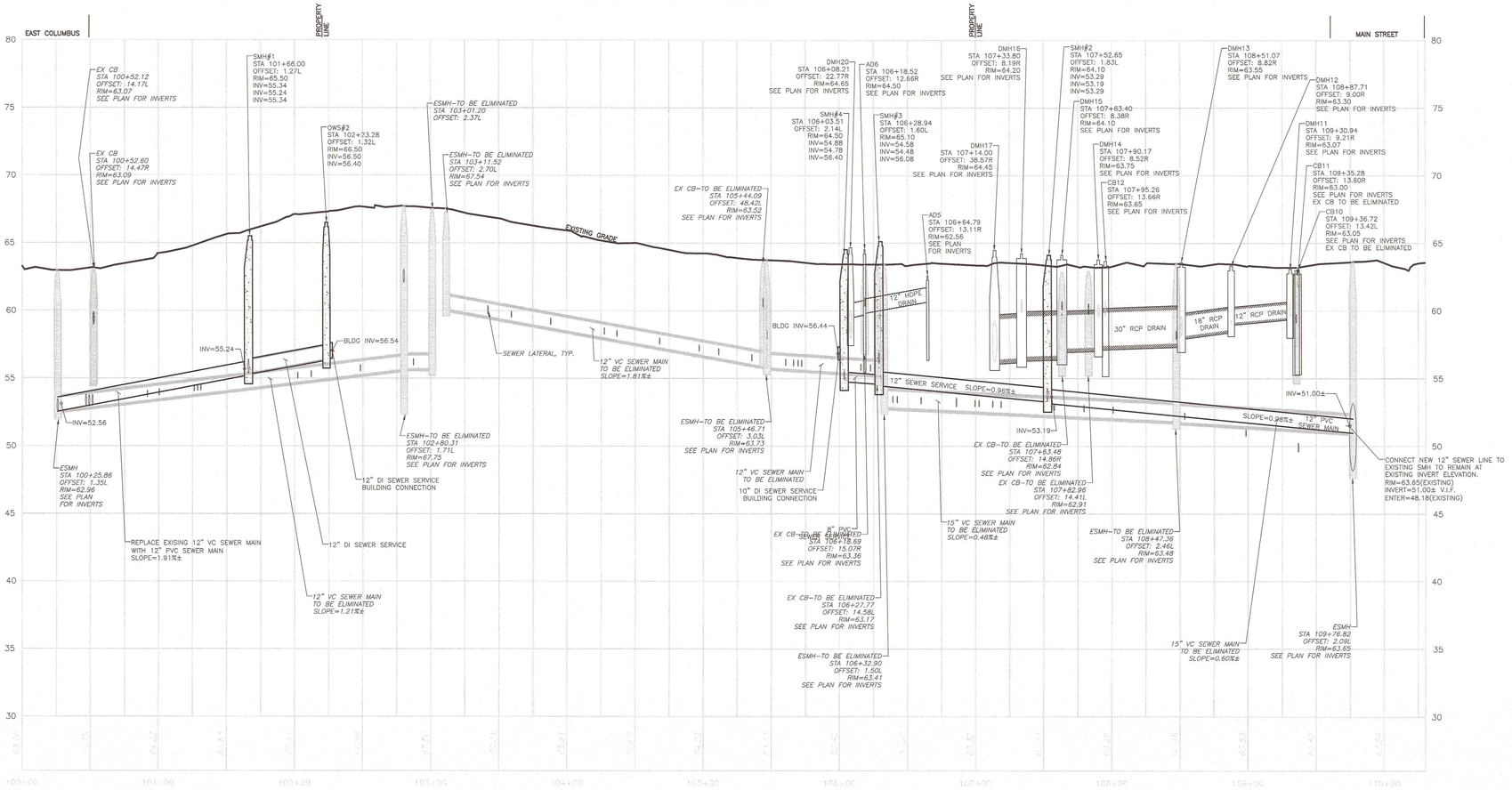

DIG SAFE
BEFORE YOU DIG CALL 811 OR 1-888-DIG-SAFE 1-888-344-7233

HORIZONTAL SCALE: 1" = 40'
VERTICAL SCALE: 1" = 4'

N:\PROJECTS\1839-02\CIVIL\DRAWINGS\CURRENT\C-1839-02 – PROFILES – SEWER DRAIN IMPROVEMENTS.DWG

ENGINEER:
ALLEN & MAJOR ASSOCIATES, INC.
civil & structural engineering • land surveying
100 East Penn Street, Suite 1100
Long Beach, CA 90805
(562) 432-3700
WORTHINGTON, OHIO 43085-6585
(614) 540-6633
FAX: (562) 432-3800
WORTHINGTON, OH • LAKEVILLE, MN • MANCHESTER, NH

SEAL:
COMMONWEALTH OF MASSACHUSETTS TIMOTHY J. WILLIAMS CIVIL No. 43119 REGISTERED PROFESSIONAL ENGINEER 10/23/15

CONSULTANT:

OWNER:
MGM RESORTS INTERNATIONAL
3280 Industrial Road, Las Vegas, NV 89109
702.692.9622 Phone 702.862.1750 Fax

PROJECT: MGM SPRINGFIELD - SITE/CIVIL RECORD
MGM SPRINGFIELD
SPRINGFIELD, MA

REVISIONS:

NO.	DATE	ISSUE
1	10/23/15	SITE PLAN APPROVAL

THIS DRAWING HAS BEEN PREPARED IN ELECTRONIC FORMAT. CLIENT/CLIENT'S REPRESENTATIVE OR CONSULTANT MAY BE PROVIDED COPIES OF DRAWINGS AND SPECIFICATIONS ON MAGNETIC MEDIA FOR CLIENT'S CONVENIENCE OF REFERENCE AND APPLICATION TO THIS PROJECT, DUE TO THE POTENTIAL THAT THE MAGNETIC INFORMATION MAY BE MODIFIED UNINTENTIONALLY OR OTHERWISE, OR FOR USE BY OTHERS ON OTHER PROJECTS AND, ACCORDINGLY, IN THE EVENT OF ANY DISCREPANCY ON THE FACE OF THE MEDIA, PRINTED REPRESENTATIONS OF THE DRAWINGS AND SPECIFICATIONS ISSUED SHALL BE THE ONLY RECORD COPIES OF ALLEN & MAJOR ASSOCIATES, INC.'S WORK PRODUCT.

Copyright 2015 Allen & Major Associates, Inc. All Rights Reserved.

DRAWING TITLE:

SEWER MAIN & DRAINAGE IMPROVEMENTS PLAN & PROFILE HOWARD STREET

All dimensions, levels, layouts and field conditions shall be verified at the site by the contractor before proceeding with the work.

MRID Project No.	58012MASS
Consultant Project No.	1839-02D
Date:	08/14/2015

Drawn By	Checked By	Approved By
KEA	TJW	TJW

File Name: C1839-02D

S-7

NOTES:

1. REFERENCE PLANS: EX-1, EX-2, C-2A, C-2B, C-3A, C-3B, C-3C, & C-3D.
2. IF A CONFLICT IS FOUND BETWEEN THE PLAN/PROFILE SHEETS AND THE REFERENCE SHEETS, INFORMATION SHOWN ON THE REFERENCE SHEETS SHALL GOVERN.
3. EXISTING STRUCTURES AND PIPES NOTED IN PROFILE VIEW AS TO BE ELIMINATED SHALL BE EITHER REMOVED IN ENTIRETY AND APPROPRIATELY BACKFILLED OR FILLED WITH FLOW FILL, AT THE CONTRACTOR'S DISCRETION.
4. CONTRACTOR TO VERIFY UTILITY SERVICES TO BE ABANDONED. ALL UTILITY SERVICE LATERALS TO BE ABANDONED SHALL BE COMPLETELY REMOVED FROM THE CITY RIGHT-OF-WAY.
5. DESIGN PLANS MAY NOT SHOW ALL ACTIVE CONNECTIONS TO THE SEWER SYSTEM. IF ACTIVE EXISTING SEWER SERVICES NOT DOCUMENTED ON THE PLANS ARE FOUND IN THE FIELD, CONTRACTOR CAN INFORM THE SWSC AND RECORD ENGINEER.

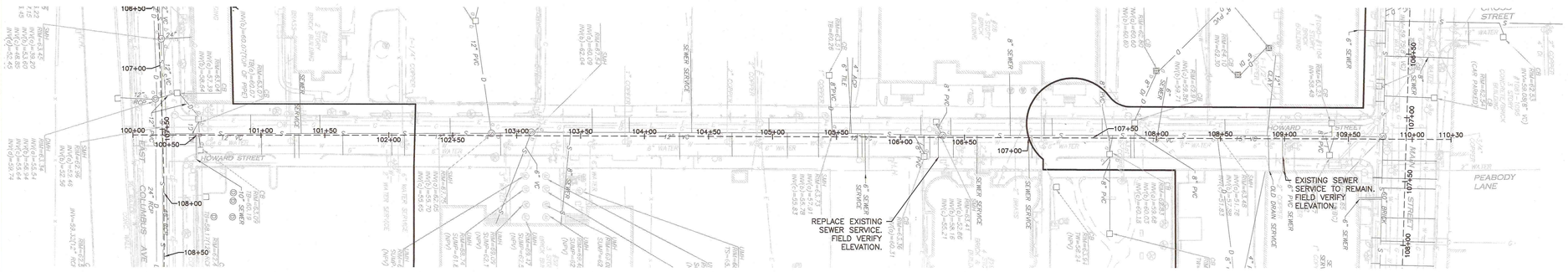

HOWARD STREET CENTERLINE PROFILE

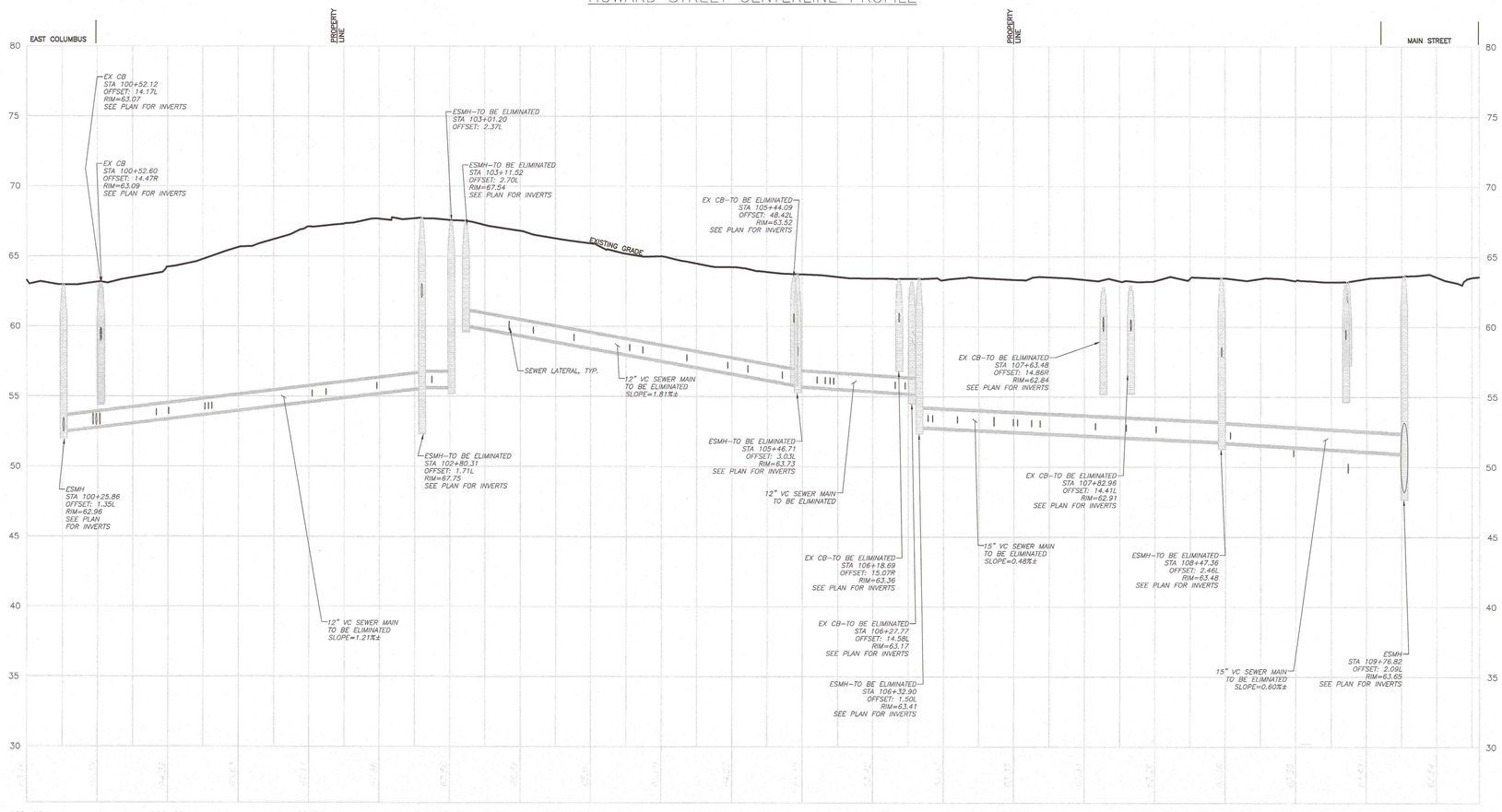

DIG SAFE

BEFORE YOU DIG CALL 811 OR 1-888-DIG-SAFE 1-888-344-7233

HORIZONTAL SCALE: 1" = 40'
VERTICAL SCALE: 1" = 4'

N:\PROJECTS\1839-02\CIVIL\DRAWINGS\CURRENT\C-1839-02 - PROFILES - SEWER DRAIN CONNECTIONS.DWG

ENGINEER :

ALLEN & MAJOR ASSOCIATES, INC.
CIVIL & structural engineering • land surveying
100 Commerce Way, Suite 5
Woburn, MA 01801
TEL: (781) 935-0889
FAX: (781) 935-2896
WOBURN, MA • PORTLAND, ME • MANCHESTER, NH

SEAL:

COMMONWEALTH OF MASSACHUSETTS
TIMOTHY J. WILLIAMS
CIVIL
No. 43119
REGISTERED PROFESSIONAL ENGINEER
10/23/15

CONSULTANT:

OWNER :

MGM RESORTS INTERNATIONAL™
3280 Industrial Road, Las Vegas,NV 89109
702.692.9622 Phone 702.862.1750 Fax

MGM SPRINGFIELD
SPRINGFIELD, MA

PROJECT:
MGM SPRINGFIELD - SITE/CIVIL RECORD

REVISIONS :

NO.	DATE	ISSUE
1	10/23/15	SITE PLAN APPROVAL

THIS DRAWING HAS BEEN PREPARED IN ELECTRONIC FORMAT. ALLEN & MAJOR ASSOCIATES, INC. MAKES NO WARRANTIES TO PROVIDED COPIES OF DRAWINGS AND SPECIFICATIONS ON MAGNETIC MEDIA FOR HIS/HER INFORMATION AND USE FOR SPECIFIC APPLICATION TO THIS PROJECT. DUE TO THE POTENTIAL THAT THE MAGNETIC INFORMATION MAY BE MODIFIED UNINTENTIONALLY OR OTHERWISE, THE USER SHALL PERFORM ACCEPTANCE TESTS OR INDICATION OF THE DOCUMENT'S AUTHENTICITY ON THIS MAGNETIC MEDIA. PRINTED REPRESENTATIONS OF THE DRAWINGS AND SPECIFICATIONS ISSUED SHALL BE THE ONLY RECORD COPIES OF ALLEN & MAJOR ASSOCIATES, INC.'S WORK PRODUCT.

Copyright 2015 Allen & Major Associates, Inc.
All Rights Reserved

DRAWING TITLE :

SEWER MAIN & DRAINAGE CONNECTIONS PLAN & PROFILE HOWARD STREET

All dimensions, levels, layouts and field conditions shall be verified at the site by the contractor before proceeding with the work.

MRID Project No.	58012MASS
Consultant Project No.	1839-02D
Date:	08/14/2015

Drawn By	Checked By	Approved By
KEA	TJW	TJW

File Name: C1839-02D

S-8

NOTE: THE FOLLOWING APPROXIMATE UNION STREET SEWER MAIN ACTIVE TAP BREAK-IN LOCATIONS ARE TAKEN FROM "MGM CASINO SEWER LINE ASSESSMENT (STATE, MAIN & UNION STREET) REPORT", BY INLAND WATERS, INC., DATED AUGUST 2015.

STA 105+13.13 EXIST. SMH
STA 105+36.92 LEFT
STA 105+45.32 RIGHT
STA 105+45.32 LEFT
STA 106+45.42 LEFT
STA 106+52.62 LEFT
STA 107+49.72 RIGHT
STA 107+61.42 RIGHT
STA 108+12.12 LEFT
STA 108+41.92 RIGHT
STA 108+54.72 RIGHT
SAT 108+74.72 EXIST. SMH
STA 109+57.72 RIGHT
STA 109+57.72 LEFT
STA 110+28.22 LEFT
STA 110+87.12 RIGHT
STA 111+42.72 EXIST. SMH
STA 112+53.91 RIGHT
STA 112+79.72 LEFT
STA 113+44.91 LEFT
STA 113+86.50 RIGHT
STA 114+24.45 EXIST. SMH

NOTES:
1. REFERENCE PLANS: EX-1, EX-2, C-2A, C-2B, C-3A, C-3B, C-3C, & C-3D.
2. IF A CONFLICT IS FOUND BETWEEN THE PLAN/PROFILE SHEETS AND THE REFERENCE SHEETS, INFORMATION SHOWN ON THE REFERENCE SHEETS SHALL GOVERN.
3. EXISTING STRUCTURES AND PIPES NOTED IN PROFILE VIEW AS TO BE ELIMINATED SHALL BE EITHER REMOVED IN ENTIRETY AND APPROPRIATELY BACKFILLED OR FILLED WITH FLOW FILL, AT THE CONTRACTOR'S DISCRETION.
4. CONTRACTOR TO VERIFY UTILITY SERVICES TO BE ABANDONED. ALL UTILITY SERVICE LATERALS TO BE ABANDONED SHALL BE COMPLETELY REMOVED FROM THE CITY RIGHT-OF-WAY.
5. DESIGN PLANS MAY NOT SHOW ALL ACTIVE CONNECTIONS TO THE

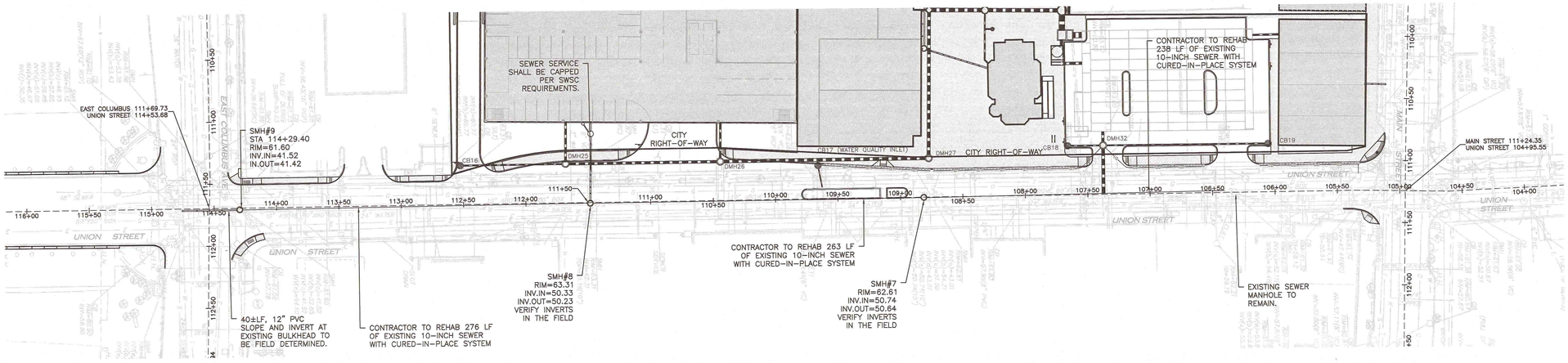

UNION STREET CENTERLINE PROFILE

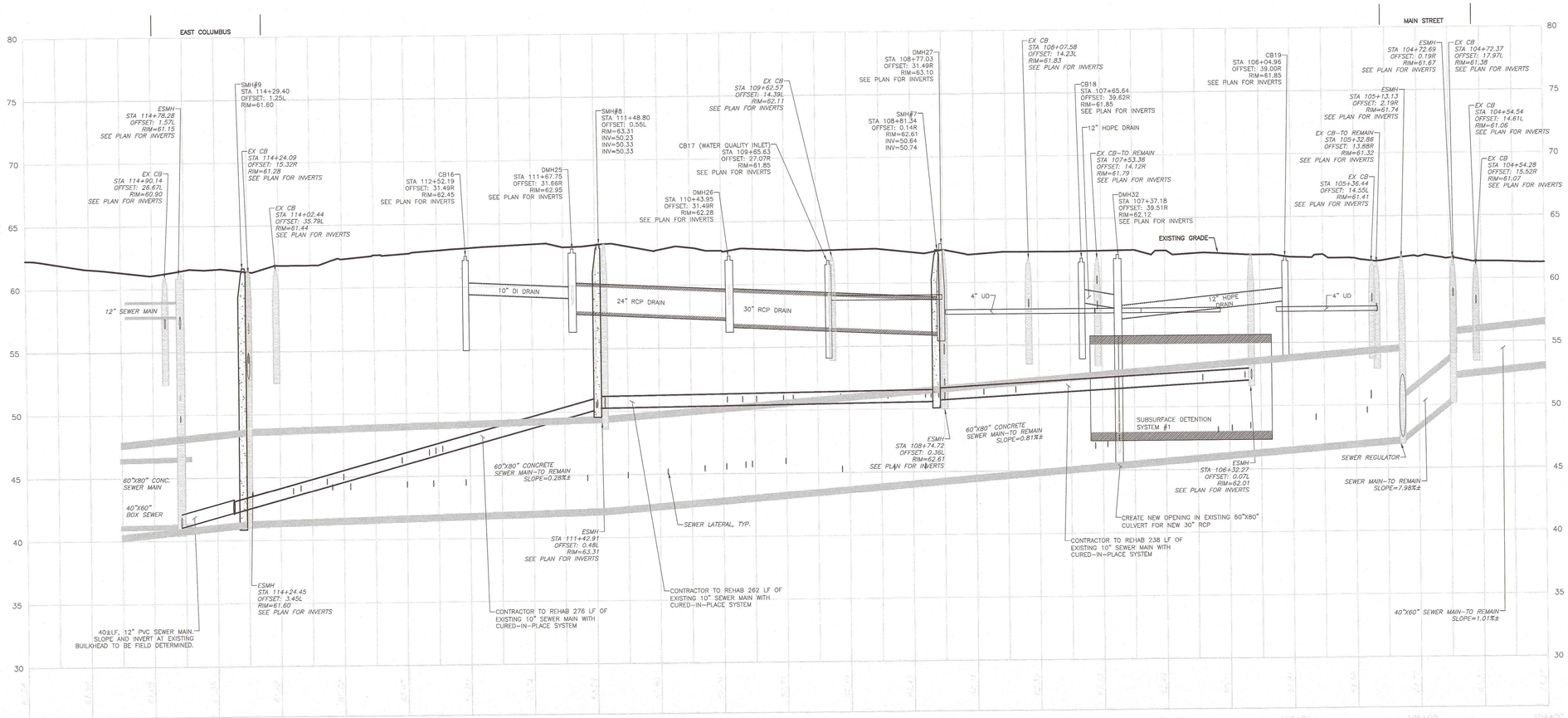

DIG SAFE
BEFORE YOU DIG CALL 811 OR 1-888-DIG-SAFE 1-888-344-7233

HORIZONTAL SCALE: 1" = 40'
VERTICAL SCALE: 1" = 4'

N:\PROJECTS\1839-02\CIVIL\DRAWINGS\CURRENT\C-1839-02 - PROFILES - SEWER DRAIN IMPROVEMENTS.DWG

ENGINEER:
ALLEN & MAJOR ASSOCIATES, INC.
CIVIL & STRUCTURAL ENGINEERING • LAND SURVEYING
ENVIRONMENTAL CONSULTING • LANDSCAPE ARCHITECTURE
100 SUMMER STREET, 7TH FLOOR
P.O. BOX 55819
BOSTON, MA 02205-5819
TEL: (781) 935-6889
www.allenmajor.com
WOBURN, MA • LAKEVILLE, MA • MANCHESTER, NH

SEAL:
COMMONWEALTH OF MASSACHUSETTS TIMOTHY J. WILLIAMS CIVIL No. 43119 REGISTERED PROFESSIONAL ENGINEER

CONSULTANT:

OWNER:
MGM RESORTS INTERNATIONAL
3260 Industrial Road, Las Vegas, NV 89109
702.692.9622 Phone 702.862.1750 Fax

MGM SPRINGFIELD
SPRINGFIELD, MA
PROJECT: MGM SPRINGFIELD - SITE/CIVIL RECORD

REVISIONS:

NO.	DATE	ISSUE
1	10/23/15	SITE PLAN APPROVAL

THIS DRAWING HAS BEEN PREPARED IN ELECTRONIC FORMAT. CLIENT/CLIENT'S REPRESENTATIVE OR CONSULTANT MAY BE PROVIDED COPIES OF DRAWINGS AND SPECIFICATIONS ON MAGNETIC MEDIA FOR HIS/HER INFORMATION AND USE FOR SPECIFIC APPLICATION TO THIS PROJECT, DUE TO THE POTENTIAL THAT THE INFORMATION CONTAINED ON THE MAGNETIC MEDIA MAY BE ALTERED OTHERWISE, ALLEN & MAJOR ASSOCIATES, INC. MAY REMOVE ALL INDICATION OF THE DOCUMENT'S AUTHORSHIP ON THE MAGNETIC MEDIA. PRINTED REPRESENTATIONS OF THE DRAWINGS AND SPECIFICATIONS ISSUED SHALL BE THE ONLY RECORD COPIES OF ALLEN & MAJOR ASSOCIATES, INC.'S WORK PRODUCT.

Copyright 2015 Allen & Major Associates, Inc.
All Rights Reserved

DRAWING TITLE:

SEWER MAIN & DRAINAGE IMPROVEMENTS PLAN & PROFILE UNION STREET

All dimensions, levels, layouts and field conditions shall be verified at the site by the contractor before proceeding with the work.

MRID Project No. 58012MASS

Consultant Project No. 1839-02D

Date: 08/14/2015

Drawn By	Checked By	Approved By
KEA	TJW	TJW

File Name: C1839-02D

S-9

NOTE: THE FOLLOWING APPROXIMATE UNION STREET SEWER MAIN ACTIVE TAP BREAK-IN LOCATIONS ARE TAKEN FROM "MGM CASINO SEWER LINE ASSESSMENT (STATE, MAIN & UNION STREET) REPORT", BY INLAND WATERS, INC., DATED AUGUST 2015.

STA 105+13.13 EXIST. SMH	STA 108+41.92 RIGHT	STA 112+79.72 LEFT
STA 105+36.92 LEFT	STA 108+54.72 RIGHT	STA 113+44.91 LEFT
STA 105+45.32 RIGHT	SAT 108+74.72 EXIST. SMH	STA 113+86.50 RIGHT
STA 105+45.32 LEFT	STA 109+57.72 RIGHT	STA 114+24.45 EXIST. SMH
STA 106+45.42 LEFT	STA 109+57.72 LEFT	
STA 106+52.62 LEFT	STA 110+28.22 LEFT	
STA 107+49.72 RIGHT	STA 110+87.12 RIGHT	
STA 107+61.42 RIGHT	STA 111+42.72 EXIST. SMH	
STA 108+12.12 LEFT	STA 112+53.91 RIGHT	

NOTES:
1. REFERENCE PLANS: EX-1, EX-2, C-2A, C-2B, C-3A, C-3B, C-3C, & C-3D.
2. IF A CONFLICT IS FOUND BETWEEN THE PLAN/PROFILE SHEETS AND THE REFERENCE SHEETS, INFORMATION SHOWN ON THE REFERENCE SHEETS SHALL GOVERN.
3. EXISTING STRUCTURES AND PIPES NOTED IN PROFILE VIEW AS TO BE ELIMINATED SHALL BE EITHER REMOVED IN ENTIRETY AND APPROPRIATELY BACKFILLED OR FILLED WITH FLOW FILL, AT THE CONTRACTOR'S DISCRETION.
4. CONTRACTOR TO VERIFY UTILITY SERVICES TO BE ABANDONED. ALL UTILITY SERVICE LATERALS TO BE ABANDONED SHALL BE COMPLETELY REMOVED FROM THE CITY RIGHT-OF-WAY.
5. DESIGN PLANS MAY NOT SHOW ALL ACTIVE CONNECTIONS TO THE

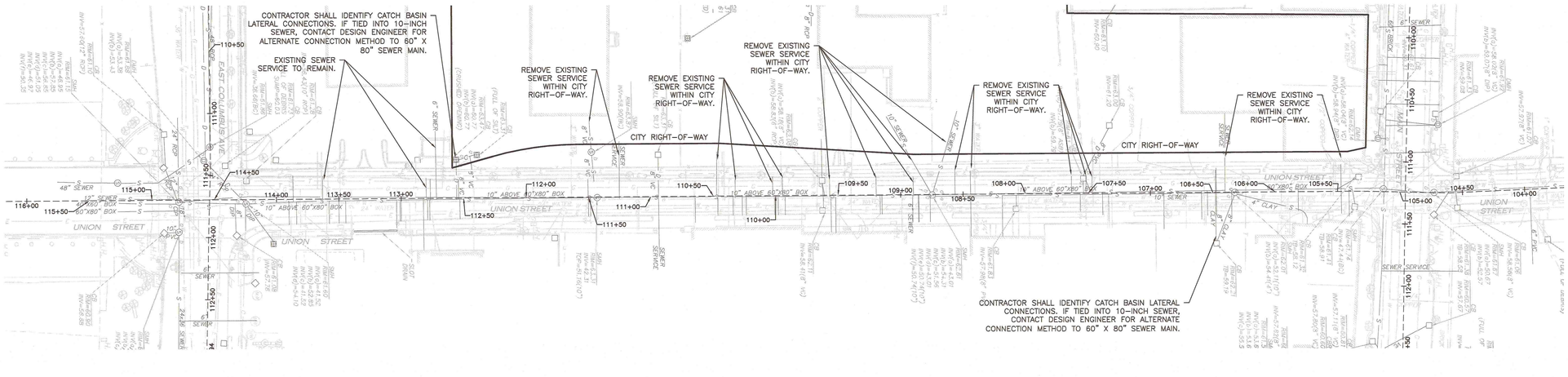

UNION STREET CENTERLINE PROFILE

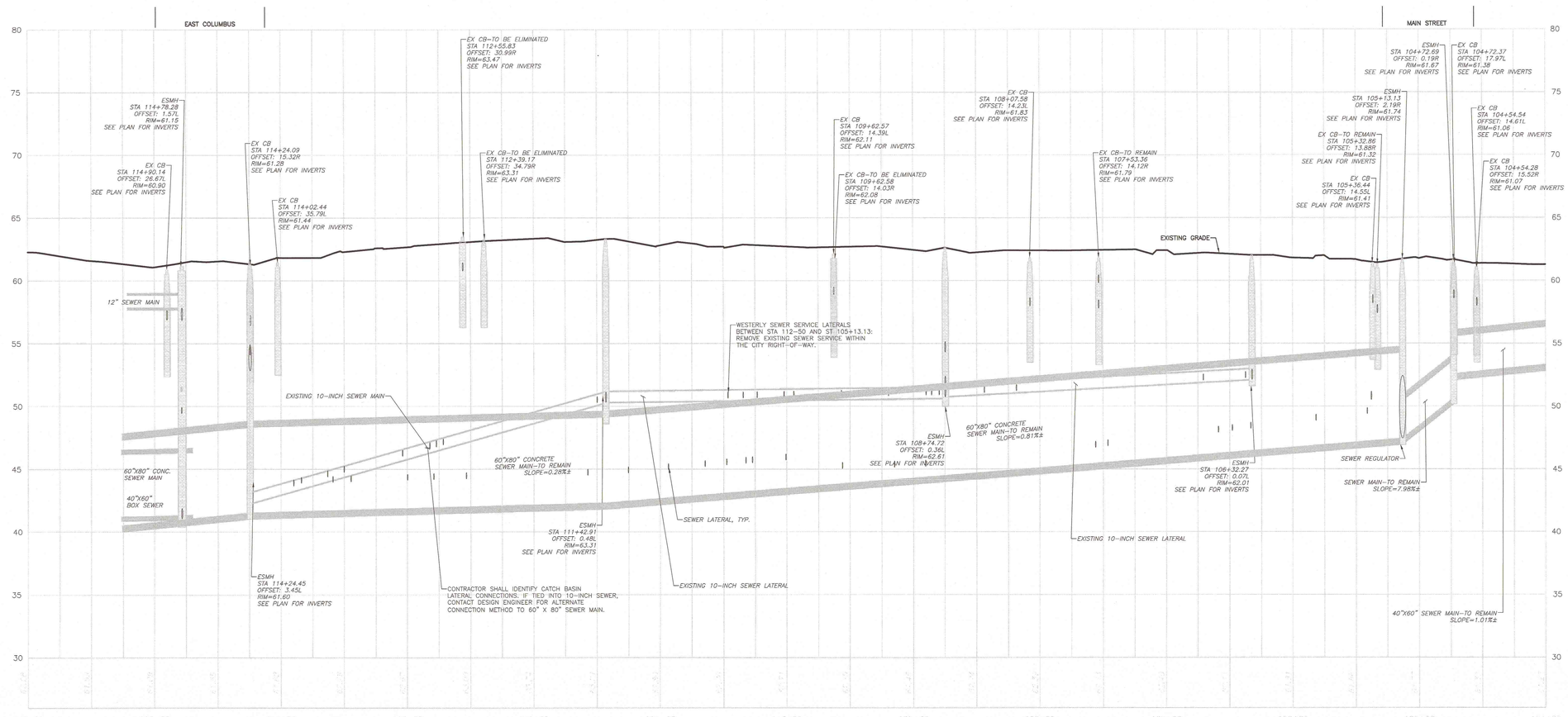

DIG SAFE

BEFORE YOU DIG CALL 811 OR 1-888-DIG-SAFE 1-888-344-7233

HORIZONTAL SCALE: 1" = 40'
VERTICAL SCALE: 1" = 4'

N:\PROJECTS\1839-02\CIVIL\DRAWINGS\CURRENT\C-1839-02 - PROFILES - SEWER DRAIN CONNECTIONS.DWG

ENGINEER:

ALLEN & MAJOR ASSOCIATES, INC.
civil • municipal • transportation • land development
100 CONGRESS WAY
WOBURN, MA 01801
TEL (781) 935-0889
FAX: (781) 935-2896
WOBURN, MA • LAKELAND, FL • MANCHESTER, NH

SEAL:

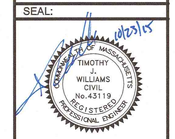

CONSULTANT:

OWNER:

MGM RESORTS INTERNATIONAL
3260 Industrial Road, Las Vegas,NV 89109
702.692.9622 Phone 702.862.1750 Fax

PROJECT: MGM SPRINGFIELD - SITE/CIVIL RECORD

MGM SPRINGFIELD
SPRINGFIELD, MA

REVISIONS:

NO.	DATE	ISSUE
1	10/23/15	SITE PLAN APPROVAL

THIS DRAWING HAS BEEN PREPARED IN ELECTRONIC FORMAT. CLIENT/CLIENT'S REPRESENTATIVE OR CONSULTANT MAY BE PERMITTED TO RECEIVE COPIES OF THIS DRAWING IN MAGNETIC MEDIA FOR VIEWING INFORMATION AND USE FOR SPECIFIC APPLICATION TO THIS PROJECT, DUE TO THE POTENTIAL THAT THE MAGNETIC INFORMATION MAY BE ALTERED UNINTENTIONALLY OR OTHERWISE, ALLEN & MAJOR ASSOCIATES, INC. MAY REMOVE ALL REFERENCES TO ITSELF FROM ELECTRONIC MEDIA. IN ADDITION, ELECTRONIC MEDIA, PRINTED REPRODUCTIONS OF THE DRAWINGS AND SPECIFICATIONS ISSUED SHALL BE THE ONLY RECORD COPIES OF ALLEN & MAJOR ASSOCIATES, INC.'S WORK PRODUCT.

Copyright 2015 Allen & Major Associates, Inc.
All Rights Reserved.

DRAWING TITLE:

SEWER MAIN & DRAINAGE CONNECTIONS PLAN & PROFILE UNION STREET

All dimensions, levels, layouts and field conditions shall be verified at the site by the contractor before proceeding with the work.

MRID Project No.	58012MASS
Consultant Project No.	1839-02D
Date:	08/14/2015

Drawn By	Checked By	Approved By
KEA	TJW	TJW

File Name: C1839-02D

S-10

NOTES:
1. REFERENCE PLANS: EX-1, EX-2, C-2A, C-2B, C-3A, C-3B, C-3C, & C-3D.
2. IF A CONFLICT IS FOUND BETWEEN THE PLAN/PROFILE SHEETS AND THE REFERENCE SHEETS, INFORMATION SHOWN ON THE REFERENCE SHEETS SHALL GOVERN.
3. EXISTING STRUCTURES AND PIPES NOTED IN PROFILE VIEW AS TO BE ELIMINATED SHALL BE EITHER REMOVED IN ENTIRETY AND APPROPRIATELY BACKFILLED OR FILLED WITH FLOW FILL, AT THE CONTRACTOR'S DISCRETION.
4. CONTRACTOR TO VERIFY UTILITY SERVICES TO BE ABANDONED. ALL UTILITY SERVICE LATERALS TO BE ABANDONED SHALL BE COMPLETELY REMOVED FROM THE CITY RIGHT-OF-WAY.
5. DESIGN PLANS MAY NOT SHOW ALL ACTIVE CONNECTIONS TO THE SEWER SYSTEM. IF ACTIVE EXISTING SEWER SERVICES NOT DOCUMENTED ON THE PLANS ARE FOUND IN THE FIELD, CONTRACTOR CAN INFORM THE SWSC AND RECORD ENGINEER.

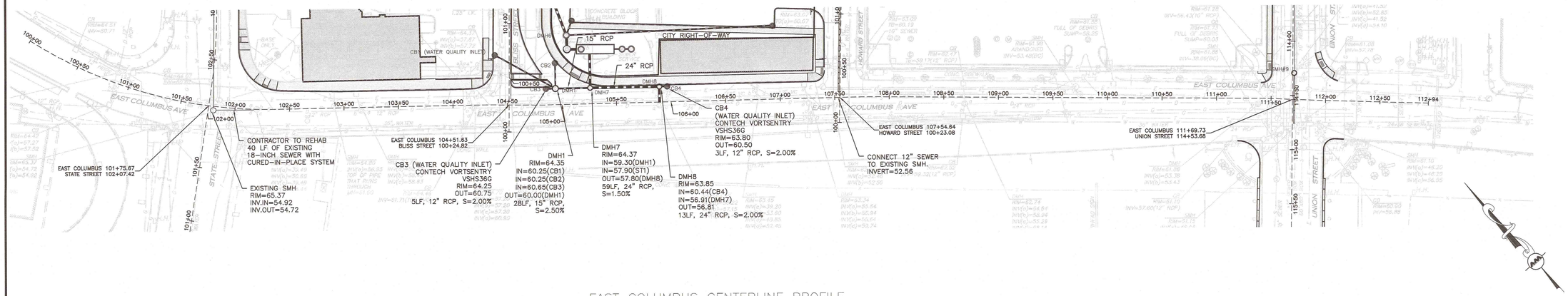

EAST COLUMBUS CENTERLINE PROFILE

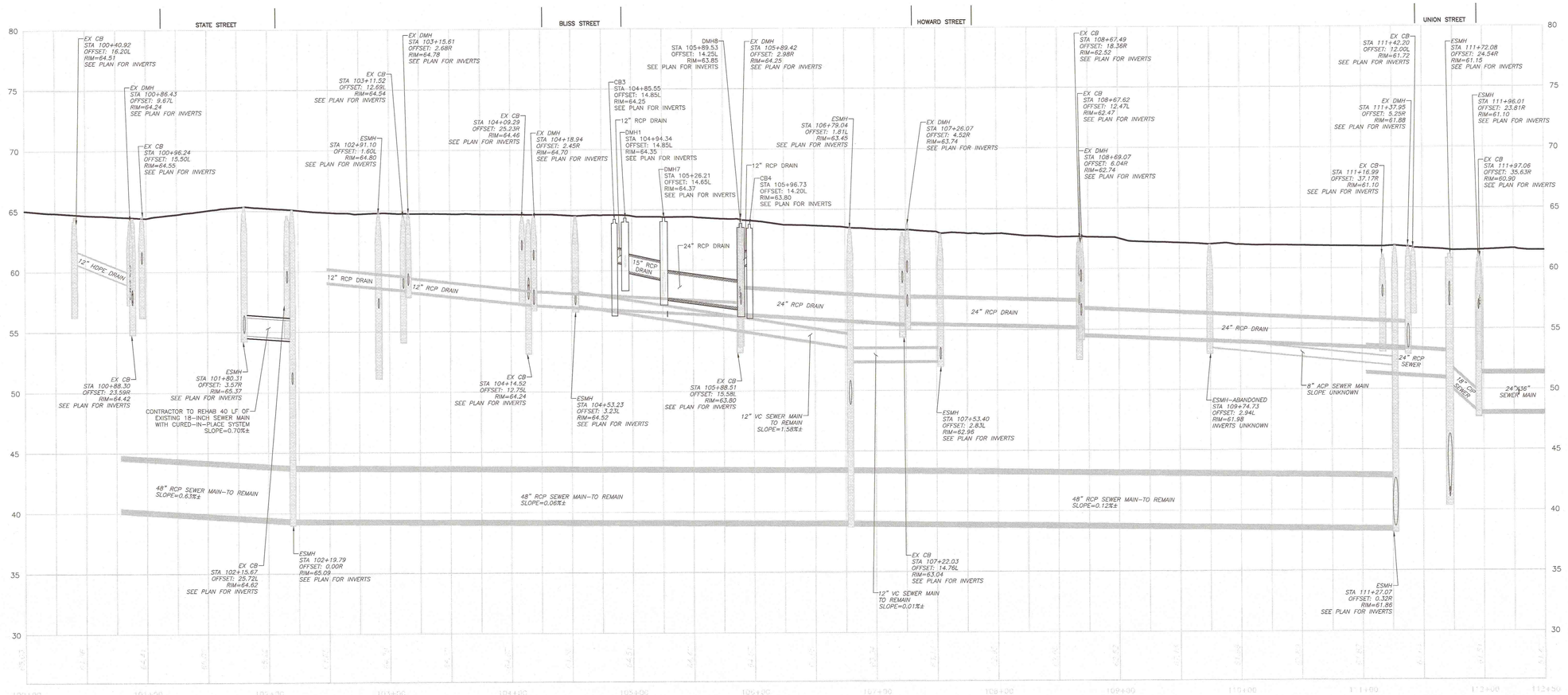

DIG SAFE

BEFORE YOU DIG CALL 811 OR 1-888-DIG-SAFE 1-888-344-7233

HORIZONTAL SCALE: 1" = 40'
VERTICAL SCALE: 1" = 4'

N:\PROJECTS\1839-02\CIVIL\DRAWINGS\CURRENT\C-1839-02 - PROFILES - SEWER DRAIN IMPROVEMENTS.DWG

ENGINEER:

ALLEN & MAJOR ASSOCIATES, INC.
civil engineers • land surveyors • transportation
environmental consultants • landscape architecture
100 COMMERCE WAY
WOBURN, MA 01801-1028
TEL: (781) 935-6468
FAX: (781) 935-8906
WOBURN, MA • RALEIGH, NC • MANCHESTER, NH

SEAL:

COMMONWEALTH OF MASSACHUSETTS
TIMOTHY J. WILLIAMS
CIVIL
No.43119
REGISTERED PROFESSIONAL ENGINEER
10/23/15

CONSULTANT:

OWNER:

MGM RESORTS INTERNATIONAL
3260 Industrial Road, Las Vegas,NV 89109
702.692.9622 Phone 702.862.1750 Fax

PROJECT: MGM SPRINGFIELD - SITE/CIVIL RECORD
MGM SPRINGFIELD
SPRINGFIELD, MA

REVISIONS:

NO.	DATE	ISSUE
1	10/23/15	SITE PLAN APPROVAL

THIS DRAWING HAS BEEN PREPARED IN ELECTRONIC FORMAT. CLIENT/CLIENT'S REPRESENTATIVE OR CONSULTANT MAY BE PROVIDED COPIES OF DRAWINGS AND SPECIFICATIONS ON MAGNETIC MEDIA FOR USE/USER INFORMATION AND USE FOR SPECIFIC APPLICATIONS ONLY. IT IS UNDERSTOOD AND AGREED THAT THE MAGNETIC INFORMATION MAY BE MODIFIED UNINTENTIONALLY OR CONSENSUALLY. ALLEN & MAJOR ASSOCIATES, INC. MAY REMOVE ALL INDICATION OF THE DOCUMENT'S AUTHORSHIP ON THE MAGNETIC MEDIA. PRINTED REPRESENTATIONS OF THE DRAWINGS AND SPECIFICATIONS SHALL BE CONSIDERED THE CONTRACT DOCUMENTS OF ALLEN & MAJOR ASSOCIATES, INC.'S WORK PRODUCT.

Copyright 2015 Allen & Major Associates, Inc.
All Rights Reserved

DRAWING TITLE:

SEWER MAIN & DRAINAGE IMPROVEMENTS PLAN & PROFILE E. COLUMBUS AVE.

All dimensions, levels, layouts and field conditions shall be verified at the site by the contractor before proceeding with the work.

MRID Project No.	58012MASS
Consultant Project No.	1839-02D
Date:	08/14/2015

Drawn By	Checked By	Approved By
KEA	TJW	TJW

File Name: C1839-02D

S-11

NOTES:
1. REFERENCE PLANS: EX-1, EX-2, C-2A, C-2B, C-3A, C-3B, C-3C, & C-3D.
2. IF A CONFLICT IS FOUND BETWEEN THE PLAN/PROFILE SHEETS AND THE REFERENCE SHEETS, INFORMATION SHOWN ON THE REFERENCE SHEETS SHALL GOVERN.
3. EXISTING STRUCTURES AND PIPES NOTED IN PROFILE VIEW AS TO BE ELIMINATED SHALL BE EITHER REMOVED IN ENTIRETY AND APPROPRIATELY BACKFILLED OR FILLED WITH FLOW FILL, AT THE CONTRACTOR'S DISCRETION.
4. CONTRACTOR TO VERIFY UTILITY SERVICES TO BE ABANDONED. ALL UTILITY SERVICE LATERALS TO BE ABANDONED SHALL BE COMPLETELY REMOVED FROM THE CITY RIGHT-OF-WAY.
5. DESIGN PLANS MAY NOT SHOW ALL ACTIVE CONNECTIONS TO THE SEWER SYSTEM. IF ACTIVE EXISTING SEWER SERVICES NOT DOCUMENTED ON THE PLANS ARE FOUND IN THE FIELD, CONTRACTOR CAN INFORM THE SWSC AND RECORD ENGINEER.

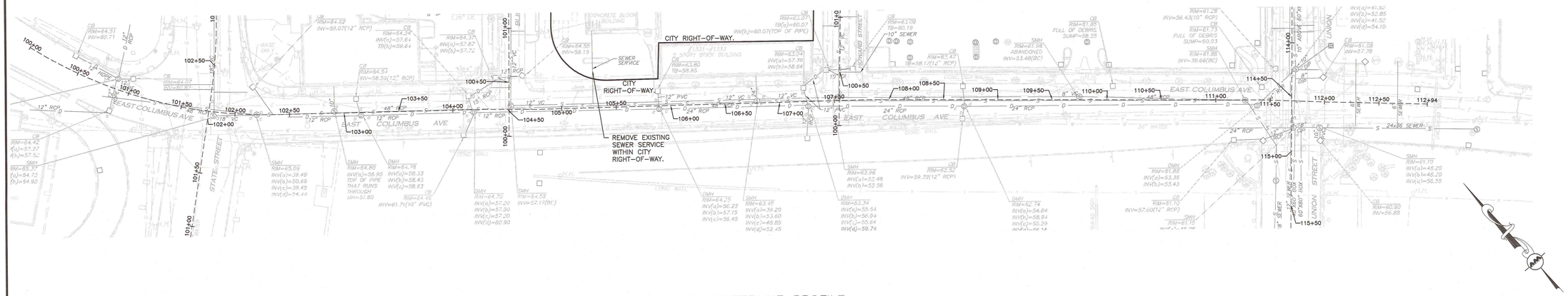

EAST COLUMBUS CENTERLINE PROFILE

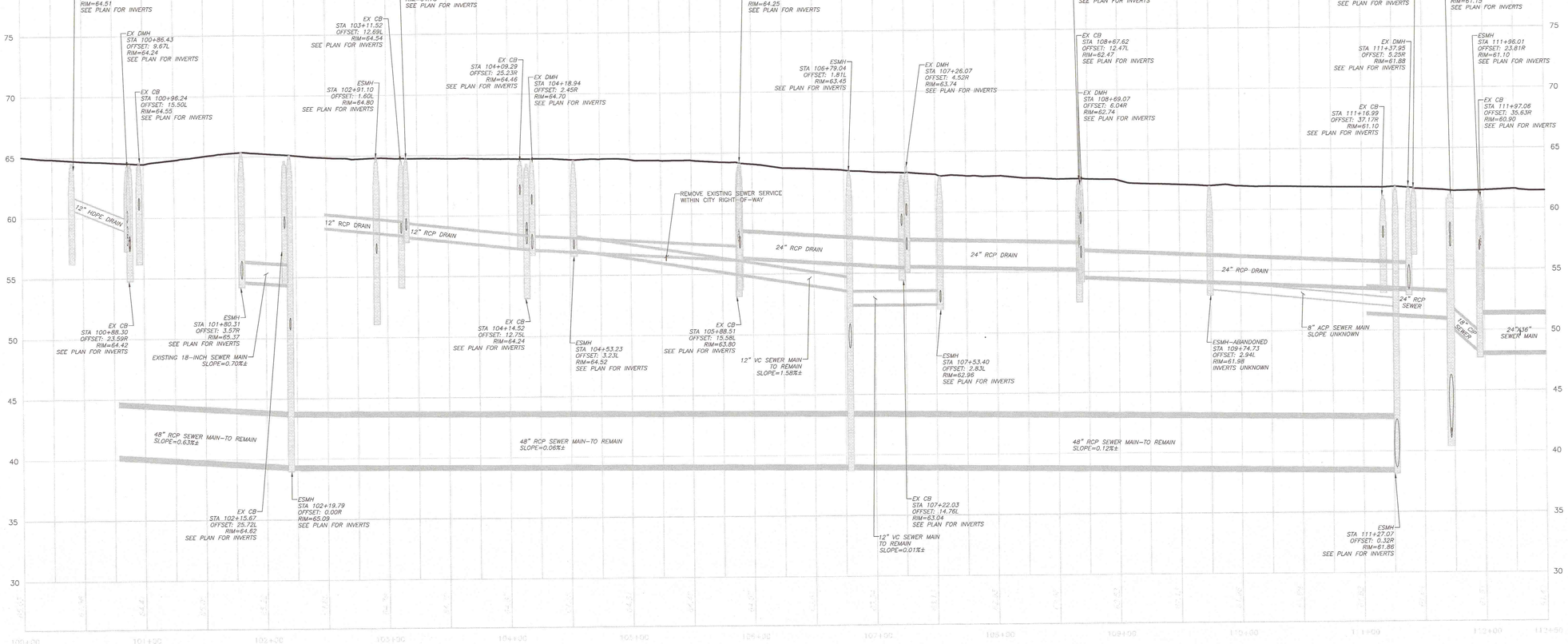

DIG SAFE

BEFORE YOU DIG CALL 811 OR 1-888-DIG-SAFE 1-888-344-7233

HORIZONTAL SCALE: 1" = 40'
VERTICAL SCALE: 1" = 4'

N:\PROJECTS\1839-02\CIVIL\DRAWINGS\CURRENT\C-1839-02 - PROFILES - SEWER DRAIN CONNECTIONS.DWG

ENGINEER :

ALLEN & MAJOR ASSOCIATES, INC.
civil & structural engineering • land surveying
environmental consulting • landscape architecture
100 COMMERCIAL WAY
P.O. BOX 1710
WILKESBORO, NC 28697
TEL (336) 838-0801
FAX (336) 838-0888
WORCESTER, MA • LAKEVILLE, MA • MANCHESTER, NH

SEAL:

COMMONWEALTH OF MASSACHUSETTS
TIMOTHY J. WILLIAMS
CIVIL
No. 43119
REGISTERED PROFESSIONAL ENGINEER
10/23/15

CONSULTANT:

OWNER :

MGM RESORTS INTERNATIONAL
3260 Industrial Road, Las Vegas, NV 89109
702.692.9622 Phone 702.862.1750 Fax

MGM SPRINGFIELD
SPRINGFIELD, MA
PROJECT: MGM SPRINGFIELD - SITE/CIVIL RECORD

REVISIONS :

NO.	DATE	ISSUE
1	10/23/15	SITE PLAN APPROVAL

THIS DRAWING HAS BEEN PREPARED IN ELECTRONIC FORMAT. ELECTRONIC DATA REPRESENTATIVE ON CONSULTANT MAY BE PROVIDED COPIES OF DRAWINGS AND SPECIFICATIONS ON MAGNETIC MEDIA FOR USER INFORMATION AND USE FOR SPECIFIC APPLICATION TO THIS PROJECT. DUE TO THE POTENTIAL THAT THE DATA MAY BE MODIFIED UNINTENTIONALLY OR OTHERWISE ON MAGNETIC MEDIA, ALLEN & MAJOR ASSOCIATES, INC. MAY REMOVE ALL INDICATION OF THE DOCUMENTS AUTHORSHIP ON THE MAGNETIC MEDIA. PRINTED REPRESENTATIONS OF THE DRAWINGS AND SPECIFICATIONS ISSUED SHALL BE THE ONLY RECORD COPIES OF ALLEN & MAJOR ASSOCIATES, INC.'S WORK PRODUCT.

Copyright 2015 Allen & Major Associates, Inc.
All Rights Reserved

DRAWING TITLE :

SEWER MAIN & DRAINAGE CONNECTIONS PLAN & PROFILE E. COLUMBUS AVE.

All dimensions, levels, layouts and field conditions shall be verified at the site by the contractor before proceeding with the work.

MRID Project No.	58012MASS
Consultant Project No.	1839-02D
Date:	08/14/2015

Drawn By	Checked By	Approved By
KEA	TJW	TJW

File Name: C1839-02D

S-12

NOTES:
1. REFERENCE PLANS: EX-1, EX-2, C-2A, C-2B, C-3A, C-3B, C-3C, & C-3D.
2. IF A CONFLICT IS FOUND BETWEEN THE PLAN/PROFILE SHEETS AND THE REFERENCE SHEETS, INFORMATION SHOWN ON THE REFERENCE SHEETS SHALL GOVERN.
3. EXISTING STRUCTURES AND PIPES NOTED IN PROFILE VIEW AS TO BE ELIMINATED SHALL BE EITHER REMOVED IN ENTIRETY AND APPROPRIATELY BACKFILLED OR FILLED WITH FLOW FILL, AT THE CONTRACTOR'S DISCRETION.
4. CONTRACTOR TO VERIFY UTILITY SERVICES TO BE ABANDONED. ALL UTILITY SERVICE LATERALS TO BE ABANDONED SHALL BE COMPLETELY REMOVED FROM THE CITY RIGHT-OF-WAY.
5. DESIGN PLANS MAY NOT SHOW ALL ACTIVE CONNECTIONS TO THE SEWER SYSTEM. IF ACTIVE EXISTING SEWER SERVICES NOT DOCUMENTED ON THE PLANS ARE FOUND IN THE FIELD, CONTRACTOR CAN INFORM THE SWSC AND RECORD ENGINEER.

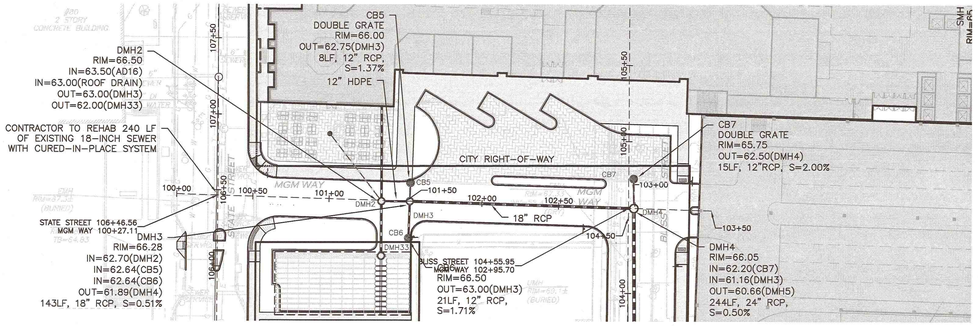

MGM WAY CENTERLINE PROFILE

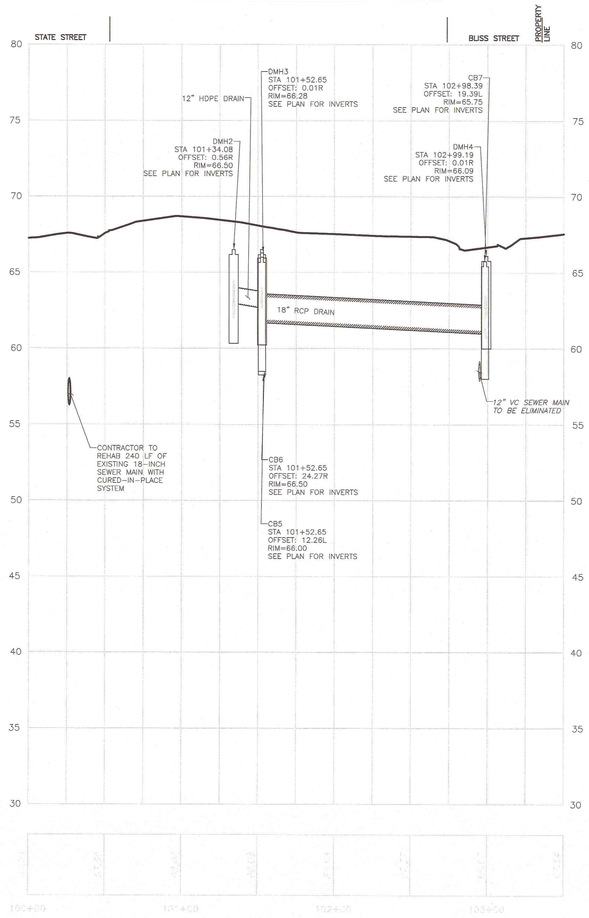

DIG SAFE

BEFORE YOU DIG CALL 811 OR 1-888-DIG-SAFE 1-888-344-7233

HORIZONTAL SCALE: 1" = 40'
VERTICAL SCALE: 1" = 4'

N:\PROJECTS\1839-02\CIVIL\DRAWINGS\CURRENT\C-1839-02 - PROFILES - SEWER DRAIN IMPROVEMENTS.DWG

ENGINEER:
ALLEN & MAJOR ASSOCIATES, INC.
civil & structural engineering land surveying
one monarch place, suite 1310, springfield, ma 01144
p: (413) 746-2317 f: (413) 746-8890
P.O. BOX 2188
WORCESTER, MA 01613-2188
FAX: (781) 935-5992
WORCESTER, MA • LAKEVILLE, MA • MANCHESTER, NH

SEAL:
COMMONWEALTH OF MASSACHUSETTS
TIMOTHY J. WILLIAMS
CIVIL
No. 43119
REGISTERED PROFESSIONAL ENGINEER

CONSULTANT:

OWNER:
MGM RESORTS INTERNATIONAL
3260 Industrial Road, Las Vegas,NV 89109
702.692.9622 Phone 702.862.1750 Fax

MGM SPRINGFIELD
SPRINGFIELD, MA

PROJECT:
MGM SPRINGFIELD - SITE/CIVIL RECORD

REVISIONS:

NO.	DATE	ISSUE
1	10/23/15	SITE PLAN APPROVAL

THIS DRAWING HAS BEEN PREPARED IN ELECTRONIC FORMAT. ALLEN & MAJOR ASSOCIATES, INC. RETAINS THE ORIGINAL INTENDED COPIES OF DRAWINGS AND SPECIFICATIONS ON MAGNETIC MEDIA FOR HIS/HER INFORMATION AND USE FOR SPECIFIC APPLICATION TO THIS PROJECT. DUE TO THE POTENTIAL THAT THE MAGNETIC INFORMATION MAY BE MODIFIED UNINTENTIONALLY OR OTHERWISE, ALLEN & MAJOR ASSOCIATES, INC. HEREBY GIVES NOTICE OF THE DOCUMENT'S AUTHORSHIP ON THE MAGNETIC MEDIA. PRINTED REPRESENTATIONS OF THE DRAWINGS AND SPECIFICATIONS SEALED SHALL BE THE ONLY RECORD COPIES OF ALLEN & MAJOR ASSOCIATES, INC.'S WORK PRODUCT.

Copyright 2015 Allen & Major Associates, Inc.
All Rights Reserved

DRAWING TITLE:

SEWER MAIN & DRAINAGE IMPROVEMENTS PLAN & PROFILE MGM WAY

All dimensions, levels, layouts and field conditions shall be verified at the site by the contractor before proceeding with the work.

MRID Project No.	58012MASS
Consultant Project No.	1839-02D
Date:	08/14/2015

Drawn By	Checked By	Approved By
KEA	TJW	TJW

File Name: C1839-02D

S-13

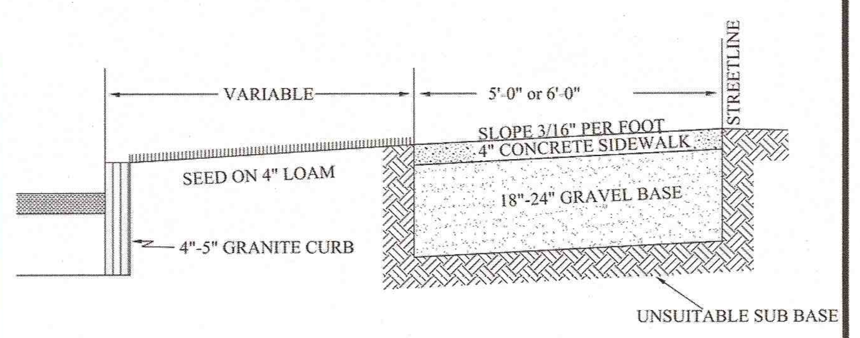

NOTES:
1. STANDARD SIDEWALK SLOPE IS 3/16 PER FT.
2. MINIMUM CONCRETE STRENGTH WILL BE 4,000# CLASS D
3. STANDARD ENGINEERING DETAIL FROM CITY OF SPRINGFIELD DEPARTMENT OF PUBLIC WORKS.

CITY OF SPRINGFIELD TYPICAL STANDARD SECTION FOR SIDEWALK CONSTRUCTION AT WITH UNSUITABLE SUB BASE (CONCRETE)

NOT TO SCALE (1)

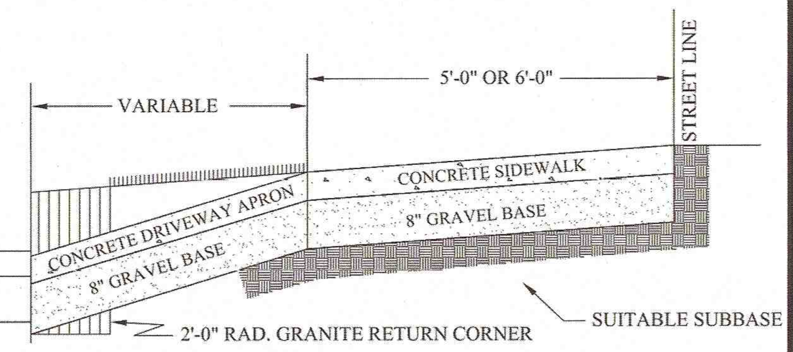

NOTES:
1. 9" CONCRETE MAY BE REPLACED BY 6" ASPHALT IF APPROVED.
2. STANDARD SIDEWALK SLOPE IS 3/16 FT.
3. MAXIMUM DRIVEWAY WIDTH IN 40' WITH TWO 2' CURB RETURNS (36' OPENING)
4. #3 REINFORCING BARS SHALL BE PLACED 12" O.C., 3" FROM GRAVEL BASE.
5. MINIMUM CONCRETE STRENGTH WILL BE 4,000#, CLASS D.
6. STANDARD ENGINEERING DETAIL FROM CITY OF SPRINGFIELD DEPARTMENT OF PUBLIC WORKS.

CITY OF SPRINGFIELD TYPICAL STANDARD SIDEWALK CONSTRUCTION AT COMMERCIAL DRIVEWAYS

NOT TO SCALE (2)

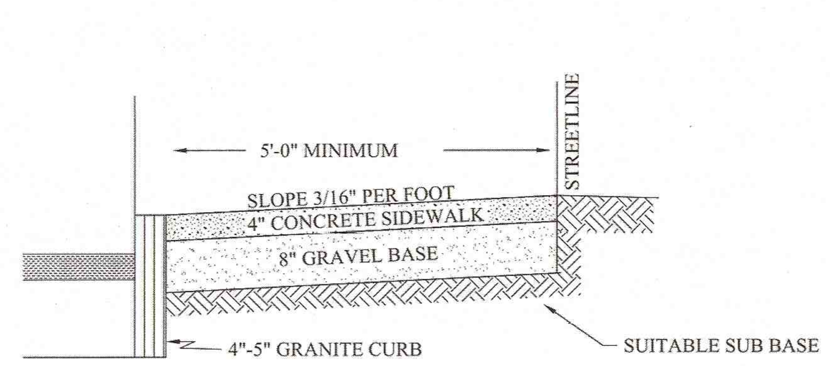

NOTES:
1. STANDARD SIDEWALK SLOPE IS 3/16 PER FT.
2. MINIMUM CONCRETE STRENGTH WILL BE 4,000# CLASS D
3. STANDARD ENGINEERING DETAIL FROM CITY OF SPRINGFIELD DEPARTMENT OF PUBLIC WORKS.

CITY OF SPRINGFIELD TYPICAL STANDARD SECTION FOR SIDEWALK CONSTRUCTION AT CURB LINE (CONCRETE)

NOT TO SCALE (4)

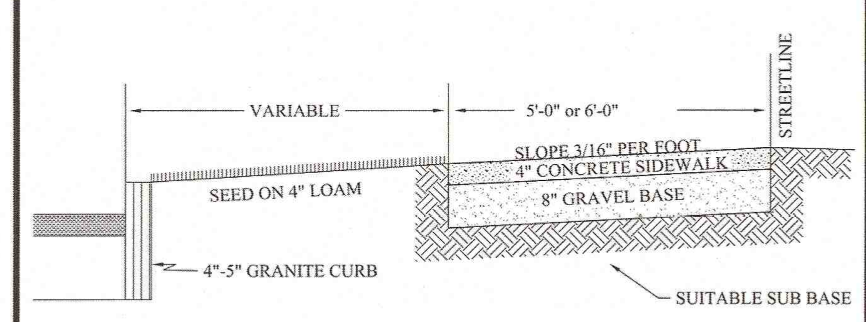

NOTES:
1. STANDARD SIDEWALK SLOPE IS 3/16 PER FT.
2. MINIMUM CONCRETE STRENGTH WILL BE 4,000# CLASS D
3. STANDARD ENGINEERING DETAIL FROM CITY OF SPRINGFIELD DEPARTMENT OF PUBLIC WORKS.

CITY OF SPRINGFIELD TYPICAL STANDARD SECTION FOR SIDEWALK CONSTRUCTION (CONCRETE)

NOT TO SCALE (5)

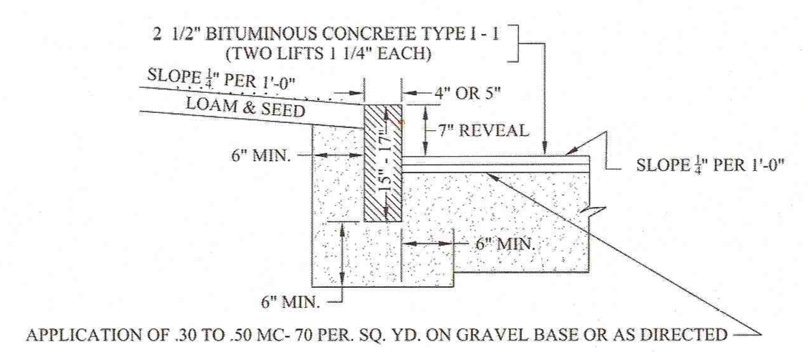

NOTES:
1. TYPE VB, 4" THICKNESS, MIN. OF 6' LENGTH GRANITE CURBING FOR RESIDENTIAL STREETS.
2. TYPE VB, 5" THICKNESS, MIN. OF 6' LENGTH GRANITE CURBING FOR ALL OTHER TYPES OF STREETS.
3. TYPE 'A' GRANITE CURB CORNERS FOR ALL TYPES OF SUBDIVISION EXCEPT "ROUNDED CORNER CURBING" MAY BE SUBSTITUTED AT DESCRETION OF THE DIRECTOR OF THE DEPARTMENT OF PUBLIC WORKS.
4. STANDARD ENGINEERING DETAIL FROM CITY OF SPRINGFIELD DEPARTMENT OF PUBLIC WORKS.

CITY OF SPRINGFIELD GRANITE CURBING

NOT TO SCALE (6)

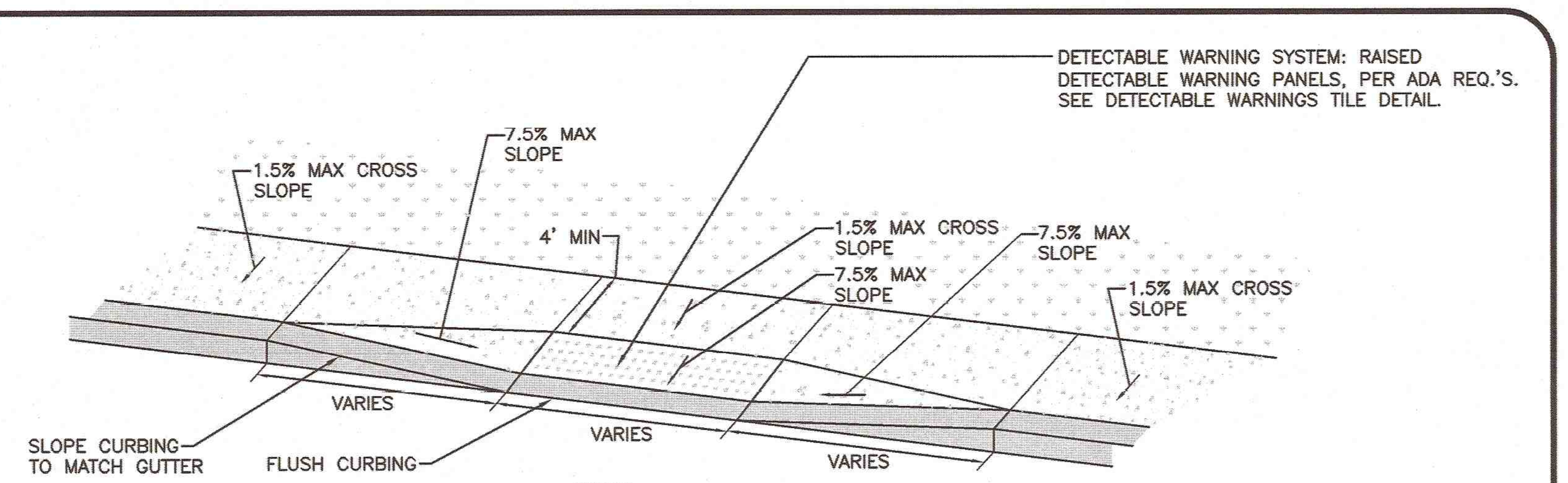

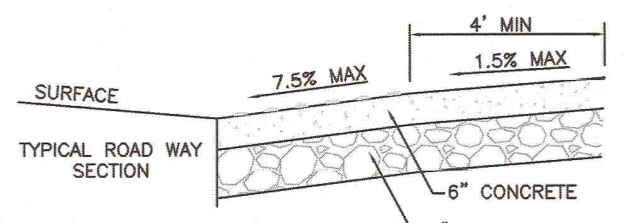

SECTION VIEW

NOTES:
1. THE DIMENSIONS SHOWN AT ROADWAY EDGE ARE FIXED DISTANCES.
2. RAMP CROSS SECTION TO BE THE SAME AS ADJACENT SIDEWALK; I.E. DEPTH OF SURFACE AND FOUNDATION.
3. PORTLAND CEMENT CONCRETE RAMPS ARE TO BE TEXTURED BY BROOMING IN A DIRECTION PARALLEL TO THE LENGTH OF THE RAMP.
4. IN NO CASE ARE THE RAMPS TO BE PLACED BEHIND THE STOP LINE.
5. THE DIMENSIONS ARE SUBJECT TO CHANGE IN THE FIELD IF EXISTING APPURTENANCES OR CONDITIONS WILL MAKE THE RAMP LOCATIONS IMPRACTICAL OR UNSAFE.

HANDICAP CURB CUT & CURB TRANSITION

NOT TO SCALE (7)

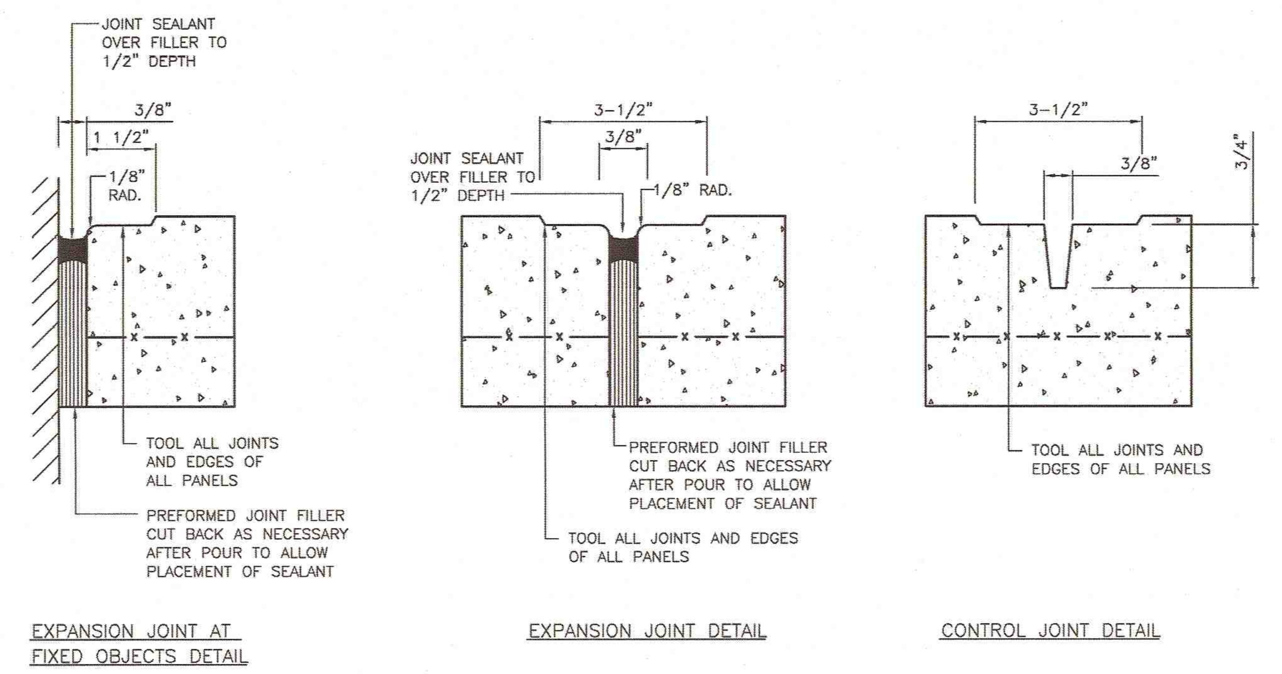

NOTES:
1. PROVIDE EXPANSION JOINTS AT MIN. 15' O.C. MIN.
2. PROVIDE CONTROL JOINTS AT 5' O.C. UNLESS SHOWN OTHERWISE.
3. PROVIDE BROOM FINISH IN DIRECTION PERPENDICULAR TO DIRECTION OF TRAVEL.
4. CEMENT CONCRETE SHALL BE 4,500 PSI AIR ENTRAINED.
5. REFER TO LANDSCAPING PLANS FOR ADDITIONAL JOINTS.
6. JOINT FILLERS SHALL BE RESILIENT PREMOLDED BITUMINOUS IMPREGNATED FIBERBOARD. SUBMIT SHOP DRAWINGS.
7. JOINT SEALANTS SHALL BE NON- PRIMING POURABLE SELF-LEVELING TYPE. SUBMIT SHOP DRAWINGS.
8. ALL CURBS TO HAVE ¾" EXPANSION JOINTS AT MAXIMUM 100 FEET WITH DOWELS AND CONTROL JOINTS AT MAXIMUM 15 FEET

CONCRETE SIDEWALK JOINTS

NOT TO SCALE (8)

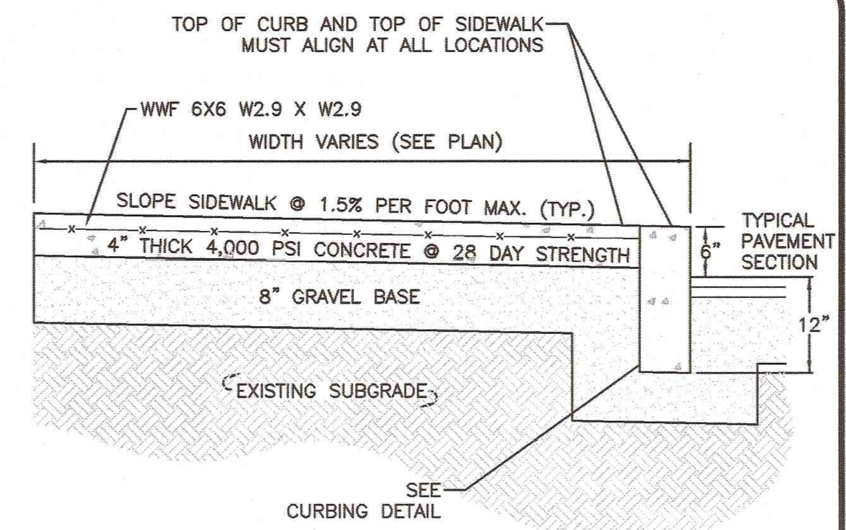

NOTES:
1. SIDEWALK TO HAVE TOOLED JOINTS IN A 5' x 5' (TYP.) GRID WITH EXPANSION JOINTS 15' ON CENTER AND PREMOLDED FILLER.
2. TOOLED JOINT 6" FROM FACE OF CURB
3. SEE PLAN FOR ELEVATIONS AT CURB
4. SIDEWALK CROSS SLOPE TO BE 1.5% MAX & SIDEWALK LONGITUDINAL RUNNING SLOPE TO BE 4.5% MAX, TYP.

CONCRETE SIDEWALK

NOT TO SCALE (9)

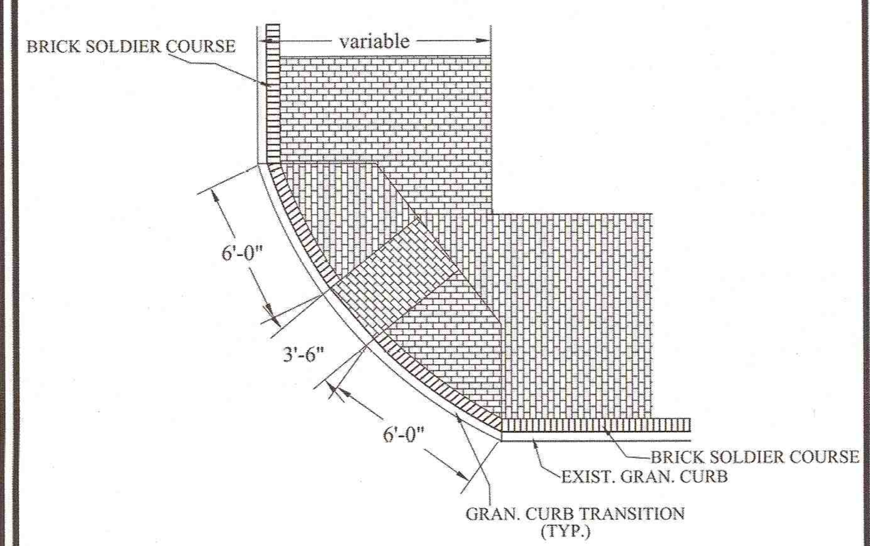

NOTES:
1. STANDARD ENGINEERING DETAIL FROM CITY OF SPRINGFIELD DEPARTMENT OF PUBLIC WORKS.

CITY OF SPRINGFIELD BRICK WHEELCHAIR RAMP

NOT TO SCALE (10)

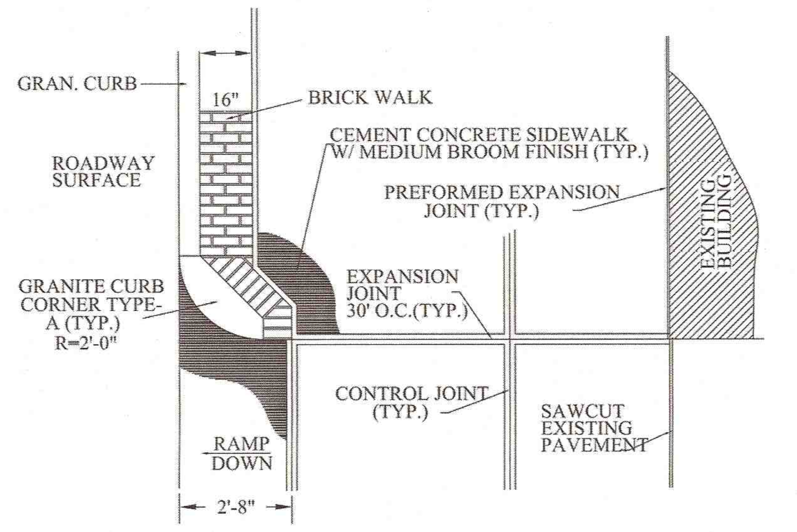

NOTES:
1. STANDARD ENGINEERING DETAIL FROM CITY OF SPRINGFIELD DEPARTMENT OF PUBLIC WORKS.

CITY OF SPRINGFIELD BRICK SIDEWALK, SIDEWALK TREATMENT AT DRIVEWAYS

NOT TO SCALE (11)

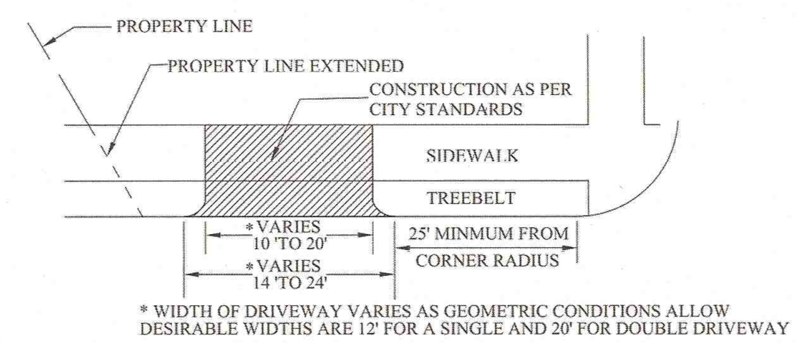

NOTES:
1. STANDARDS 2' CURB RETURNS SHALL BE UTILIZED.
2. ENTIRE DRIVEWAY INCLUDING 2' CURB RETURNS, MUST BE WITHIN THE PROP. LINES EXTENDED OF THE PORP. WHICH THE DRIVEWAY SERVES.
3. DRIVEWAY APRON MUST MEET SIDEWALK GRADE.
4. PORTION OF DRIVEWAY WITHIN THE PUBLIC WAY MUST BE CONSTRUCTED ACCORDING TO CITY SPECIFICATIONS.
5. IF ANY TREES, POLES, SIGNS, OR UTILITIES ARE LOCATED WITHIN THE LIMITS OF THE PROPOSED DRIVEWAY, THE APPROPRIATE DEPARTMENT MUST BE NOTIFIED FOR REMOVAL OR RELOCATION OF SUCH.
6. CONDITIONS MAY TEND TO ALTER PROPOSED WIDTH AND LOCATION OF DRIVEWAY AND ANY VARIATIONS FROM THE STANDARDS SHOWN MUST BE APPROVED BY THE TRAFFIC ENGINEER.
7. STANDARD ENGINEERING DETAIL FROM CITY OF SPRINGFIELD DEPARTMENT OF PUBLIC WORKS.

CITY OF SPRINGFIELD TYPICAL RESIDENTIAL DRIVEWAY

NOT TO SCALE (12)

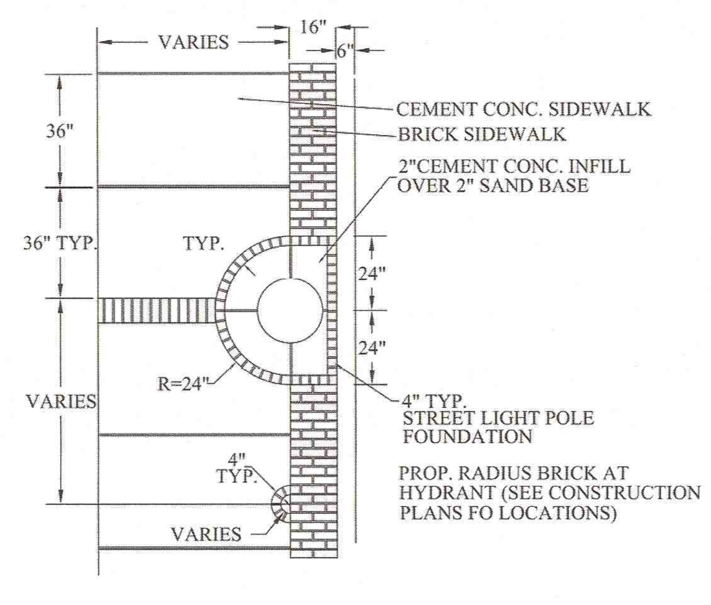

NOTES:
1. STANDARD ENGINEERING DETAIL FROM CITY OF SPRINGFIELD DEPARTMENT OF PUBLIC WORKS.

CITY OF SPRINGFIELD BRICK SIDEWALK, SIDEWALK TREATMENT AT UTILITIES

NOT TO SCALE (13)

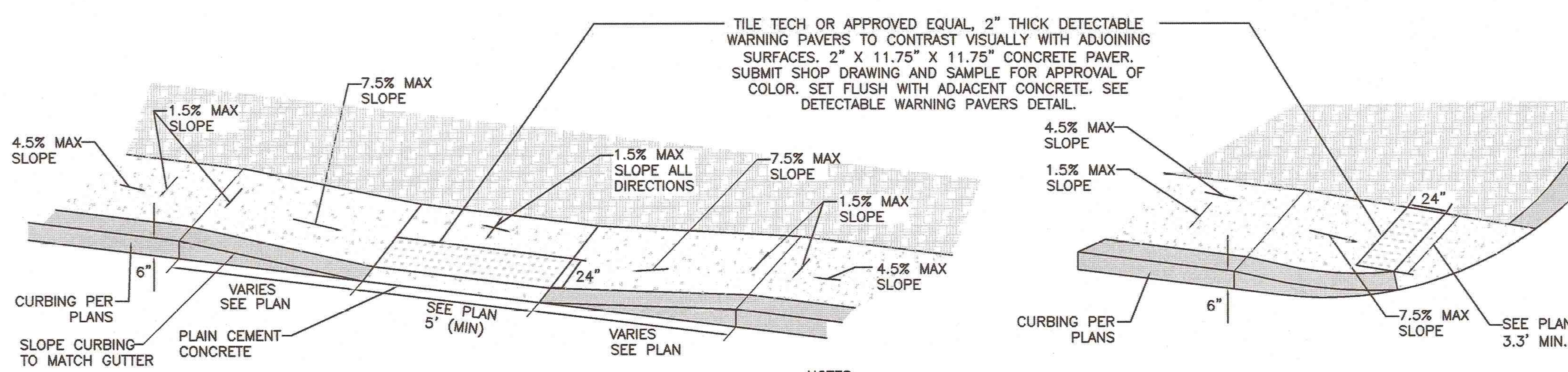

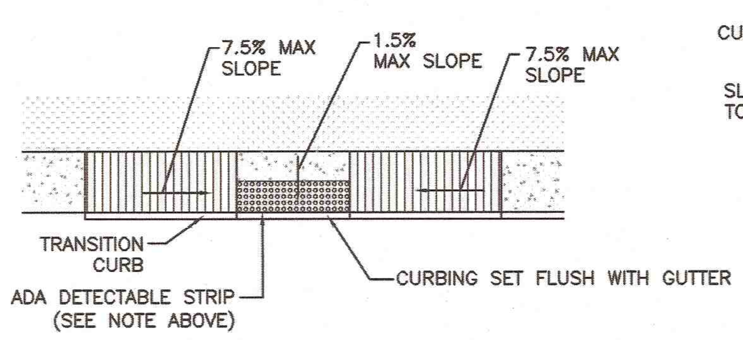

PLAN VIEW

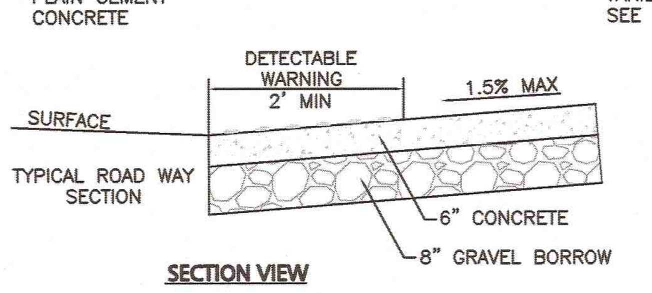

SECTION VIEW

NOTES:
1. THE DIMENSIONS SHOWN AT ROADWAY EDGE ARE FIXED DISTANCES.
2. RAMP CROSS SECTION TO BE THE SAME AS ADJACENT SIDEWALK; I.E. DEPTH OF SURFACE AND FOUNDATION.
3. PORTLAND CEMENT CONCRETE RAMPS ARE TO BE TEXTURED BY BROOMING IN A DIRECTION PARALLEL TO THE LENGTH OF THE RAMP.
4. IN NO CASE ARE THE RAMPS TO BE PLACED BEHIND THE STOP LINE.
5. THE DIMENSIONS ARE SUBJECT TO CHANGE IN THE FIELD IF EXISTING APPURTENANCES OR CONDITIONS WILL MAKE THE RAMP LOCATIONS IMPRACTICAL OR UNSAFE. CONSULT CIVIL ENGINEER PRIOR TO MAKING ANY MODIFICATIONS.

HANDICAP CURB CUT & CURB TRANSITION

NOT TO SCALE (14)

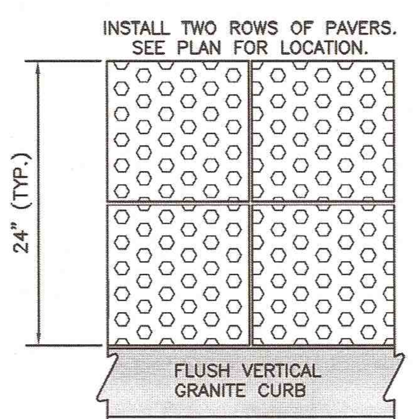

TYPICAL PLAN VIEW

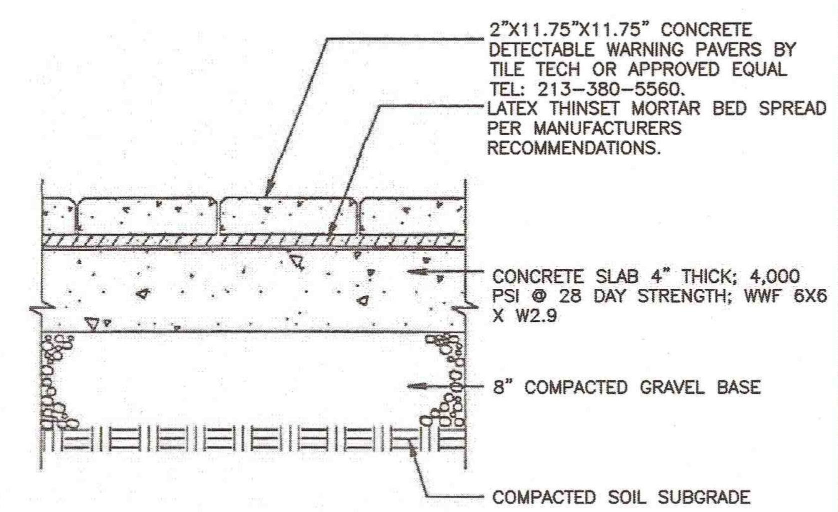

TYPICAL SECTION VIEW

NOTES:
1. CONCRETE SLAB SHALL BE SLOPED 1.5% CROSS PITCH MAX TO PROVIDE COMPLETE SURFACE DRAINAGE. SEE GRADING PLAN.
2. SLAB TO HAVE STEEL TROWEL AND FINE BROOM FINISH. DO NOT USE CURING COMPOUNDS. CONTRACTOR TO ADD EXPANSION JOINTS AND PREMOLDED FILLER AT EDGE OF TILES AND ADJACENT MATERIAL.
3. SET TILES FLUSH WITH ADJACENT MATERIALS.
4. SUBMIT SHOP DRAWINGS OF TILES AND SAMPLE FOR APPROVAL OF COLOR TO OWNER / ARCH.
5. INSTALL DETECTABLE WARNING PAVERS PER MANUFACTURER'S RECOMMENDATIONS.

DETECTABLE WARNING PAVERS

NOT TO SCALE (15)

N:\PROJECTS\1839-02\CIVIL\DRAWINGS\CURRENT\C-1839-02 - DETAILS.DWG

ENGINEER:

ALLEN & MAJOR ASSOCIATES, INC.
civil & structural engineering ♦ land surveying
environmental consulting ♦ landscape architecture
www.allenmajor.com
100 COMMERCE WAY
P.O. BOX 2118
WOBURN MA 01888-0118
TEL: (781) 935-6889
FAX: (781) 935-2896
WOBURN, MA ♦ LAKEVILLE, MA ♦ MANCHESTER, NH

SEAL:

COMMONWEALTH OF MASSACHUSETTS
TIMOTHY J. WILLIAMS
CIVIL
No.43119
REGISTERED PROFESSIONAL ENGINEER
10/23/15

CONSULTANT:

OWNER:

MGM RESORTS INTERNATIONAL™
3260 Industrial Road, Las Vegas,NV 89109
702.692.9622 Phone 702.862.1750 Fax

MGM SPRINGFIELD
SPRINGFIELD, MA

PROJECT:
MGM SPRINGFIELD - SITE/CIVIL RECORD

REVISIONS:

NO.	DATE	ISSUE
1	10/23/15	SITE PLAN APPROVAL

THIS DRAWING HAS BEEN PREPARED IN ELECTRONIC FORMAT. CLIENT/CLIENT'S REPRESENTATIVE OR CONSULTANT MAY BE PROVIDED COPIES OF DRAWINGS AND SPECIFICATIONS ON MAGNETIC MEDIA FOR HIS/HER INFORMATION AND USE FOR SPECIFIC APPLICATION TO THIS PROJECT. DUE TO THE POTENTIAL THAT THE MAGNETIC INFORMATION MAY BE MODIFIED UNINTENTIONALLY OR OTHERWISE, ALLEN & MAJOR ASSOCIATES, INC. MAY REMOVE ALL INDICATION OF THE DOCUMENT'S AUTHORSHIP ON THE MAGNETIC MEDIA. PRINTED REPRESENTATIONS OF THE DRAWINGS AND SPECIFICATIONS ISSUED SHALL BE THE ONLY RECORD COPIES OF ALLEN & MAJOR ASSOCIATES, INC.'S WORK PRODUCT.

Copyright 2015 Allen & Major Associates, Inc. All Rights Reserved

DRAWING TITLE:

DETAILS SIDEWALK & CURBING

All dimensions, levels, layouts and field conditions shall be verified at the site by the contractor before proceeding with the work.

MRID Project No.	58012MASS
Consultant Project No.	1839-02D
Date:	08/14/2015

Drawn By	Checked By	Approved By
KEA	TJW	TJW

File Name: C1839-02D

D-1

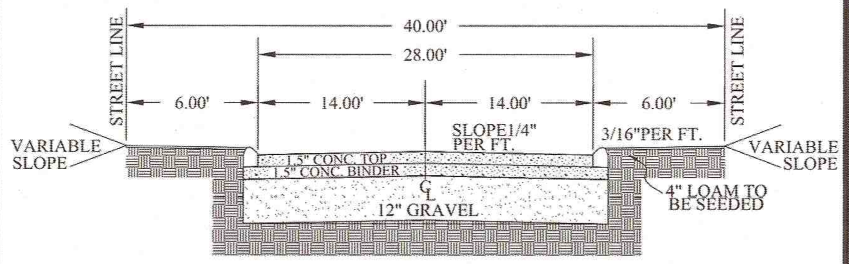

NOTES:
1. EXISTING SUBGRADE TO BE SHAPED AND COMPACTED.
2. USE CALCIUM CHLORIDE APPLIED AT 1.5 LBS PER SQ. YD. OR APPROVED ALTERNATE.
3. SURFACE COURSE:
   1.5" BITUMINOUS CONCRETE TOP;
   1.5" BITUMINOUS CONCRETE BINDER
4. BASE:
   12" GRAVEL
5. STANDARD ENGINEERING DETAIL FROM CITY OF SPRINGFIELD DEPARTMENT OF PUBLIC WORKS.

CITY OF SPRINGFIELD TYPICAL SECTION 40' STREET LINE 28' PAVEMENT
NOT TO SCALE
(1)

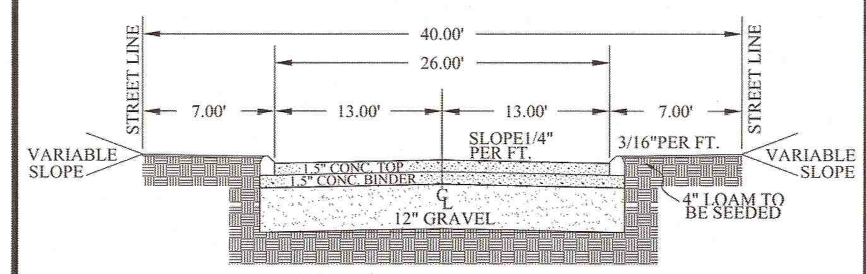

NOTES:
1. EXISTING SUBGRADE TO BE SHAPED AND COMPACTED.
2. USE CALCIUM CHLORIDE APPLIED AT 1.5 LBS PER SQ. YD. OR APPROVED ALTERNATE.
3. SURFACE COURSE:
   1.5" BITUMINOUS CONCRETE TOP;
   1.5" BITUMINOUS CONCRETE BINDER
4. BASE:
   12" GRAVEL
5. STANDARD ENGINEERING DETAIL FROM CITY OF SPRINGFIELD DEPARTMENT OF PUBLIC WORKS.

CITY OF SPRINGFIELD TYPICAL SECTION 40' STREET LINE 26' PAVEMENT CAPE COD BERM
NOT TO SCALE
(2)

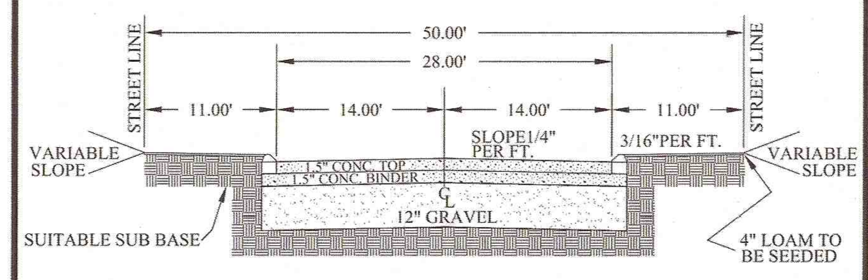

NOTES:
1. EXISTING SUBGRADE TO BE SHAPED AND COMPACTED.
2. USE CALCIUM CHLORIDE APPLIED AT 1.5 LBS PER SQ. YD. OR APPROVED ALTERNATE.
3. SURFACE COURSE:
   1.5" BITUMINOUS CONCRETE TOP;
   1.5" BITUMINOUS CONCRETE BINDER
4. BASE:
   12" GRAVEL
5. STANDARD ENGINEERING DETAIL FROM CITY OF SPRINGFIELD DEPARTMENT OF PUBLIC WORKS.

CITY OF SPRINGFIELD TYPICAL SECTION 50' STREET LINE 28' PAVEMENT CAPECOD BERM
NOT TO SCALE
(3)

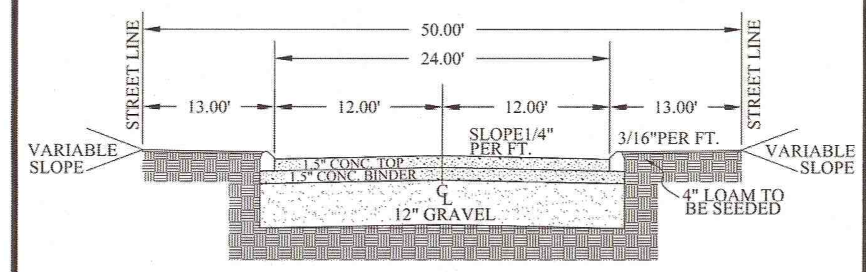

NOTES:
1. EXISTING SUBGRADE TO BE SHAPED AND COMPACTED.
2. USE CALCIUM CHLORIDE APPLIED AT 1.5 LBS PER SQ. YD. OR APPROVED ALTERNATE.
3. SURFACE COURSE:
   1.5" BITUMINOUS CONCRETE TOP;
   1.5" BITUMINOUS CONCRETE BINDER
4. BASE:
   12" GRAVEL
5. STANDARD ENGINEERING DETAIL FROM CITY OF SPRINGFIELD DEPARTMENT OF PUBLIC WORKS.

CITY OF SPRINGFIELD TYPICAL SECTION 50' STREET LINE 24' PAVEMENT
NOT TO SCALE
(4)

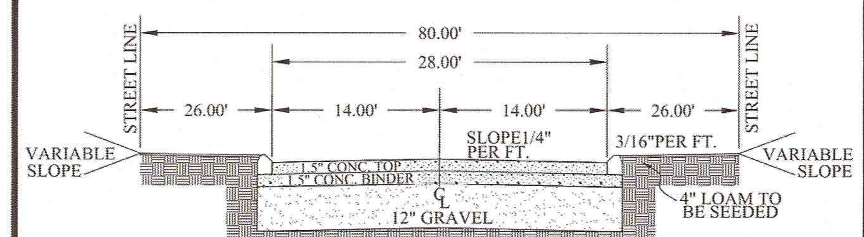

NOTES:
1. EXISTING SUBGRADE TO BE SHAPED AND COMPACTED.
2. USE CALCIUM CHLORIDE APPLIED AT 1.5 LBS PER SQ. YD. OR APPROVED ALTERNATE.
3. SURFACE COURSE:
   1.5" BITUMINOUS CONCRETE TOP;
   1.5" BITUMINOUS CONCRETE BINDER
4. BASE:
   12" GRAVEL
5. STANDARD ENGINEERING DETAIL FROM CITY OF SPRINGFIELD DEPARTMENT OF PUBLIC WORKS.

CITY OF SPRINGFIELD TYPICAL SECTION 80' STREET LINE 28' PAVEMENT
NOT TO SCALE
(5)

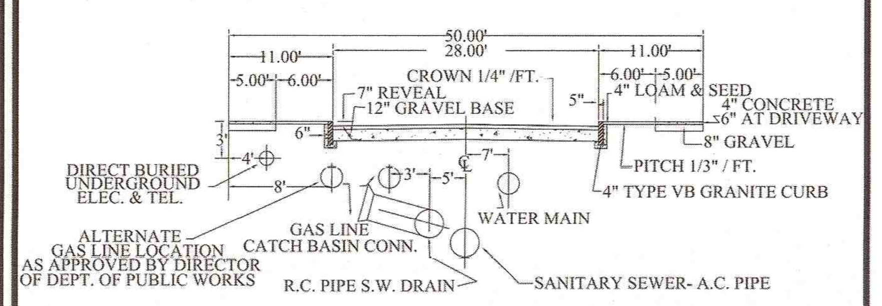

NOTES:
1. WHERE PRACTICABLE STORMWATER LINES ARE PLACED 5' OFF THE CENTER LINE ON THE SOUTH OR WEST SIDE OF THE STREET.
2. WATER MAINS ARE 18' FEET OFF STREET LINE, EITHER NORTH OR EAST SIDE OF THE STREET.
3. CONNECTIONS FROM CATCH BASINS TO MANHOLES – V.C. PIPE – CLASS 200-64T OR EQUAL.
4. SURFACE COURSE 3" TYPE I BIT. CON. LAID IN TWO COURSE:
   1-1/2" TOP COURSE;
   1-1/2" BINDER COURSE.
5. STANDARD ENGINEERING DETAIL FROM CITY OF SPRINGFIELD DEPARTMENT OF PUBLIC WORKS.

CITY OF SPRINGFIELD TYPICAL SECTION FOR UTILITIES
NOT TO SCALE
(6)

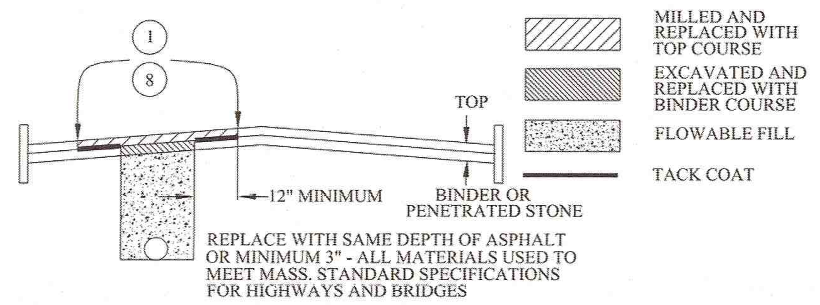

NOTES:
1. SAW CUT OUTER EDGE OF UTILITY PATCH.
2. MILL TO REMOVE TOP COURSE.
3. LEAVE 12" MIN. LIP BETWEEN EDGE OF TOP AND EDGE OF BINDER COURSE.
4. AFTER TRENCH WORK COMPLETED, FILL AROUND PIPE TO BOTTOM.
5. REPLACE ONE LAYER OF BINDER.
6. TACK AREA OF MILLING.
7. REPLACE TOP COURSE.
8. SEAL EDGES OF UTILITY PATCH WITH HOT POURED RUBBERIZED ASPHALT SEALANT.
   2-B SPECIFICATION FOR PATCHING BIT. CONC. ROADWAYS (CONT.)
9. STANDARD ENGINEERING DETAIL FROM CITY OF SPRINGFIELD DEPARTMENT OF PUBLIC WORKS.

CIT OF SPRINGFIELD TRENCH REPAIR SPECIFICATION RESIDENTIAL STREET
NOT TO SCALE
(7)

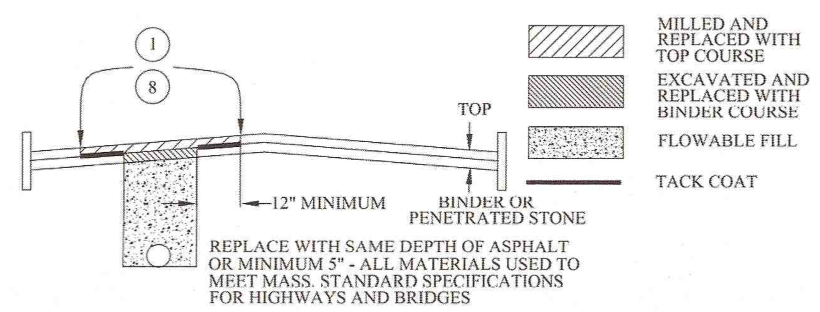

NOTES:
1. SAW CUT OUTER EDGE OF UTILITY PATCH.
2. MILL TO REMOVE TOP COURSE.
3. LEAVE 12" MIN. LIP BETWEEN EDGE OF TOP AND EDGE OF BINDER COURSE.
4. AFTER TRENCH WORK COMPLETED, FILL AROUND PIPE TO BOTTOM.
5. REPLACE ONE LAYER OF BINDER.
6. TACK AREA OF MILLING.
7. REPLACE TOP COURSE.
8. SEAL EDGES OF UTILITY PATCH WITH HOT POURED RUBBERIZED ASPHALT SEALANT.
   2-B SPECIFICATION FOR PATCHING BIT. CONC. ROADWAYS (CONT.)
9. STANDARD ENGINEERING DETAIL FROM CITY OF SPRINGFIELD DEPARTMENT OF PUBLIC WORKS.

CITY OF SPRINGFIELD TRENCH REPAIR SPECIFICATION ARTERIAL STREET
NOT TO SCALE
(8)

NOTE:
TACK COAT – PROVIDE EMULSIFIED ASPHALT WHICH CONFORMS TO THE REQUIREMENTS OF THE STATE SPECIFICATIONS, DILUTED WITH ONE PART WATER TO ONE ONE PART ASPHALT FOLLOWING AASHTO M140/ASTM D997, OR AASHTO M208/ASTM D2397, SS-1H, CSS-1, OR CSS-1H.

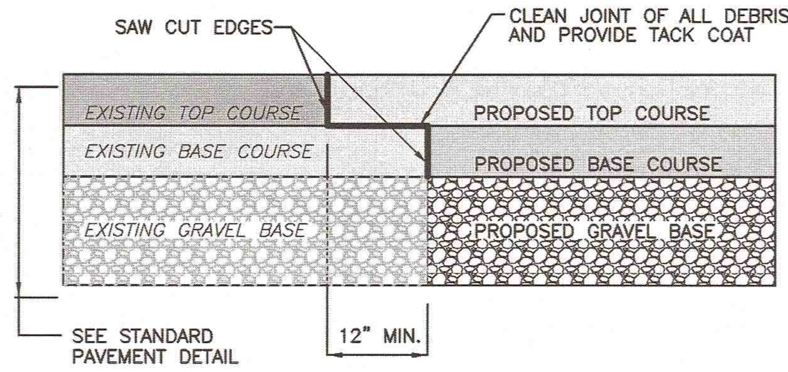

PAVEMENT KEY CUT DETAIL
NOT TO SCALE
(9)

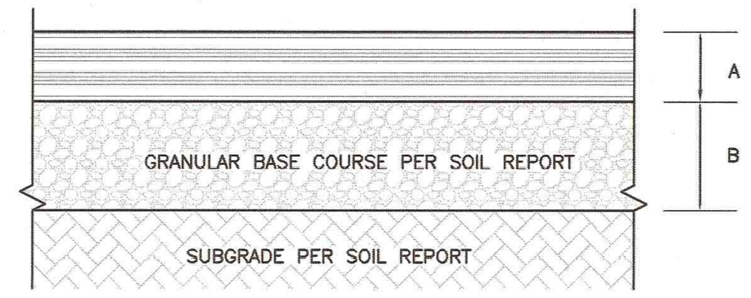

NOTES:

1. SURFACE COURSE, BASE, AND SUBGRADE SHALL BE PER GEOTECHNICAL ENGINEER'S RECOMMENDATIONS FOR LOCAL SOILS OR DRAINAGE CONDITIONS AND/OR METHODS.
2. SUBGRADE SHALL BE COMPACTED TO 95% OF PROCTOR.
3. COORDINATE PAVEMENT DETAIL WITH GOETECH & ENGINEER.

STANDARD DUTY PAVING
A = 1.5" ASPHALT CONCRETE – SURFACE COURSE (M3.11.03, TABLE A, TOP COURSE)
1.5" ASPHALT CONCRETE – BINDER COURSE (M3.11.03, TABLE A, BINDER COURSE)

B = 12" GRANULAR BASE COARSE – M1.03.1, PROCESSED GRAVEL FOR SUBBASE

HEAVY DUTY PAVING
A = 2" ASPHALT CONCRETE – SURFACE COURSE (M3.11.03, TABLE A, TOP COURSE)
2" ASPHALT CONCRETE – BINDER COURSE (M3.11.03, TABLE A, BINDER COURSE)

B = 12" GRANULAR BASE COARSE – M1.03.1, PROCESSED GRAVEL FOR SUBBASE

BITUMINOUS ROADWAY
NOT TO SCALE
(10)

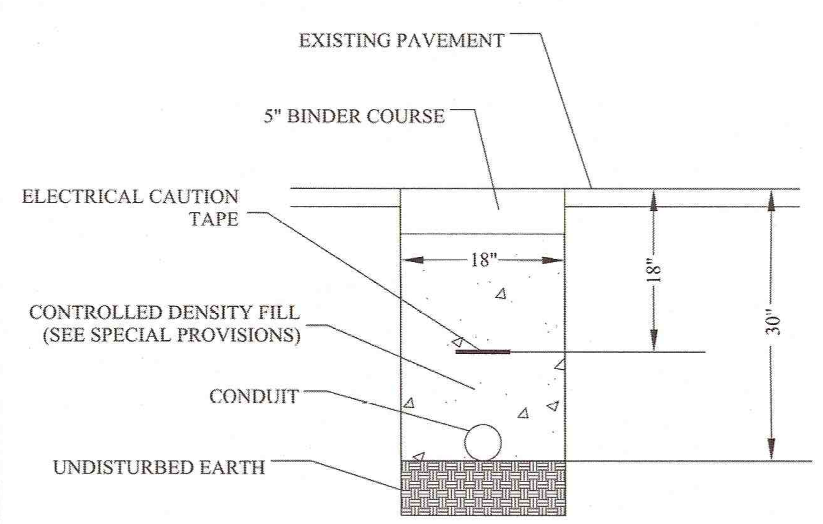

NOTES:
1. STANDARD ENGINEERING DETAIL FROM CITY OF SPRINGFIELD DEPARTMENT OF PUBLIC WORKS.

TRAFFIC SYMBOL CONDUIT TRENCH
NOT TO SCALE
(11)

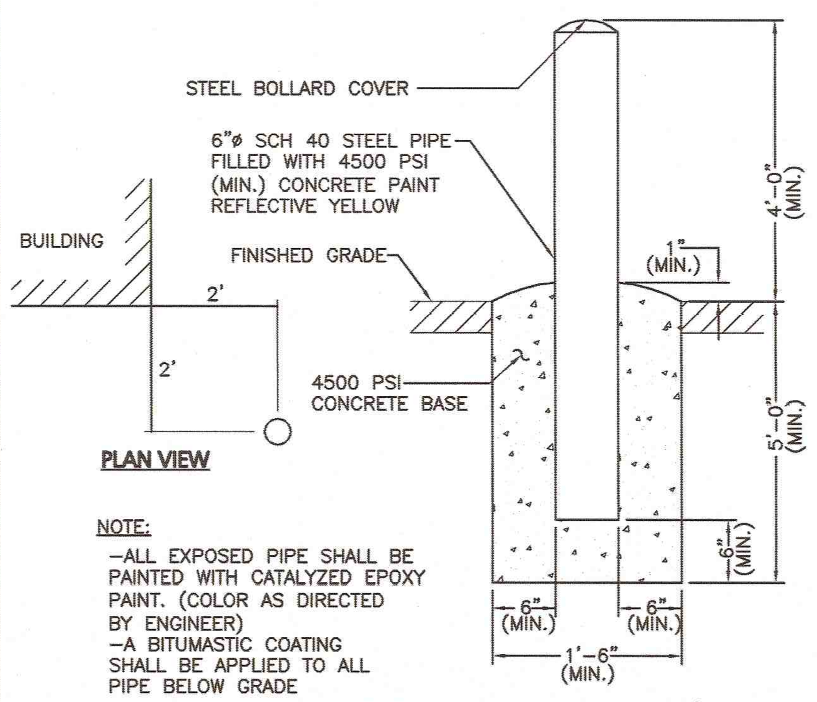

NOTE:
–ALL EXPOSED PIPE SHALL BE PAINTED WITH CATALYZED EPOXY PAINT. (COLOR AS DIRECTED BY ENGINEER)
–A BITUMASTIC COATING SHALL BE APPLIED TO ALL PIPE BELOW GRADE

FIXED BOLLARD
NOT TO SCALE
(12)

NOT USED
NOT TO SCALE
(13)

NOT USED
NOT TO SCALE
(14)

NOT USED
NOT TO SCALE
(15)

NOT USED
NOT TO SCALE
(16)

NOT USED
NOT TO SCALE
(17)

NOT USED
NOT TO SCALE
(18)

NOT USED
NOT TO SCALE
(19)

NOT USED
NOT TO SCALE
(20)

N:\PROJECTS\1839-02\CIVIL\DRAWINGS\CURRENT\C-1839-02 – DETAILS.DWG

ENGINEER:

ALLEN & MAJOR ASSOCIATES, INC.
civil & structural engineering ♦ land surveying
environmental consulting ♦ landscape architecture
www.allenmajor.com
100 COMMERCE WAY
P.O. BOX 2118
WOBURN MA 01888-0118
TEL: (781) 935-6889
FAX: (781) 935-2896
WOBURN, MA ♦ LAKEVILLE, MA ♦ MANCHESTER, NH

SEAL:

COMMONWEALTH OF MASSACHUSETTS
TIMOTHY J. WILLIAMS
CIVIL
No.43119
REGISTERED PROFESSIONAL ENGINEER
10/23/15

CONSULTANT:

OWNER:

MGM RESORTS INTERNATIONAL™
3260 Industrial Road, Las Vegas,NV 89109
702.692.9622 Phone 702.862.1750 Fax

MGM SPRINGFIELD
SPRINGFIELD, MA

PROJECT:
MGM SPRINGFIELD - SITE/CIVIL RECORD

REVISIONS:

NO.	DATE	ISSUE
1	10/23/15	SITE PLAN APPROVAL

THIS DRAWING HAS BEEN PREPARED IN ELECTRONIC FORMAT. CLIENT/CLIENT'S REPRESENTATIVE OR CONSULTANT MAY BE PROVIDED COPIES OF DRAWINGS AND SPECIFICATIONS ON MAGNETIC MEDIA FOR HIS/HER INFORMATION AND USE FOR SPECIFIC APPLICATION TO THIS PROJECT. DUE TO THE POTENTIAL THAT THE MAGNETIC INFORMATION MAY BE MODIFIED UNINTENTIONALLY OR OTHERWISE, ALLEN & MAJOR ASSOCIATES, INC. MAY REMOVE ALL INDICATION OF THE DOCUMENT'S AUTHORSHIP ON THE MAGNETIC MEDIA. PRINTED REPRESENTATIONS OF THE DRAWINGS AND SPECIFICATIONS ISSUED SHALL BE THE ONLY RECORD COPIES OF ALLEN & MAJOR ASSOCIATES, INC.'S WORK PRODUCT.

Copyright 2015 Allen & Major Associates, Inc.
All Rights Reserved

DRAWING TITLE:

DETAILS
STREET, UTILITY,
& HARDSCAPE

All dimensions, levels, layouts and field conditions shall be verified at the site by the contractor before proceeding with the work.

MRID Project No.	58012MASS
Consultant Project No.	1839-02D
Date:	08/14/2015

Drawn By	Checked By	Approved By
KEA	TJW	TJW

File Name: C1839-02D

D-2

DESC.	SIGN	SIZE	MOUNTING HEIGHT	DESCRIPTION	REFLEC-TORIZED
R1-1	STOP	30" x 30"	7' - 0"	WHITE ON RED	YES
R7-8M (MODIFIED)	VAN ACCESSIBLE	12" x 20"	7' - 0"	GREEN & BLUE ON WHITE	NO
R7-8	ACCESSIBLE PARKING	12" x 20"	7' - 0"	GREEN & BLUE ON WHITE	NO
R5-1	DO NOT ENTER	30" X 30"	7' - 0"	RED ON WHITE	YES

1. TRAFFIC AND SAFETY SIGNAGE SHALL COMPLY WITH MUTCD STANDARDS.
2. MOUNTING HEIGHT IS DEFINED AS THE DISTANCE FROM THE BOTTOM OF THE SIGN TO THE NEAR EDGE OF THE PAVEMENT.

SIGN TABLE
NOT TO SCALE — 1

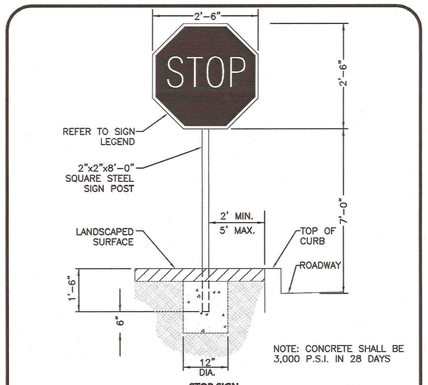

NOTE: CONCRETE SHALL BE 3,000 P.S.I. IN 28 DAYS

STOP SIGN
NOT TO SCALE — 2

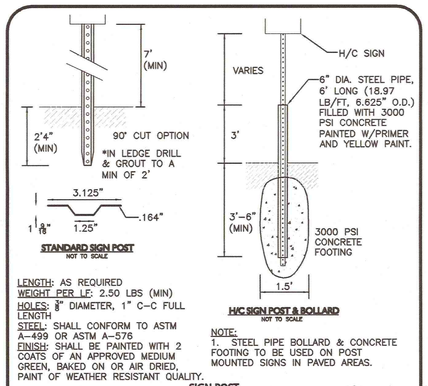

STANDARD SIGN POST
NOT TO SCALE

H/C SIGN POST & BOLLARD
NOT TO SCALE

LENGTH: AS REQUIRED
WEIGHT PER LF: 2.50 LBS (MIN)
HOLES: 3/4" DIAMETER, 1" C-C FULL LENGTH
STEEL: SHALL CONFORM TO ASTM A-499 OR ASTM A-576
FINISH: SHALL BE PAINTED WITH 2 COATS OF AN APPROVED MEDIUM GREEN, BAKED ON OR AIR DRIED, PAINT OF WEATHER RESISTANT QUALITY.

NOTE:
1. STEEL PIPE BOLLARD & CONCRETE FOOTING TO BE USED ON POST MOUNTED SIGNS IN PAVED AREAS.

SIGN POST
NOT TO SCALE — 3

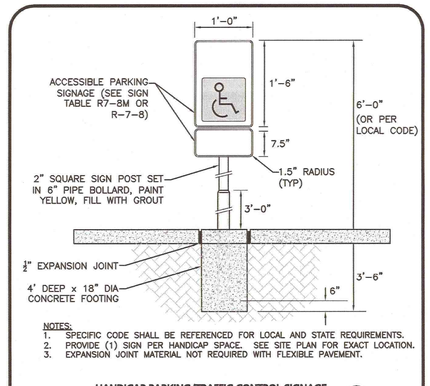

NOTES:
1. SPECIFIC CODE SHALL BE REFERENCED FOR LOCAL AND STATE REQUIREMENTS.
2. PROVIDE (1) SIGN PER HANDICAP SPACE. SEE SITE PLAN FOR EXACT LOCATION.
3. EXPANSION JOINT MATERIAL NOT REQUIRED WITH FLEXIBLE PAVEMENT.

HANDICAP PARKING/TRAFFIC CONTROL SIGNAGE
NOT TO SCALE — 4

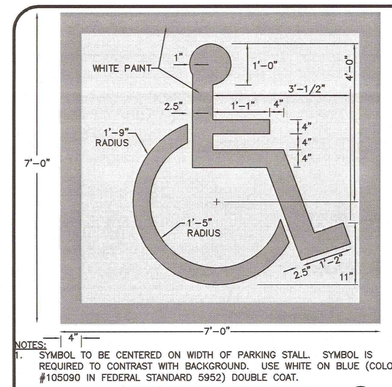

NOTES:
1. SYMBOL TO BE CENTERED ON WIDTH OF PARKING STALL. SYMBOL IS REQUIRED TO CONTRAST WITH BACKGROUND. USE WHITE ON BLUE (COLOR #105090 IN FEDERAL STANDARD 5952) DOUBLE COAT.

TYPICAL PAINTED HANDICAPPED SYMBOL
NOT TO SCALE — 5

NOT USED
NOT TO SCALE — 6

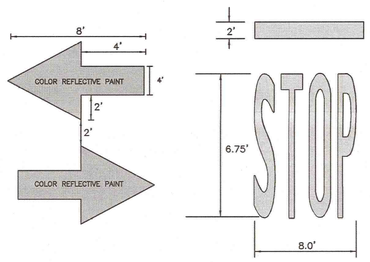

WHITE THERMOPLASTIC LETTERING / ARROWS
NOT TO SCALE — 7

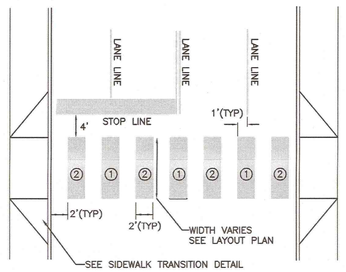

NOTE:
① LANE LINE STRIP: THIS IS LOCATED IN THE LINE WITH EACH LANE LINE AND HALF THE STRIP ON EACH SIDE.
② MID LINE STRIP: THIS IS LOCATED MIDWAY BETWEEN EACH LANE LINE STRIP.

CROSSWALK STRIPING
NOT TO SCALE — 8

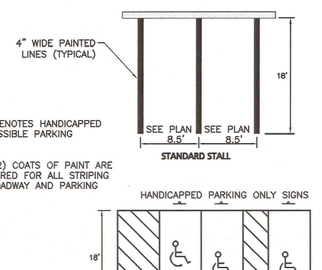

NOTE:
1. "V" DENOTES HANDICAPPED ACCESSIBLE PARKING SPACE.
2. TWO(2) COATS OF PAINT ARE REQUIRED FOR ALL STRIPING IN ROADWAY AND PARKING LOTS.

STANDARD STALL

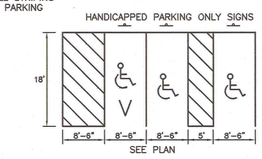

STANDARD AND VAN ACCESSIBLE HANDICAPPED PARKING SPACE

HANDICAPPED AND STANDARD STALL
NOT TO SCALE — 9

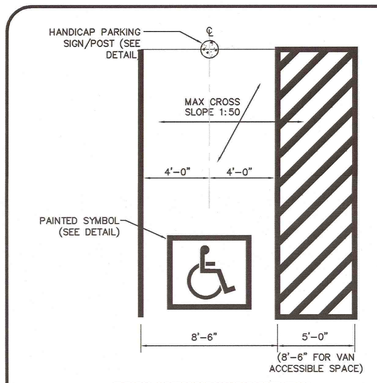

TYPICAL ACCESSIBLE HANDICAPPED STALL
NOT TO SCALE — 10

NOT USED
NOT TO SCALE — 11

NOT USED
NOT TO SCALE — 12

NOT USED
NOT TO SCALE — 13

NOT USED
NOT TO SCALE — 14

NOT USED
NOT TO SCALE — 15

NOT USED
NOT TO SCALE — 16

NOT USED
NOT TO SCALE — 17

NOT USED
NOT TO SCALE — 18

NOT USED
NOT TO SCALE — 19

NOT USED
NOT TO SCALE — 20

N:\PROJECTS\1839-02\CIVIL\DRAWINGS\CURRENT\C-1839-02 - DETAILS.DWG

ENGINEER:
ALLEN & MAJOR ASSOCIATES, INC.
civil & structural engineering • land surveying
100 COMMERCE WAY
WOBURN, MA 01801-1087
TEL (781) 935-6889
FAX (781) 935-2896
WOBURN, MA • LAKEVILLE, CT • WORCESTER, MA

SEAL:
COMMONWEALTH OF MASSACHUSETTS
TIMOTHY J. WILLIAMS
CIVIL
No.43119
REGISTERED PROFESSIONAL ENGINEER
10/23/15

CONSULTANT:

OWNER:
MGM RESORTS INTERNATIONAL
3260 Industrial Road, Las Vegas,NV 89109
702.692.9622 Phone 702.862.1750 Fax

SPRINGFIELD
SPRINGFIELD, MA
MGM SPRINGFIELD

PROJECT:
MGM SPRINGFIELD - SITE/CIVIL RECORD

REVISIONS:

NO.	DATE	ISSUE
1	10/23/15	SITE PLAN APPROVAL

THIS DRAWING HAS BEEN PREPARED IN ELECTRONIC FORMAT. CLIENT/CLIENT'S REPRESENTATIVE OR CONSULTANT MAY BE PROVIDED WITH ELECTRONIC COPIES OF DRAWINGS OR MAGNETIC MEDIA FOR VARIOUS INFORMATION AND CO-ORDINATION APPLICATION TO THIS PROJECT. DUE TO THE POTENTIAL THAT THE MAGNETIC INFORMATION MAY BE MODIFIED UNINTENTIONALLY OR OTHERWISE, ALLEN & MAJOR ASSOCIATES, INC. MAY REMOVE ALL REFERENCES TO ITSELF AND ITS CONSULTANTS FROM ELECTRONIC MEDIA. PRINTED REPRODUCTIONS OF THE DRAWINGS AND SPECIFICATIONS ISSUED SHALL BE THE ONLY RECORD COPIES OF ALLEN & MAJOR ASSOCIATES, INC.'S WORK PRODUCT.

Copyright 2015 Allen & Major Associates, Inc.
All Rights Reserved

DRAWING TITLE:
DETAILS
PAVEMENT
MARKINGS &
SIGNAGE DETAILS

All dimensions, levels, layouts and field conditions shall be verified at the site by the contractor before proceeding with the work.

MRID Project No.	58012MASS
Consultant Project No.	1839-02D
Date:	08/14/2015

Drawn By	Checked By	Approved By
KEA	TJW	TJW

File Name: C1839-02D

D-3

VORTECHS MODEL 9000 (Detail 1)

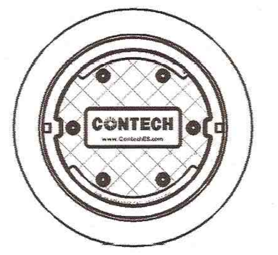

FRAME AND COVER
DIAMETER VARIES (NTS)

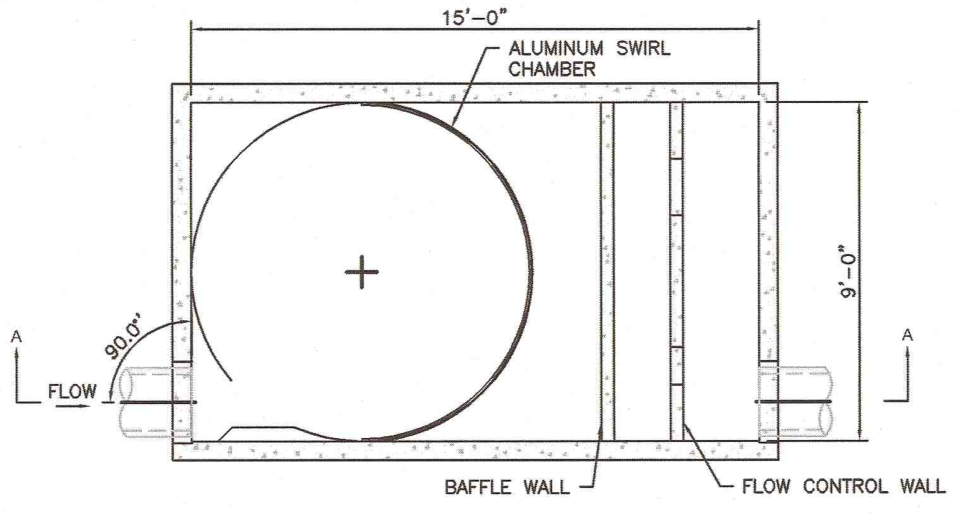

SECTION B-B
NOT TO SCALE

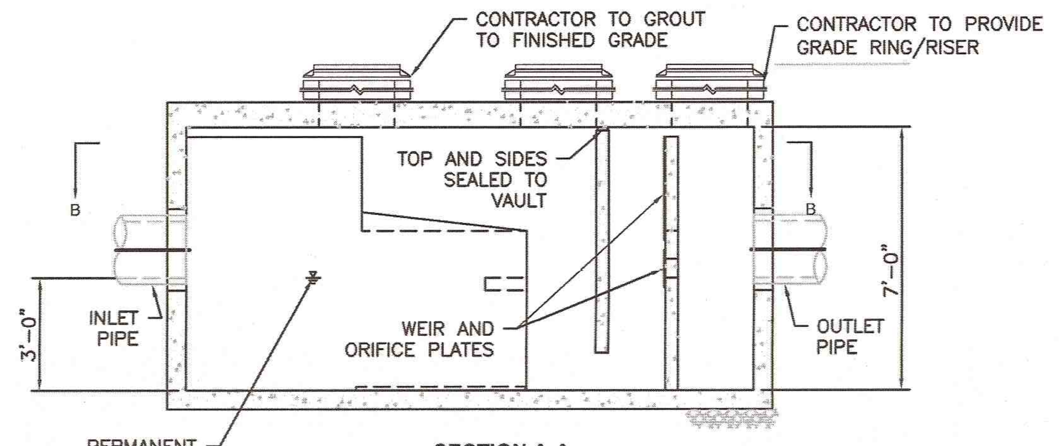

SECTION A-A
NOT TO SCALE

GENERAL NOTES
1. CONTECH TO PROVIDE ALL MATERIALS UNLESS NOTED OTHERWISE.
2. DIMENSIONS MARKED WITH ( ) ARE REFERENCE DIMENSIONS. ACTUAL DIMENSIONS MAY VARY.
3. FOR FABRICATION DRAWINGS WITH DETAILED STRUCTURE DIMENSIONS AND WEIGHT, PLEASE CONTACT YOUR CONTECH REPRESENTATIVE. www.ContechES.com
4. VORTECHS WATER QUALITY STRUCTURE SHALL BE IN ACCORDANCE WITH ALL DESIGN DATA AND INFORMATION CONTAINED IN THIS DRAWING.
5. STRUCTURE SHALL MEET AASHTO HS20 AND CASTINGS SHALL MEET AASHTO M306 LOAD RATING, ASSUMING GROUNDWATER ELEVATION AT, OR BELOW, THE OUTLET PIPE INVERT ELEVATION. ENGINEER OF RECORD TO CONFIRM ACTUAL GROUNDWATER ELEVATION.
6. INLET PIPE(S) MUST BE PERPEDICULAR TO THE VAULT AND AT THE CORNER TO INTRODUCE THE FLOW TANGENTIALLY TO THE SWIRL CHAMBER. DUAL INLETS NOT TO HAVE OPPOSING TANGENTIAL FLOW DIRECTIONS.
7. OUTLET PIPE(S) MUST BE DOWN STREAM OF THE FLOW CONTROL BAFFLE AND MAY BE LOCATED ON THE SIDE OR END OF THE VAULT. THE FLOW CONTROL WALL MAY BE TURNED TO ACCOMODATE OUTLET PIPE KNOCKOUTS ON THE SIDE OF THE VAULT.

INSTALLATION NOTES
A. ANY SUB–BASE, BACKFILL DEPTH, AND/OR ANTI–FLOTATION PROVISIONS ARE SITE–SPECIFIC DESIGN CONSIDERATIONS AND SHALL BE SPECIFIED BY ENGINEER OF RECORD.
B. CONTRACTOR TO PROVIDE EQUIPMENT WITH SUFFICIENT LIFTING AND REACH CAPACITY TO LIFT AND SET THE VORTECHS STRUCTURE (LIFTING CLUTCHES PROVIDED).
C. CONTRACTOR TO INSTALL JOINT SEALANT BETWEEN ALL STRUCTURE SECTIONS AND ASSEMBLE STRUCTURE.
D. CONTRACTOR TO PROVIDE, INSTALL, AND GROUT PIPES. MATCH PIPE INVERTS WITH ELEVATIONS SHOWN.
E. CONTRACTOR TO TAKE APPROPRIATE MEASURES TO ASSURE UNIT IS WATER TIGHT, HOLDING WATER TO FLOWLINE INVERT MINIMUM. IT IS SUGGESTED THAT ALL JOINTS BELOW PIPE INVERTS ARE GROUTED.

THIS PRODUCT MAY BE PROTECTED BY THE FOLLOWING U.S. PATENT: 5,759,415; RELATED FOREIGN PATENTS.

CONTECH ENGINEERED SOLUTIONS LLC

VORTECHS MODEL 9000 (1)
(OR APPROVED EQUAL)

PROPRIETARY SEPARATORS - HIGH EFFICIENCY CDS (Detail 2)

GENERAL NOTES
1. CONTECH TO PROVIDE ALL MATERIALS UNLESS NOTED OTHERWISE.
2. DIMENSIONS MARKED WITH ( ) ARE REFERENCE DIMENSIONS. ACTUAL DIMENSIONS MAY VARY.
3. FOR FABRICATION DRAWINGS WITH DETAILED STRUCTURE DIMENSIONS AND WEIGHTS, PLEASE CONTACT YOUR CONTECH CONSTRUCTION PRODUCTS REPRESENTATIVE. www.contech–cpi.com
4. CDS WATER QUALITY STRUCTURE SHALL BE IN ACCORDANCE WITH ALL DESIGN DATA AND INFORMATION CONTAINED IN THIS DRAWING.
5. STRUCTURE SHALL MEET AASHTO HS20 AND CASTINGS SHALL MEET AASHTO M306 LOAD RATING, ASSUMING GROUNDWATER ELEVATION AT, OR BELOW, THE OUTLET PIPE INVERT ELEVATION. ENGINEER OF RECORD TO CONFIRM ACTUAL GROUNDWATER ELEVATION.
6. PVC HYDRAULIC SHEAR PLATE IS PLACED ON SHELF AT BOTTOM OF SCREEN CYLINDER. REMOVE AND REPLACE AS NECESSARY DURING MAINTENANCE CLEANING.

INSTALLATION NOTES
1. ANY SUB–BASE, BACKFILL DEPTH, AND/OR ANTI–FLOTATION PROVISIONS ARE SITE–SPECIFIC DESIGN CONSIDERATIONS AND SHALL BE SPECIFIED BY ENGINEER OF RECORD.
2. CONTRACTOR TO PROVIDE EQUIPMENT WITH SUFFICIENT LIFTING AND REACH CAPACITY TO LIFT AND SET THE CDS MANHOLE STRUCTURE (LIFTING CLUTCHES PROVIDED).
3. CONTRACTOR TO ADD JOINT SEALANT BETWEEN ALL STRUCTURE SECTIONS, AND ASSEMBLE STRUCTURE.
4. CONTRACTOR TO PROVIDE, INSTALL, AND GROUT PIPES. MATCH PIPE INVERTS WITH ELEVATIONS SHOWN.
5. CONTRACTOR TO TAKE APPROPRIATE MEASURES TO ASSURE UNIT IS WATER TIGHT, HOLDING WATER TO FLOWLINE INVERT MINIMUM. IT IS SUGGESTED THAT ALL JOINTS BELOW PIPE INVERTS ARE GROUTED.

CDS — THIS PRODUCT MAY BE PROTECTED BY ONE OR MORE OF THE FOLLOWING U.S. PATENTS: 5,788,848; 6,641,720; 6,511,595; 6,581,783; RELATED FOREIGN PATENTS, OR OTHER PATENTS PENDING.

CONTECH STORMWATER SOLUTIONS contechstormwater.com

FRAME AND COVER
DIAMETER VARIES (NTS)

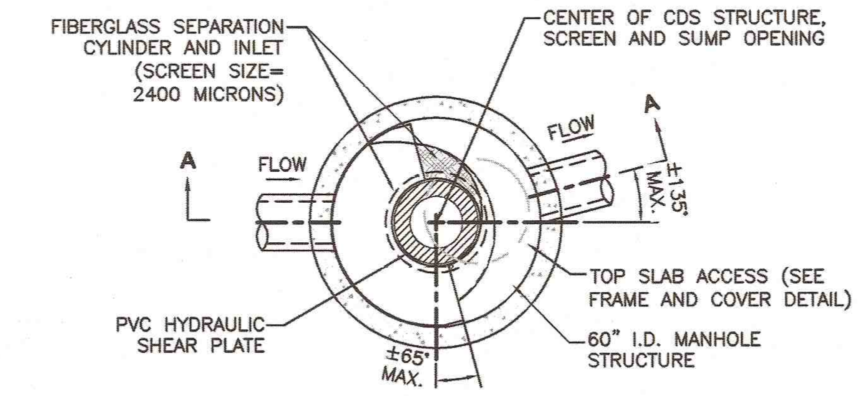

PLAN VIEW
NOT TO SCALE

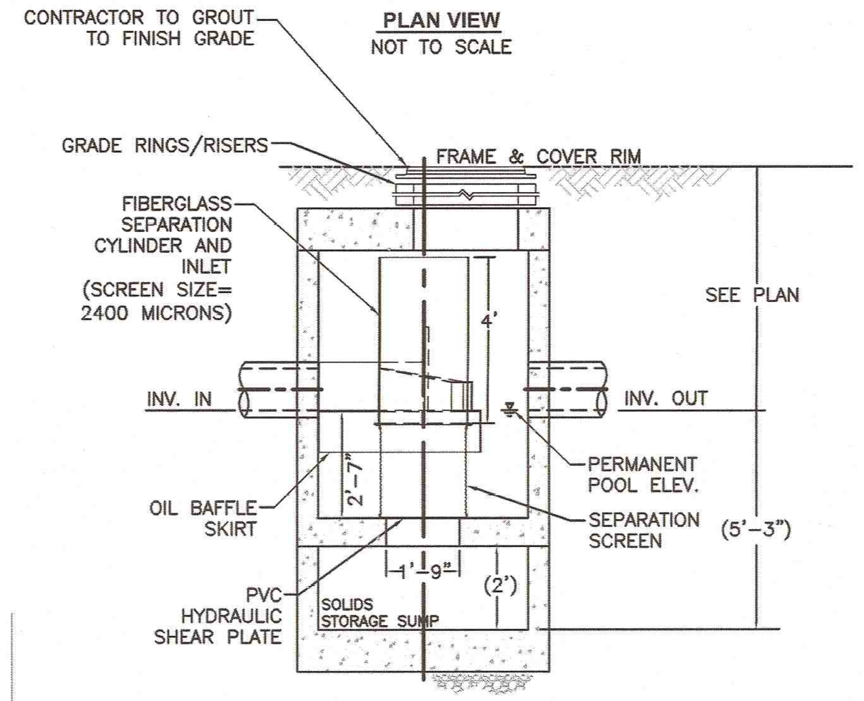

SECTION A-A
NOT TO SCALE

HIGH EFFICIENCY CDS2025-5-C
(OR APPROVED EQUAL)

PROPRIETARY SEPARATORS - HIGH EFFICIENCY CDS (2)
(OR APPROVED EQUAL)

AREA DRAINS (AD) AND DRAIN CLEANOUTS (CO) (Detail 3)

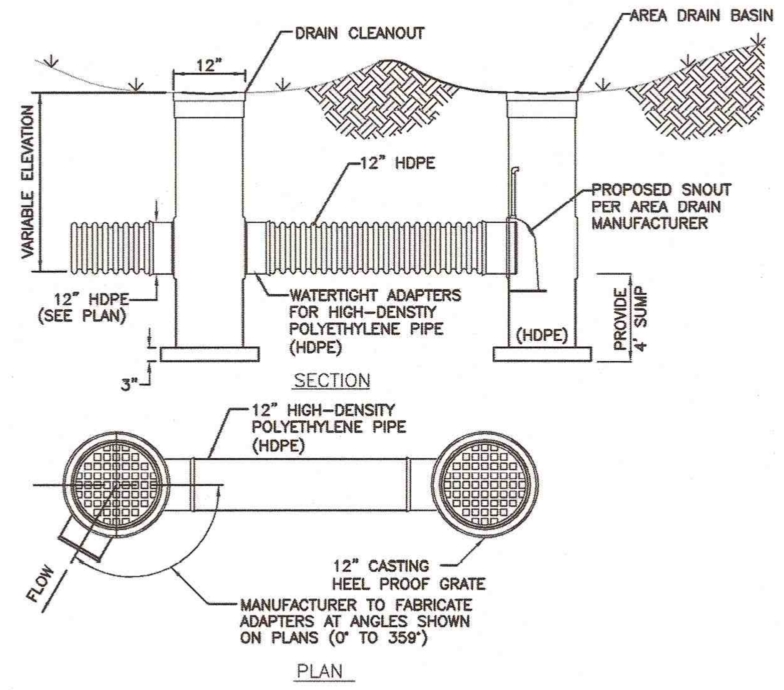

NOTES:
1. AREA DRAINS (AD) AND DRAIN CLEANOUTS (CO) SHALL BE HEAVY DUTY PVC (12" DIA.).
2. AREA DRAIN GRATES AND CLEANOUT SOLID COVERS SHALL BE HEAVY DUTY RATED H–20.
3. WATER–TIGHT CONNECTIONS SHALL MEET ASTM 3212 FOR POLYETHYLENE PIPE.
4. ALL COMPONENTS SHALL BE AS MANUFACTURED BY NYOPLAST U.S.A., INC. (770–932–2443) OR APPROVED EQUAL.

AREA DRAINS (AD) AND DRAIN CLEANOUTS (CO) (3)
NOT TO SCALE

VORTSENTRY (VS) HS 36 (Detail 4)

VORTSENTRY HS GENERAL INFORMATION									
Model	Manhole Diameter (ID)	Total Treatment Flow Rate		Typical Total Distance Rim to Outside Bottom A	Typical Distance Rim to Invert B	Typical Depth Below Invert (inside) C	Approximate Minimum Distance Rim to Invert	Maximum Pipe Diameter (ID)
	FT	CFS	L/S	FT	FT	FT	FT	IN
HS36	3	0.55	15.6	10.16	4.08	5.58	3.00	18

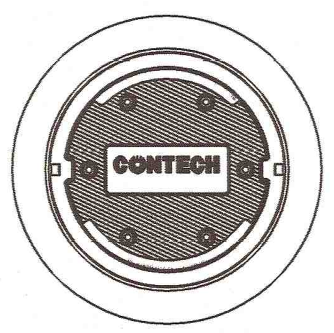

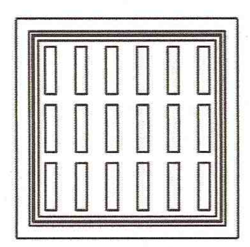

FRAME AND COVER
(DIAMETER VARIES)
N.T.S.

FRAME AND GRATE
(24" SQUARE)
N.T.S.

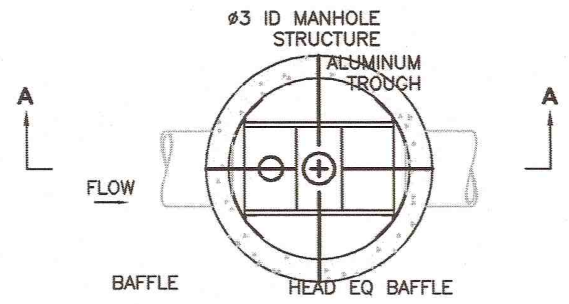

SECTION B-B
NOT TO SCALE

GENERAL NOTES
1. CONTECH TO PROVIDE ALL MATERIALS UNLESS NOTED OTHERWISE.
2. DIMENSIONS MARKED WITH ( ) ARE REFERENCE DIMENSIONS. ACTUAL DIMENSIONS MAY VARY.
3. FOR FABRICATION DRAWINGS WITH DETAILED STRUCTURE DIMENSIONS AND WEIGHT, PLEASE CONTACT YOUR CONTECH ENGINEERED SOLUTIONS LLC REPRESENTATIVE. www.ContechES.com
4. VORTSENTRY HS WATER QUALITY STRUCTURE SHALL BE IN ACCORDANCE WITH ALL DESIGN DATA AND INFORMATION CONTAINED IN THIS DRAWING.
5. STRUCTURE SHALL MEET AASHTO HS20 AND CASTINGS SHALL MEET AASHTO M306 LOAD RATING, ASSUMING GROUNDWATER ELEVATION AT, OR BELOW, THE OUTLET PIPE INVERT ELEVATION. ENGINEER OF RECORD TO CONFIRM ACTUAL GROUNDWATER ELEVATION.

INSTALLATION NOTES
1. ANY SUB–BASE, BACKFILL DEPTH, AND/OR ANTI–FLOTATION PROVISIONS ARE SITE–SPECIFIC DESIGN CONSIDERATIONS AND SHALL BE SPECIFIED BY ENGINEER OF RECORD.
2. CONTRACTOR TO PROVIDE EQUIPMENT WITH SUFFICIENT LIFTING AND REACH CAPACITY TO LIFT AND SET THE VORTSENTRY HS MANHOLE STRUCTURE (LIFTING CLUTCHES PROVIDED).
3. CONTRACTOR TO INSTALL JOINT SEALANT BETWEEN ALL STRUCTURE SECTIONS AND ASSEMBLE STRUCTURE.
4. CONTRACTOR TO PROVIDE, INSTALL, AND GROUT PIPES. MATCH PIPE INVERTS WITH ELEVATIONS SHOWN.
5. CONTRACTOR TO TAKE APPROPRIATE MEASURES TO ASSURE UNIT IS WATER TIGHT, HOLDING WATER TO FLOWLINE INVERT MINIMUM. IT IS SUGGESTED THAT ALL JOINTS BELOW PIPE INVERTS ARE GROUTED.

VORTSENTRY®
THIS PRODUCT MAY BE PROTECTED BY ONE OR MORE OF THE FOLLOWING U.S. PATENTS: 6,991,114; 7,296,692; RELATED FOREIGN PATENTS, OR OTHER PATENTS PENDING.

CONTECH ENGINEERED SOLUTIONS LLC

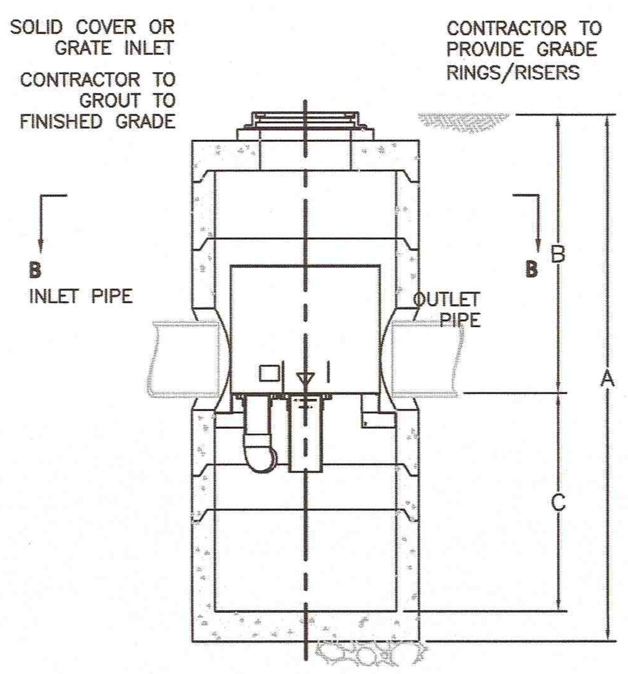

SECTION B-B
NOT TO SCALE

VORTSENTRY (VS) HS 36 (4)
(OR APPROVED EQUAL)

SPECIFICATIONS FOR STORAGE TANK

GENERAL:

1. THE TANK SHALL BE CONSTRUCTED OF PRECAST REINFORCED CONCRETE; WATERTIGHT AND ABLE TO WITHSTAND H20 LOADING. THE TANK MAY BE SEGMENTAL PROVIDED THE JOINTS ARE WATERTIGHT.

2. CONCRETE SHALL HAVE A MINIMUM COMPRESSIVE STRENGTH OF 4,000 PSI @ 28 DAYS AND A MINIMUM DENSITY OF 140 PCF.

3. CEMENT SHALL BE PORTLAND TYPE 1 OR 3 PER ASTM C150–81.

4. ADMIXTURES SHALL CONFORM TO ASTM C233–82.

5. REINFORCING SHALL CONFORM TO ASTM A615 FOR WIRE FABRIC. GRADE 40/60 R'd OR EQUIVALENT.

6. THE MINIMUM WALL THICKNESS SHALL BE FOUR INCHES.

7. THE TANK SHALL BE EMBOSSED BY THE MANUFACTURER WITH A SEAL STATING THAT A QUALITY ASSURANCE PROGRAM IN CONFORMITY WITH ASTM STANDARD C 1227–96 HAS BEEN MET.

8. CONTRACTOR SHALL SUBMIT SHOP DRAWINGS TO ENGINEER FOR APPROVAL PRIOR TO PURCHASE AND INSTALLATION OF TANK AND COMPONENTS.

ACCESS MANHOLE:

1. THE STORAGE TANK SHALL BE EQUIPPED WITH ONE ACCESS MANHOLE AS SHOWN ON THE PLANS.

ASSEMBLY:

1. THE STORAGE TANK SHALL BE ASSEMBLED IN SUCH A MANNER THAT EACH SECTION IS LOWERED INTO PLACE, POSITIONED AND LEVELED BEFORE THE NEXT SECTION IS INSTALLED.

2. ALL JOINT SURFACES SHALL BE CLEAN PRIOR TO PLACING SEALER AND GASKET AND ASSEMBLY OF SUBSEQUENT SECTIONS.

3. EACH JOINT SHALL BE GUARANTEED WATERTIGHT AND SEALED WITH THE MANUFACTURE'S RECOMMENDED SEAL AND GASKET.

BASE COURSE:

1. THE SUBGRADE AREA BENEATH THE TANK SHALL BE MADE READY FOR PLACEMENT OF THE GRAVEL BASE COURSE BY REMOVAL OF ANY ORGANIC OR OTHERWISE UNSUITABLE SOILS AND MATERIALS.

2. THE BASE COURSE SHALL CONSIST OF TWO LEVEL COURSES OF GRAVEL FOR A TOTAL DEPTH OF 12", MECHANICALLY COMPACTED TO 95% OF MAXIMUM DRY DENSITY.

BACKFILL:

1. THE BACKFILL AROUND THE TANK SHALL CONSIST OF SAND, GRAVEL, OR SELECT COMMON FILL FREE OF ORGANIC DEBRIS, FROZEN EARTH OR STONES OR COBBLES OVER THREE INCHES IN SIZE.

2. ALL BACKFILL SHALL BE PROPERLY COMPACTED TO PREVENT SETTLEMENT AND CREATION OF VOIDS.

EPDM LINER:

1. A 24" WIDE, 15mm THICK ETHYLENE PROPYLENE DIENE MONOMER (EPDM) LINER SHALL BE ADHERED TO EACH TANK SEAM.
2. EPDM LINER SHALL PROVIDE 12" MINIMUM OVERLAP ON EACH SIDE OF THE TANK SEAMS.

PIPE PENETRATIONS:

1. ALL PIPE PENETRATIONS SHALL USE A KOR–N–SEAL WATERTIGHT GASKET (OR APPROVED EQUAL).

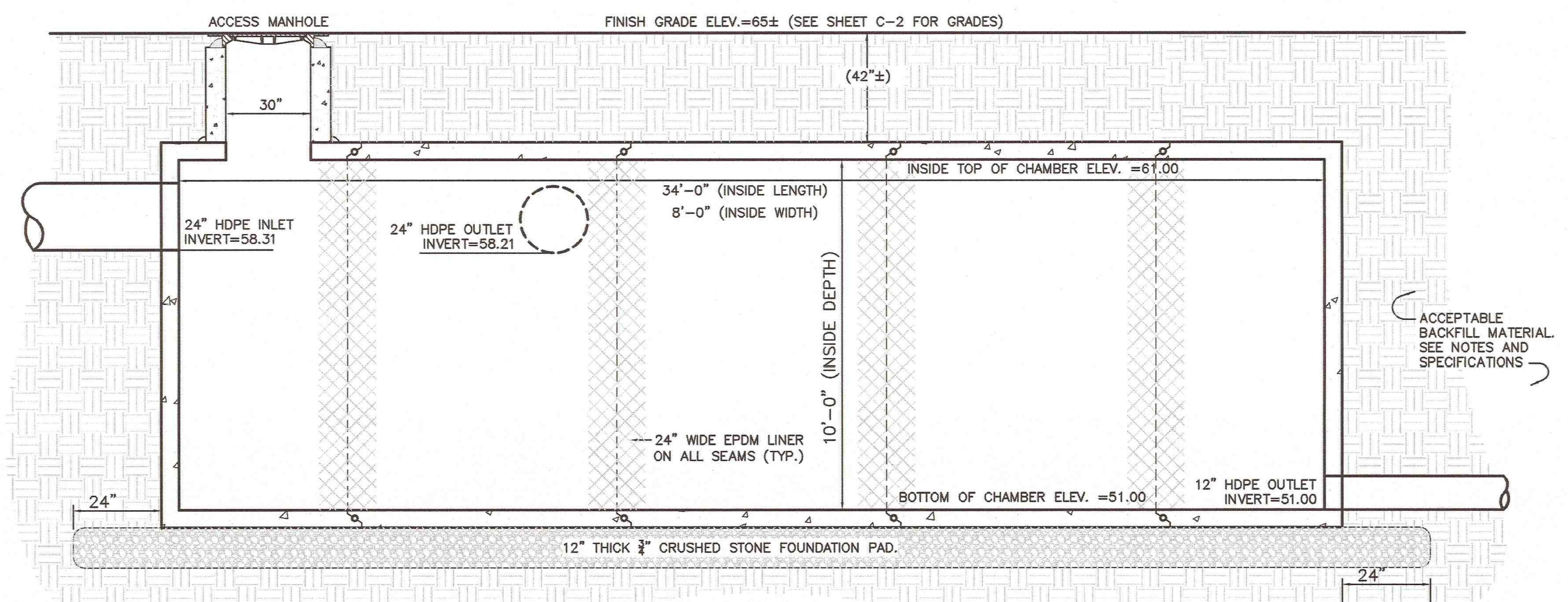

20,000 GALLON STORAGE TANK (5)
NOT TO SCALE

N:\PROJECTS\1839–02\CIVIL\DRAWINGS\CURRENT\C–1839–02 – DETAILS.DWG

ENGINEER:
ALLEN & MAJOR ASSOCIATES, INC.
civil & structural engineering ♦ land surveying
environmental consulting ♦ landscape architecture
www.allenmajor.com
100 COMMERCE WAY
P.O. BOX 2118
WOBURN MA 01888-0118
TEL: (781) 935-6889
FAX: (781) 935-2896
WOBURN, MA ♦ LAKEVILLE, MA ♦ MANCHESTER, NH

SEAL:
COMMONWEALTH OF MASSACHUSETTS — TIMOTHY J. WILLIAMS — CIVIL — No.43119 — REGISTERED PROFESSIONAL ENGINEER
10/23/15

CONSULTANT:

OWNER:
MGM RESORTS INTERNATIONAL™
3260 Industrial Road, Las Vegas,NV 89109
702.692.9622 Phone 702.862.1750 Fax

MGM SPRINGFIELD
SPRINGFIELD, MA

PROJECT:
MGM SPRINGFIELD - SITE/CIVIL RECORD

REVISIONS:

NO.	DATE	ISSUE
1	10/23/15	SITE PLAN APPROVAL

THIS DRAWING HAS BEEN PREPARED IN ELECTRONIC FORMAT. CLIENT/CLIENT'S REPRESENTATIVE OR CONSULTANT MAY BE PROVIDED COPIES OF DRAWINGS AND SPECIFICATIONS ON MAGNETIC MEDIA FOR HIS/HER INFORMATION AND USE FOR SPECIFIC APPLICATION TO THIS PROJECT. DUE TO THE POTENTIAL THAT THE MAGNETIC INFORMATION MAY BE MODIFIED UNINTENTIONALLY OR OTHERWISE, ALLEN & MAJOR ASSOCIATES, INC. MAY REMOVE ALL INDICATION OF THE DOCUMENT'S AUTHORSHIP ON THE MAGNETIC MEDIA. PRINTED REPRESENTATIONS OF THE DRAWINGS AND SPECIFICATIONS ISSUED SHALL BE THE ONLY RECORD COPIES OF ALLEN & MAJOR ASSOCIATES, INC.'S WORK PRODUCT.
Copyright 2015 Allen & Major Associates, Inc. All Rights Reserved

DRAWING TITLE:
DETAILS
DRAINAGE

All dimensions, levels, layouts and field conditions shall be verified at the site by the contractor before proceeding with the work.

MRID Project No.	58012MASS
Consultant Project No.	1839-02D
Date:	08/14/2015

Drawn By	Checked By	Approved By
KEA	TJW	TJW

File Name: C1839-02D

D-4

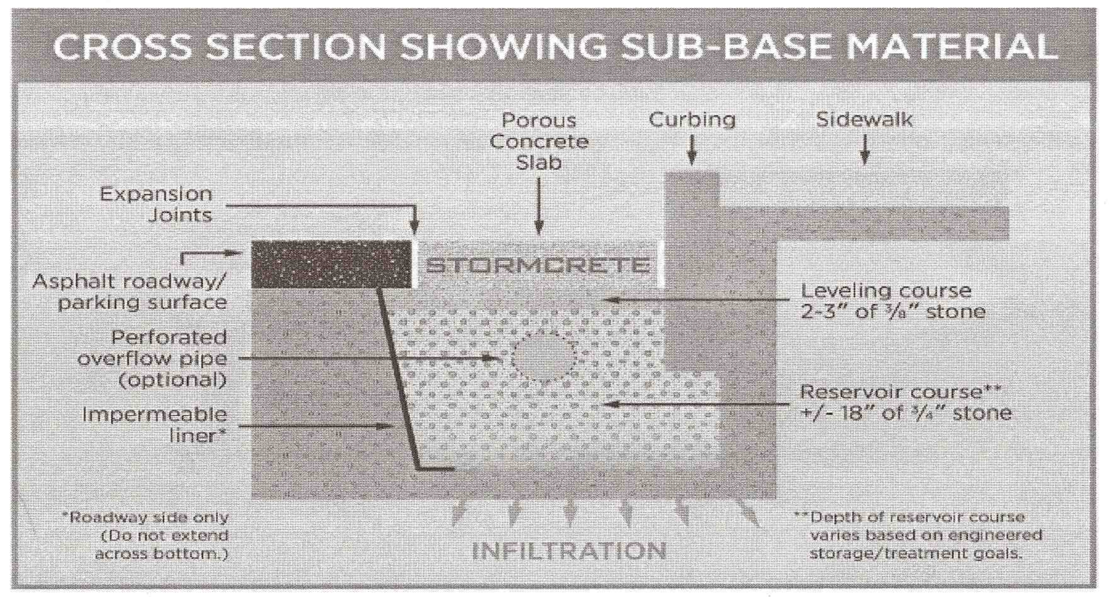

NOTES:
1. ALL COMPONENTS SHALL BE AS SPECIFIED AND/OR MANUFACTURED BY STORMCRETE (1-877-271-9055) OR APPROVED EQUAL.

STORMCRETE POROUS CONCRETE GUTTER PANEL (1)
NOT TO SCALE

MATERIAL LOCATION	DESCRIPTION	AASHTO M43 DESIGNATION	AASHTO M145 DESIGNATION	COMPACTION/DENSITY REQUIREMENT
Ⓓ FILL MATERIAL FROM 18" TO GRADE ABOVE CHAMBERS	ANY SOIL/ROCK MATERIALS, NATIVE SOILS OR PER ENGINEER'S PLANS. CHECK PLANS FOR PAVEMENT SUBGRADE REQUIREMENTS.	N/A	N/A	PREPARE PER ENGINEER'S PLANS. PAVED INSTALLATIONS MAY HAVE STRINGENT MATERIAL AND PREPARATION REQUIREMENTS.
Ⓒ FILL MATERIAL FOR 6" TO 18" ELEVATION ABOVE CHAMBERS (24" FOR UNPAVED INSTALLATIONS)	GRANULAR WELL-GRADED SOIL/AGGREGATE MIXTURES, <35% FINES.	3, 357, 4, 467, 5, 56, 57, 6, 67, 68, 7, 78, 8, 89, 9, 10	A-1 A-2 A-3	COMPACT IN 6" LIFTS TO A MINIMUM 95% STANDARD PROCTOR DENSITY. ROLLER GROSS VEHICLE WEIGHT NOT TO EXCEED 12,000 LBS. DYNAMIC FORCE NOT TO EXCEED 20,000 LBS.
Ⓑ EMBEDMENT STONE SURROUNDING AND TO A 6" ELEVATION ABOVE CHAMBERS	CLEAN ANGULAR STONE WITH THE MAJORITY OF PARTICLES BETWEEN ¾ - 2 INCH	3, 357, 4, 467, 5, 56, 57	N/A	NO COMPACTION REQUIRED
Ⓐ FOUNDATION STONE BELOW CHAMBERS	CLEAN ANGULAR STONE WITH THE MAJORITY OF PARTICLES BETWEEN ¾ - 2 INCH	3, 357, 4, 467, 5, 56, 57	N/A	PLATE COMPACT OR ROLL TO ACHIEVE A 95% STANDARD PROCTOR DENSITY

PLEASE NOTE: THE LISTED AASHTO DESIGNATIONS ARE FOR GRADATIONS ONLY. THE STONE MUST ALSO BE CLEAN CRUSHED ANGULAR. FOR EXAMPLE, THE STONE MUST BE SPECIFIED AS CLEAN, CRUSHED, ANGULAR NO. 4 STONE.

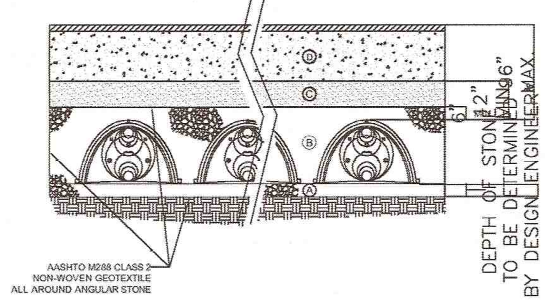

ACCEPTABLE FILL MATERIALS FOR STORMTECH CHAMBERS (2)
NOT TO SCALE

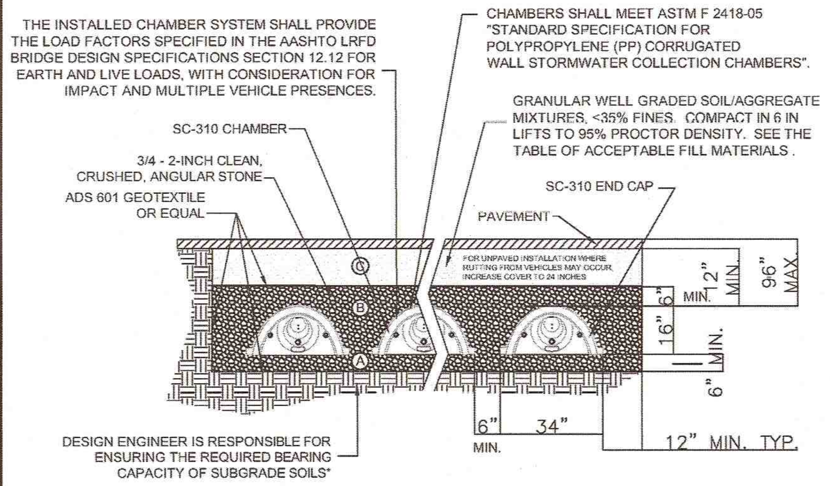

THIS CROSS SECTION DETAILS THE REQUIREMENTS NECESSARY TO SATISFY THE LOAD FACTORS SPECIFIED IN THE AASHTO LRFD BRIDGE DESIGN SPECIFICATIONS SECTION 12.12 FOR EARTH AND LIVE LOADS USING STORMTECH CHAMBERS

VENDOR INFORMATION:
STORMTECH
CALL 1-888-892-2694

STORMTECH SC-310 CHAMBER* CROSS SECTION (3)
NOT TO SCALE
*OR APPROVED EQUAL

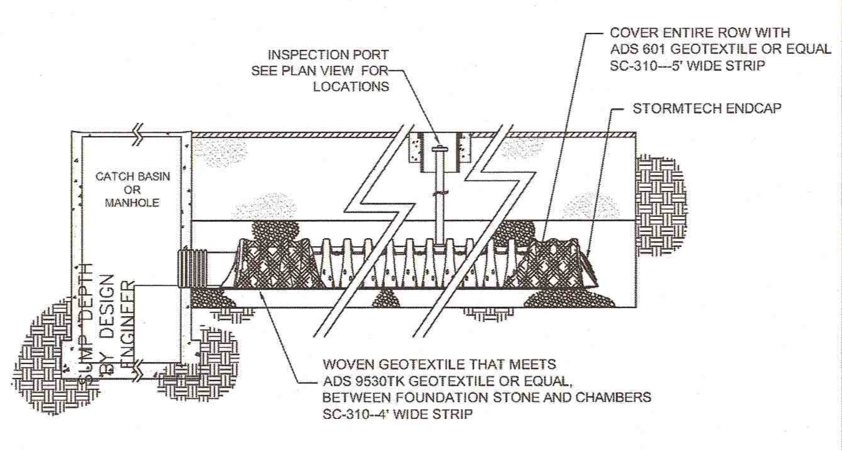

STORMTECH ISOLATOR ROW* (4)
NOT TO SCALE
*OR APPROVED EQUAL

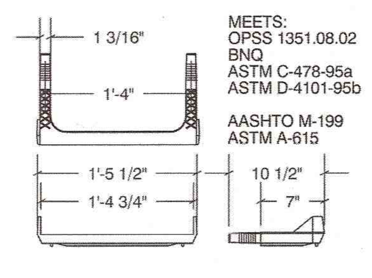

STAIR DETAIL

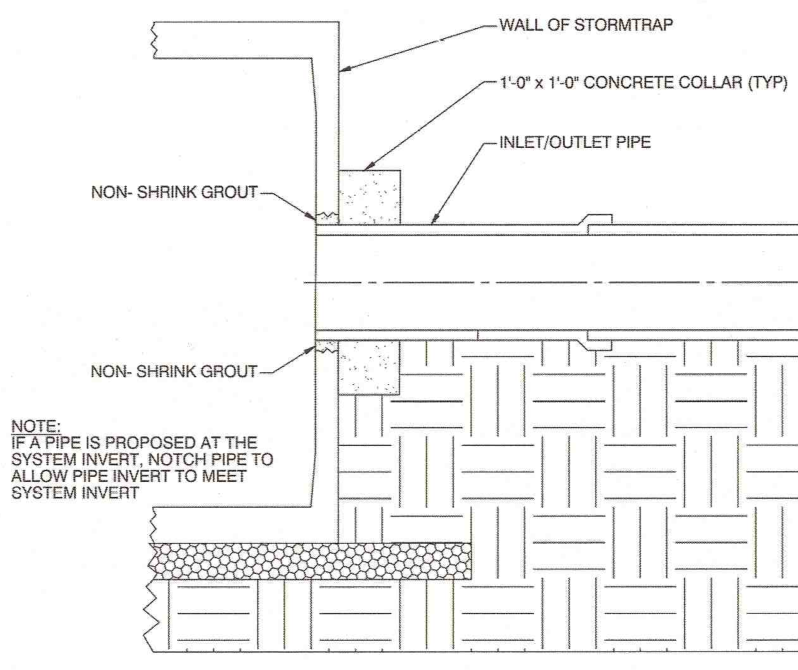

FOUNDATION
PIPE CONNECTION

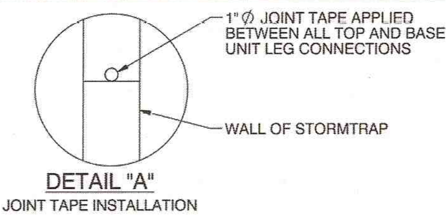

DETAIL "A"
JOINT TAPE INSTALLATION

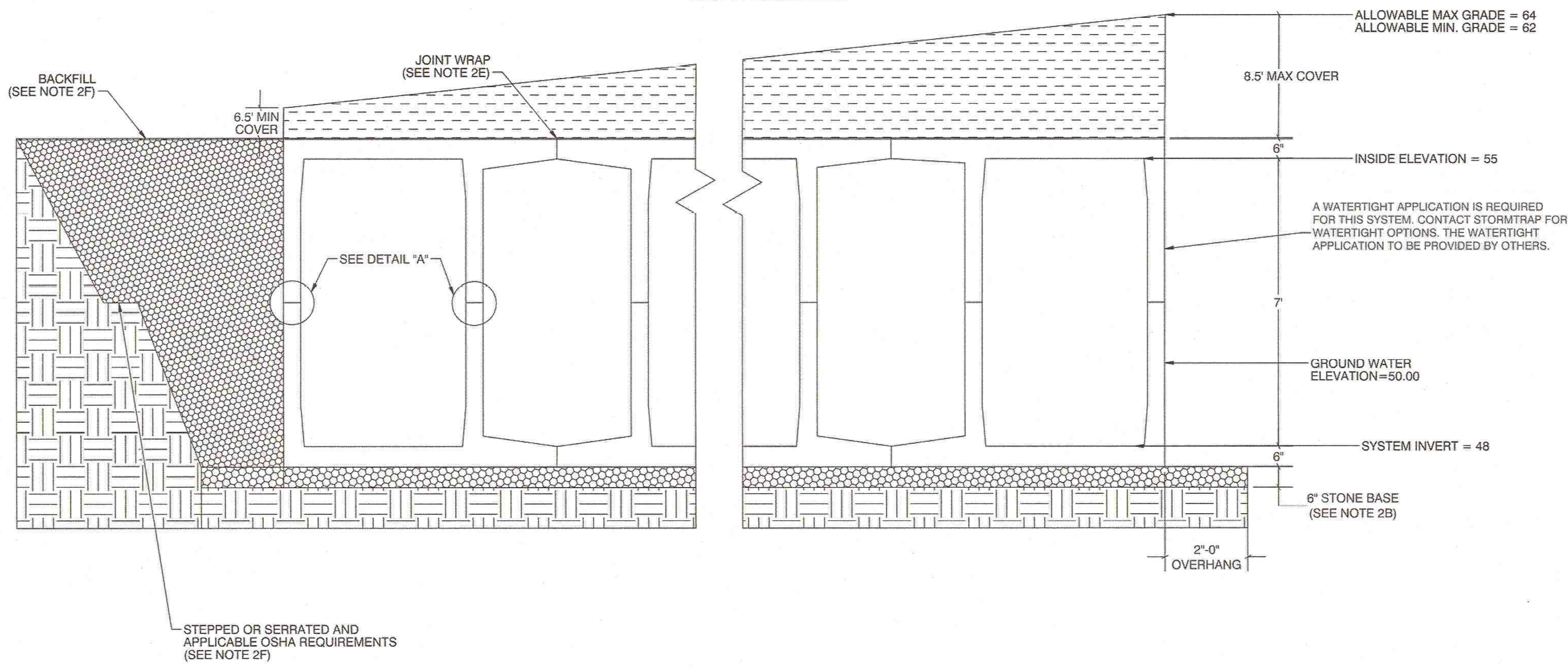

7'-0" DOUBLETRAP

*FOR STRUCTURAL & FLOTATION CALCULATIONS THE GROUND WATER TABLES ASSUMED TO BE AT ELEVATION 50.00. IF WATER TABLE IS DIFFERENT THAN ASSUMED, CONTACT STORMTRAP.

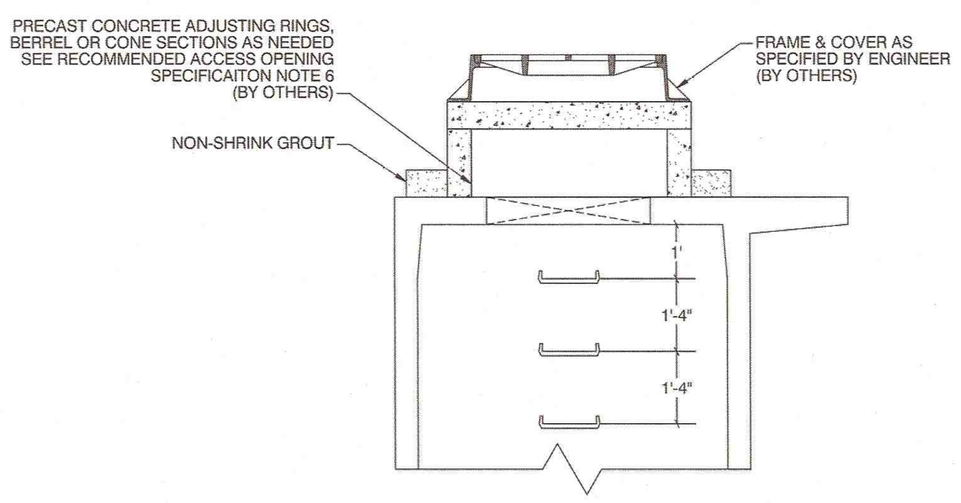

RISER / STAIR DETAIL

STORMTRAP® PRECAST CONCRETE MODULAR STORMWATER MANAGEMENT SYSTEMS
THIS STORMTRAP DESIGN MAY BE COVERED BY 1 OR MORE OF THE FOLLOWING U.S. PATENTS: NO. 6,991,402 B2, 7,160,058 B2, 7,344,335 B2
CA. PATENT NO. 2,445,609

STORMTRAP INSTALLATION SPECIFICATION

1. STORMTRAP MODULES SHALL BE MANUFACTURED ACCORDING TO SHOP DRAWINGS APPROVED BY THE INSTALLING CONTRACTOR AND ENGINEER. THE SHOP DRAWINGS SHALL INDICATE SIZE AND LOCATION OF ROOF OPENINGS AND INLET/ OUTLET PIPE OPENINGS.
2. STORMTRAP SHALL BE INSTALLED IN ACCORDANCE WITH ASTM C891-09, STANDARD PRACTICE FOR INSTALLATION OF UNDERGROUND PRECAST CONCRETE UTILITY STRUCTURES. THE FOLLOWING ADDITIONS AND/OR EXCEPTIONS SHALL APPLY:
   A. SPECIFICATIONS ON THE ENGINEER'S DRAWINGS SHALL TAKE PRECEDENCE.
   B. STORMTRAP MODULES SHALL BE PLACED ON A LEVEL PAD OF 3/4" AGGREGATE, THAT EXTENDS 2'-0" PAST THE OUTSIDE OF THE SYSTEM, PER ASTM C891-09 STANDARD PRACTICE FOR INSTALLATION OF UNDERGROUND PRECAST CONCRETE UTILITY STRUCTURES.
   C. THE STORMTRAP MODULES SHALL BE PLACED SUCH THAT THE MAXIMUM SPACE BETWEEN ADJACENT MODULES DOES NOT EXCEED 3/4". IF THE SPACE EXCEEDS 3/4", THE MODULES SHALL BE RESET WITH APPROPRIATE ADJUSTMENT MADE TO LINE AND GRADE TO BRING THE SPACE INTO SPECIFICATION.
   D. THE HORIZONTAL JOINT BETWEEN THE TOP AND BASE UNIT LEG CONNECTION OF THE STORMTRAP MODULES SHALL BE SEALED TO THE FOUNDATION WITH PREFORMED MASTIC JOINT SEALER ACCORDING TO ASTM C891-09, 8.8 AND 8.12. SEE DETAIL "A"
   E. ALL EXTERIOR JOINTS BETWEEN ADJACENT STORMTRAP MODULES SHALL BE SEALED WITH 0'-8" PRE-FORMED, COLD-APPLIED, SELF-ADHERING ELASTOMERIC RESIN BONDED TO A WOVEN HIGHLY PUNCTURE RESISTANT POLYMER WRAP CONFORMING TO ASTM C891-09 AND SHALL BE 0'-8" INTEGRATED PRIMER SEALANT AS APPROVED BY STORMTRAP. THE ADHESIVE EXTERIOR JOINT WRAP SHALL BE INSTALLED ACCORDING TO THE FOLLOWING INSTALLATION INSTRUCTIONS:
      1. USE A BRUSH OR WET CLOTH TO THOROUGHLY CLEAN THE OUTSIDE SURFACE AT THE POINT WHERE THE JOINT WRAP IS TO BE APPLIED.
      2. A RELEASE PAPER PROTECTS THE ADHESIVE SIDE OF THE JOINT WRAP. PLACE THE ADHESIVE TAPE (BUTYL SIDE DOWN) AROUND THE STRUCTURE, REMOVING THE RELEASE PAPER AS YOU GO. PRESS THE JOINT WRAP FIRMLY AGAINST THE STORMTRAP MODULE SURFACE WHEN APPLYING.
   F. THE FILL PLACED AROUND THE STORMTRAP UNITS MUST BE DEPOSITED ON BOTH SIDES AT THE SAME TIME AND TO APPROXIMATELY THE SAME ELEVATION. AT NO TIME SHALL THE FILL BEHIND ONE SIDE WALL BE MORE THAN 2'-0" HIGHER THAN THE FILL ON THE OPPOSITE SIDE. BACKFILL SHALL BE COMPACTED TO 95% STANDARD PROCTOR DENSITY OR OTHERWISE SPECIFIED BY ENGINEER. CARE SHALL BE TAKEN TO PREVENT ANY WEDGING ACTION AGAINST THE STRUCTURE, AND ALL SLOPES BOUNDING OR WITHIN THE AREA TO BE BACKFILLED MUST BE STEPPED OR SERRATED TO PREVENT WEDGE ACTION. (REFERENCE ARTICLE 502.10 I.D.O.T. S.S.R.B.C.) CARE SHALL ALSO BE TAKEN AS NOT TO DISRUPT THE JOINT WRAP FROM THE JOINT DURING THE BACKFILL PROCESS. BACKFILL MATERIAL SHALL BE CLEAN, CRUSHED, ANGULAR No.5 (AASHTO M43) AGGREGATE.
   G. THE CONTRACTOR IS RESPONSIBLE TO ENSURE THE SELECTED WATER TIGHT SOLUTION PREFORMS AS SPECIFIED BY THE MANUFACTURE.
   H. THE STANDARD STORMTRAP SYSTEM DESIGN IS NOT STRUCTURALLY EVALUATED FOR WATER TIGHT APPLICATIONS. CONTACT STORMTRAP FOR ADDITIONAL STRUCTURAL EVALUATION.

STORMTRAP SPECIFICATION

1. TOTAL COVER: MIN. 6.5' MAX. 8.5' CONSULT STORMTRAP FOR ADDITIONAL COVER OPTIONS.
2. CONCRETE CHAMBER DESIGNED FOR AASHTO HS-20 HIGHWAY LOADING. MIN. SOIL PRESSURE 3000 PSF.
3. ALL DIMENSIONS AND SOIL CONDITIONS, INCLUDING BUT NOT LIMITED TO GROUNDWATER AND SOIL BEARING CAPACITY ARE TO BE VERIFIED IN THE FIELD BY OTHERS PRIOR TO STORMTRAP INSTALLATION.
4. FOR STRUCTURA CALCULATIONS THE GROUND WATER TABLE IS ASSUMED TO BE AT ELEVATION OF 50.00. IF WATER TABLE IS DIFFERENT THAN ASSUMED, CONTACT STORMTRAP.
5. FOR STRUCTURAL CALCULATIONS THE SOIL DENSITY IS ASSUMED TO BE 120 PCF.
6. FOR FLOTATION CALCULATIONS THE GROUND WATER TABLE IS ASSUMED TO BE AT ELEVATION OF 50.00. IF WATER TABLE IS DIFFERENT THAN ASSUMED, CONTACT STORMTRAP.
7. STORMTRAP IS NOT WATERTIGHT. CONTACT STORMTRAP FOR WATERTIGHT OPTIONS. WATERTIGHT APPLICATION TO BE PROVIDED BY OTHERS.

STORMTRAP DETENTION SYSTEM (6)
NOT TO SCALE
*OR APPROVED EQUAL

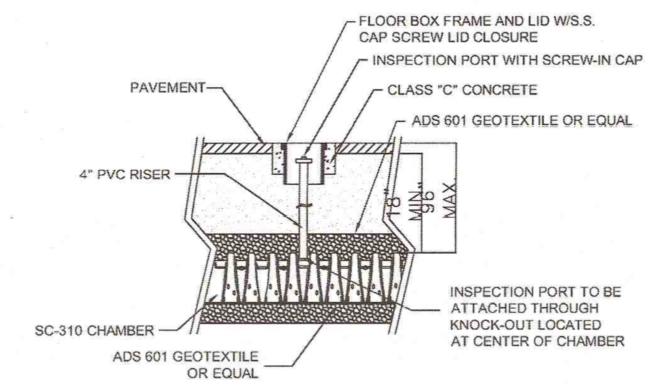

STORMTECH* INSPECTION PORT DETAIL (5)
NOT TO SCALE
*OR APPROVED EQUAL

DESIGN CRITERIA
ALLOWABLE MAX GRADE = 64
ALLOWABLE MIN GRADE = 62
INSIDE HEIGHT ELEVATION = 55
SYSTEM INVERT = 48
STORMTRAP VOLUME = 70,238.95 C.F. / 1.61 A.F.

NOTES:
1. DIMENSION OF STORMTRAP SYSTEM ALLOW FOR A 3/4" GAP BETWEEN EACH UNIT.
2. ALL DIMENSIONS TO BE VERIFIED IN THE FIELD BY OTHERS.
3. SEE SHEET 2 FOR INSTALLATION SPECIFICATIONS.

*STORMTRAP SYSTEM IS PENDING STRUCTURAL REVIEW. PIECE COUNT, STORAGE VOLUME, & PRICING ARE SUBJECT TO CHANGE UPON RECEIPT OF SAID REVIEW.

QTY.	UNIT TYPE	DESCRIPTION	TOP WEIGHT	BASE WEIGHT
0	I	7'-0" DOUBLETRAP	-	-
64	II	7'-0" DOUBLETRAP	15844	15844
0	III	7'-0" DOUBLETRAP	-	-
26	IV	7'-0" DOUBLETRAP	14146	14146
0	VII	7'-0" DOUBLETRAP	12448	12448
4	SPIV	7'-0" DOUBLETRAP	VARIES	
6	PANEL	8" THICK WALL PANELS	5300#	
17	JOINTWRAP	150' PER ROLL		
154	JOINTTAPE	14.5' PER ROLL		

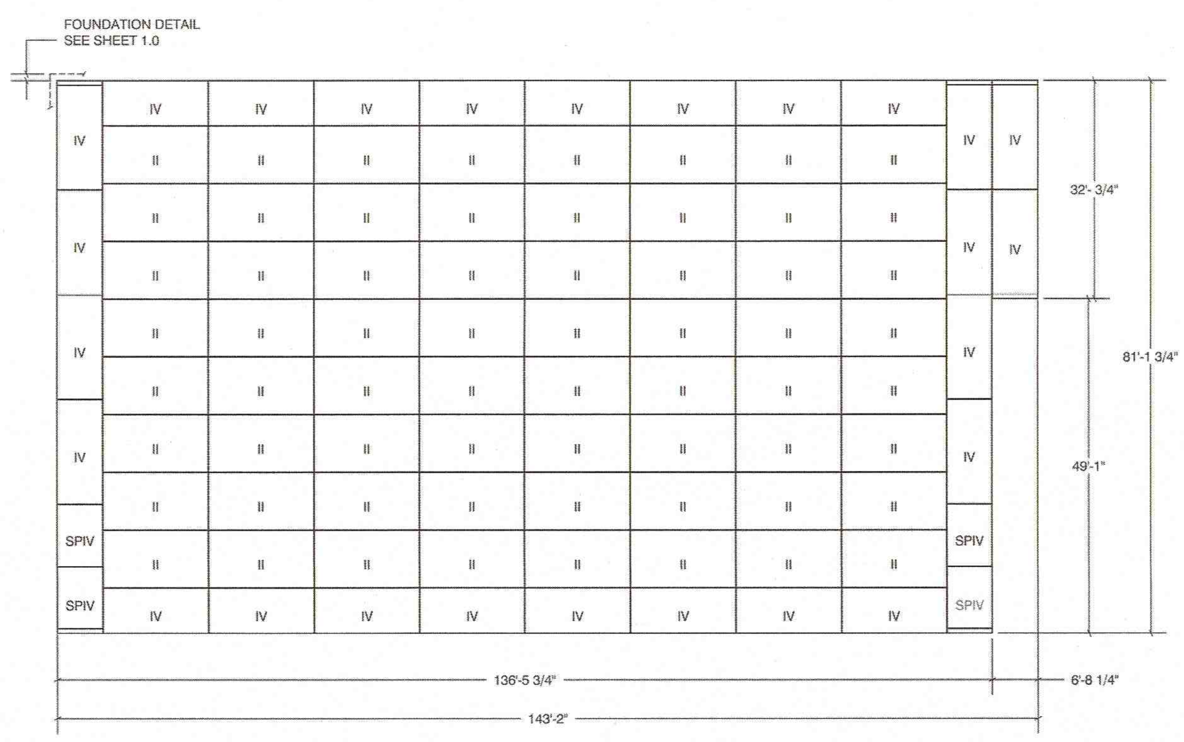

STORMTRAP® PRECAST CONCRETE MODULAR STORMWATER MANAGEMENT SYSTEMS
THIS STORMTRAP DESIGN MAY BE COVERED BY 1 OR MORE OF THE FOLLOWING U.S. PATENTS: NO. 6,991,402 B2, 7,160,058 B2, 7,344,335 B2
CA. PATENT NO. 2,445,609

STORMTRAP DETENTION SYSTEM LAYOUT (7)
NOT TO SCALE
*OR APPROVED EQUAL

1. STORMTECH LLC ("STORMTECH") REQUIRES INSTALLING CONTRACTORS TO USE AND UNDERSTAND STORMTECH'S LATEST INSTALLATION INSTRUCTIONS PRIOR TO BEGINNING SYSTEM INSTALLATION.
2. OUR TECHNICAL SERVICES DEPARTMENT OFFERS INSTALLATION CONSULTATIONS TO INSTALLING CONTRACTORS. CONTACT OUR TECHNICAL SERVICES REPRESENTATIVE AT LEAST 30 DAYS PRIOR TO SYSTEM INSTALLATION TO ARRANGE A PRE-INSTALLATION CONSULTATION. OUR REPRESENTATIVES CAN THEN ANSWER QUESTIONS OR ADDRESS COMMENTS ON THE STORMTECH CHAMBER SYSTEM AND INFORM THE INSTALLING CONTRACTOR OF THE MINIMUM INSTALLATION REQUIREMENTS BEFORE BEGINNING THE SYSTEM'S CONSTRUCTION. CALL **1-888-892-2694** TO SPEAK TO A TECHNICAL SERVICE REPRESENTATIVE OR VISIT **WWW.STORMTECH.COM** TO RECEIVE A COPY OF OUR INSTALLATION INSTRUCTIONS.
3. STORMTECH'S REQUIREMENTS FOR SYSTEMS WITH PAVEMENT DESIGN (ASPHALT, CONCRETE PAVERS, ETC.): MINIMUM COVER IS 18 INCHES NOT INCLUDING PAVEMENT; MAXIMUM COVER IS 96 INCHES INCLUDING PAVEMENT. FOR INSTALLATIONS THAT DO NOT INCLUDE PAVEMENT, WHERE RUTTING FROM VEHICLES MAY OCCUR, MINIMUM REQUIRED COVER IS 24 INCHES, MAXIMUM COVER IS 96 INCHES.
4. THE CONTRACTOR MUST REPORT ANY DISCREPANCIES WITH CHAMBER FOUNDATION MATERIALS BEARING CAPACITIES TO THE DESIGN ENGINEER.
5. AASHTO M288 CLASS 2 NON-WOVEN GEOTEXTILE (FILTER FABRIC) MUST BE USED AS INDICATED IN THE PROJECT PLANS.
6. STONE PLACEMENT BETWEEN CHAMBERS ROWS AND AROUND PERIMETER MUST FOLLOW INSTRUCTIONS AS INDICATED IN THE MOST CURRENT VERSION OF STORMTECH'S INSTALLATION INSTRUCTIONS.
7. BACKFILLING OVER THE CHAMBERS MUST FOLLOW REQUIREMENTS AS INDICATED IN THE MOST CURRENT VERSION OF STORMTECH'S INSTALLATION INSTRUCTIONS.
9. THE CONTRACTOR MUST REFER TO STORMTECH'S INSTALLATION INSTRUCTIONS FOR A TABLE OF ACCEPTABLE VEHICLE LOADS AT VARIOUS DEPTHS OF COVER. THIS INFORMATION IS ALSO AVAILABLE AT STORMTECH'S WEBSITE: **WWW.STORMTECH.COM**. THE CONTRACTOR IS RESPONSIBLE FOR PREVENTING VEHICLES THAT EXCEED STORMTECH'S REQUIREMENTS FROM TRAVELING ACROSS OR PARKING OVER THE STORMWATER SYSTEM.
10. TEMPORARY FENCING, WARNING TAPE AND APPROPRIATELY LOCATED SIGNS ARE COMMONLY USED TO PREVENT UNAUTHORIZED VEHICLES FROM ENTERING SENSITIVE CONSTRUCTION AREAS.

THE CONTRACTOR MUST APPLY EROSION AND SEDIMENT CONTROL MEASURES TO PROTECT THE STORMWATER SYSTEM DURING ALL PHASES OF SITE CONSTRUCTION PER LOCAL CODES AND DESIGN ENGINEER'S SPECIFICATIONS.

STORMTECH PRODUCT WARRANTY IS LIMITED. SEE CURRENT PRODUCT WARRANTY FOR DETAILS. TO ACQUIRE A COPY CALL STORMTECH AT **1-888-892-2694** OR VISIT **WWW.STORMTECH.COM**.

STORMTECH* GENERAL NOTES (8)
NOT TO SCALE
*OR APPROVED EQUAL

N:\PROJECTS\1839-02\CIVIL\DRAWINGS\CURRENT\C-1839-02 - DETAILS.DWG

ENGINEER :

ALLEN & MAJOR ASSOCIATES, INC.
civil & structural engineering ♦ land surveying
environmental consulting ♦ landscape architecture
www.allenmajor.com
100 COMMERCE WAY
P.O. BOX 2118
WOBURN MA 01888-0118
TEL: (781) 935-6889
FAX: (781) 935-2896
WOBURN, MA ♦ LAKEVILLE, MA ♦ MANCHESTER, NH

SEAL:

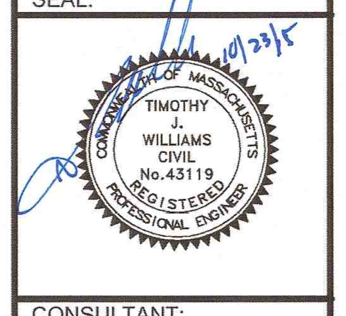

CONSULTANT:

OWNER :

MGM RESORTS INTERNATIONAL™
3260 Industrial Road, Las Vegas,NV 89109
702.692.9622 Phone 702.862.1750 Fax

MGM SPRINGFIELD
SPRINGFIELD, MA

PROJECT :
MGM SPRINGFIELD - SITE/CIVIL RECORD

REVISIONS :

NO.	DATE	ISSUE
1	10/23/15	SITE PLAN APPROVAL

THIS DRAWING HAS BEEN PREPARED IN ELECTRONIC FORMAT. CLIENT/CLIENT'S REPRESENTATIVE OR CONSULTANT MAY BE PROVIDED COPIES OF DRAWINGS AND SPECIFICATIONS ON MAGNETIC MEDIA FOR HIS/HER INFORMATION AND USE FOR SPECIFIC APPLICATION TO THIS PROJECT. DUE TO THE POTENTIAL THAT THE MAGNETIC INFORMATION MAY BE MODIFIED UNINTENTIONALLY OR OTHERWISE, ALLEN & MAJOR ASSOCIATES, INC. MAY REMOVE ALL INDICATION OF THE DOCUMENT'S AUTHORSHIP ON THE MAGNETIC MEDIA. PRINTED REPRESENTATIONS OF THE DRAWINGS AND SPECIFICATIONS ISSUED SHALL BE THE ONLY RECORD COPIES OF ALLEN & MAJOR ASSOCIATES, INC.'S WORK PRODUCT.

Copyright 2015 Allen & Major Associates, Inc.
All Rights Reserved

DRAWING TITLE :

DETAILS
DRAINAGE

All dimensions, levels, layouts and field conditions shall be verified at the site by the contractor before proceeding with the work.

MRID Project No.	58012MASS
Consultant Project No.	1839-02D
Date:	08/14/2015

Drawn By	Checked By	Approved By
KEA	TJW	TJW

File Name: C1839-02D

D-5

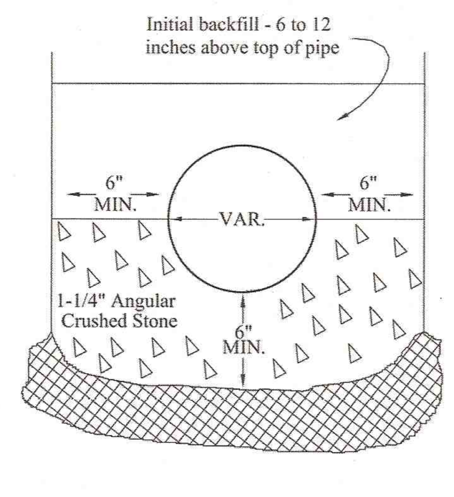

NOTES:
1. STANDARD ENGINEERING DETAIL FROM CITY OF SPRINGFIELD DEPARTMENT OF PUBLIC WORKS.

CITY OF SPRINGFIELD RCP CLASS IV PIPE TRENCH (1)
NOT TO SCALE

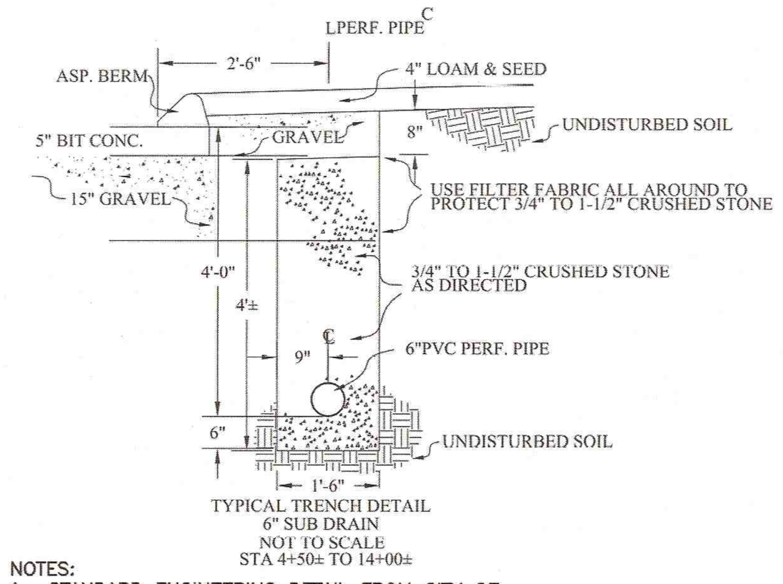

NOTES:
1. STANDARD ENGINEERING DETAIL FROM CITY OF SPRINGFIELD DEPARTMENT OF PUBLIC WORKS.

CITY OF SPRINGFIELD PIPE SUBDRAIN (2)
NOT TO SCALE

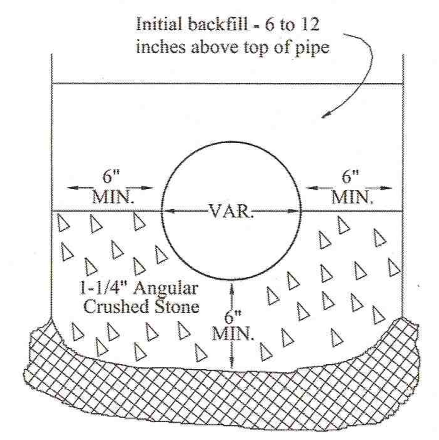

NOTES:
1. STANDARD ENGINEERING DETAIL FROM CITY OF SPRINGFIELD DEPARTMENT OF PUBLIC WORKS.

CITY OF SPRINGFIELD PVC SDR35 PIPE TRENCH (3)
NOT TO SCALE

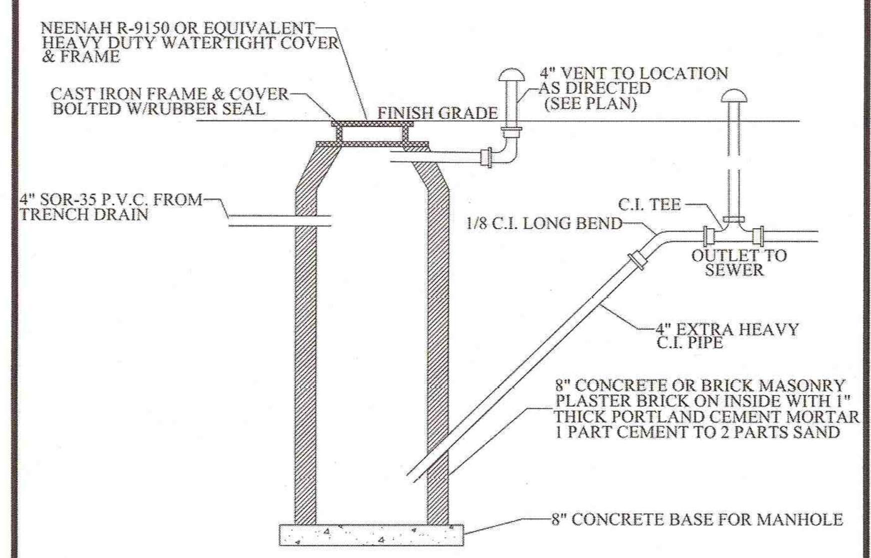

NOTES:
1. STANDARD ENGINEERING DETAIL FROM CITY OF SPRINGFIELD DEPARTMENT OF PUBLIC WORKS.

CITY OF SPRINGFIELD MDC GASOLINE TRAP MANHOLE (4)
NOT TO SCALE

NOT USED (5)
NOT TO SCALE

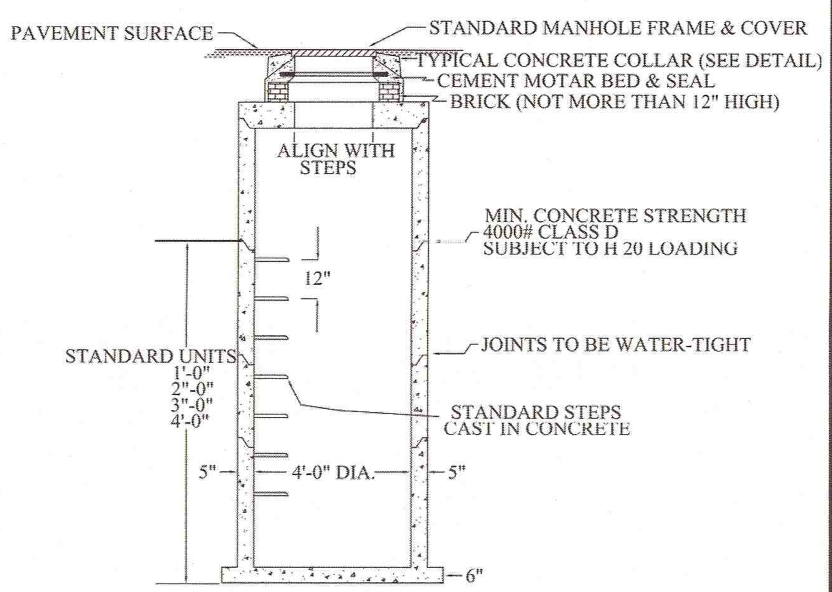

NOTES:
1. STANDARD ENGINEERING DETAIL FROM CITY OF SPRINGFIELD DEPARTMENT OF PUBLIC WORKS.

CITY OF SPRINGFIELD SPRINGFIELD TYPICAL PRECAST MANHOLE (6)
NOT TO SCALE

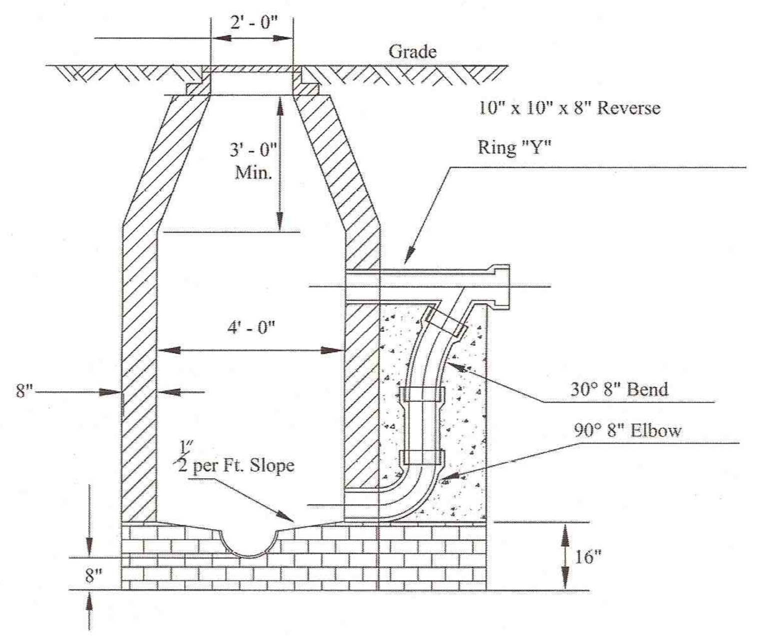

NOTES:
1. STANDARD ENGINEERING DETAIL FROM CITY OF SPRINGFIELD DEPARTMENT OF PUBLIC WORKS.

CITY OF SPRINGFIELD TYPICAL SECTION OF DROP TYPE MANHOLE (7)
NOT TO SCALE

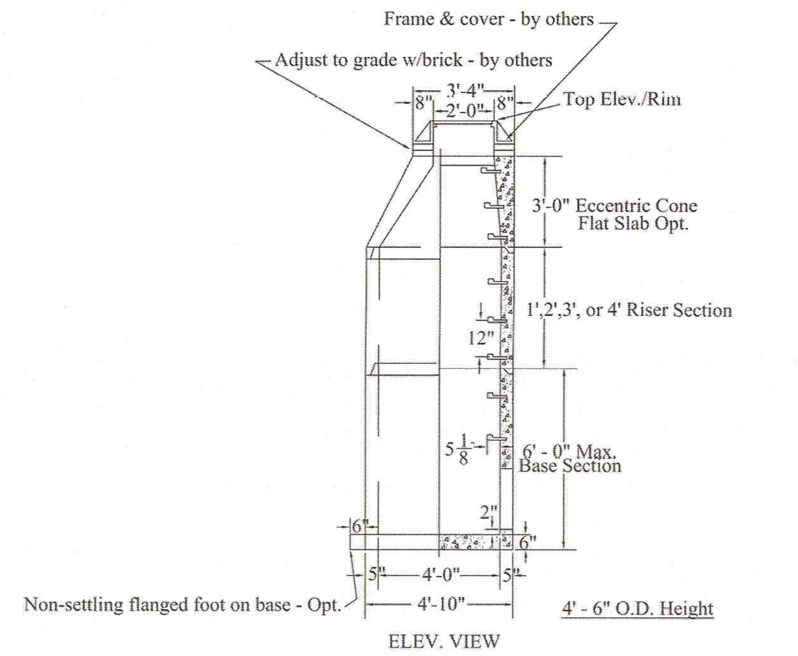

NOTES:
1. STANDARD ENGINEERING DETAIL FROM CITY OF SPRINGFIELD DEPARTMENT OF PUBLIC WORKS.

CITY OF SPRINGFIELD PRECAST CB OFFSET (8)
NOT TO SCALE

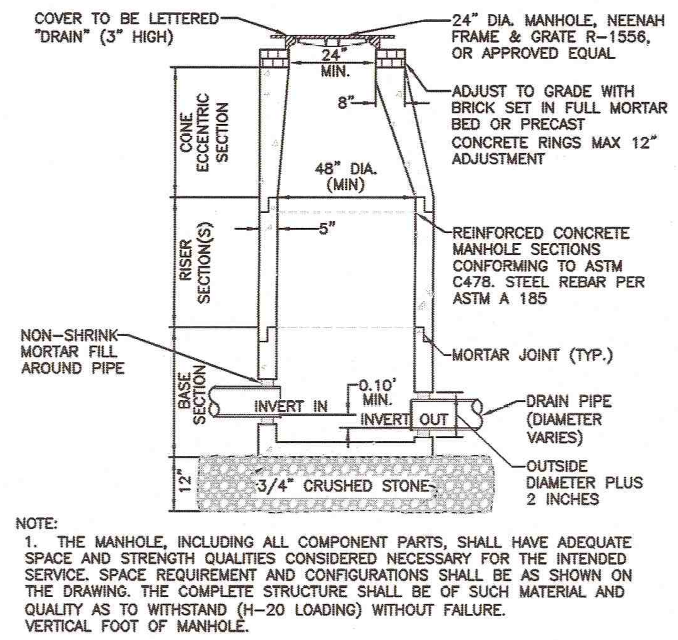

NOTE:
1. THE MANHOLE, INCLUDING ALL COMPONENT PARTS, SHALL HAVE ADEQUATE SPACE AND STRENGTH QUALITIES CONSIDERED NECESSARY FOR THE INTENDED SERVICE. SPACE REQUIREMENT AND CONFIGURATIONS SHALL BE AS SHOWN ON THE DRAWING. THE COMPLETE STRUCTURE SHALL BE OF SUCH MATERIAL AND QUALITY AS TO WITHSTAND (H-20 LOADING) WITHOUT FAILURE. VERTICAL FOOT OF MANHOLE.

PRECAST DRAIN MANHOLE (9)
NOT TO SCALE

NOT USED (10)
NOT TO SCALE

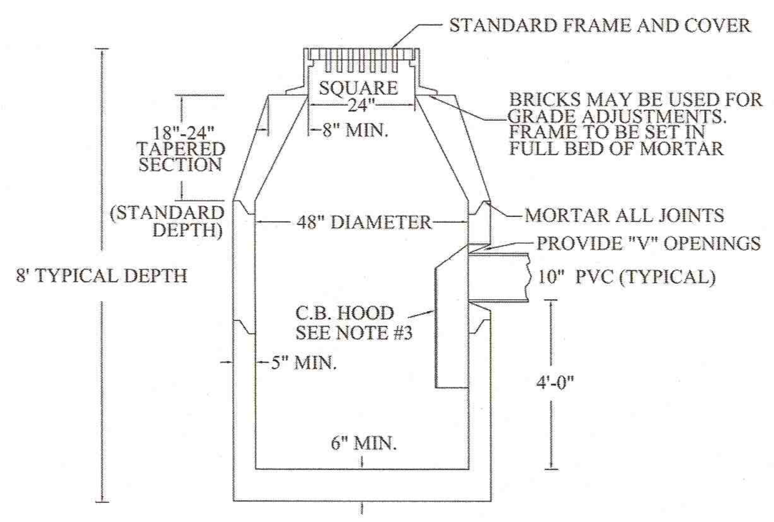

NOTES:
1. MINIMUM CONCRETE STRENGTH 4,000# CLASS D.
2. STRUCTURE SUBJECT TO H 20 LOADING.
3. MASS. HIGHWAY STANDARD CATCH BASIN HOOD SHALL BE INSTALLED ON OUTLET PIPE.
4. STRUCTURE TO COMPLY WITH ALL CITY OF SPRINGFIELD DPW STANDARDS.
5. STANDARD ENGINEERING DETAIL FROM CITY OF SPRINGFIELD DEPARTMENT OF PUBLIC WORKS.

CITY OF SPRINGFIELD PRECAST CONCRETE CATCH BASIN (11)
NOT TO SCALE

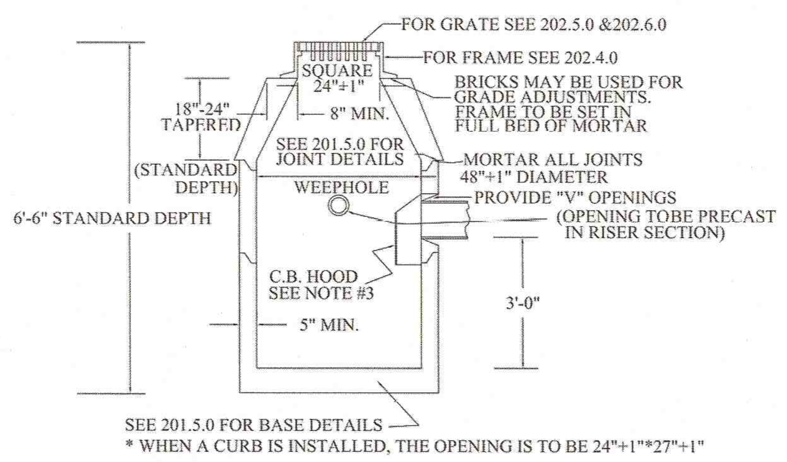

NOTES:
1. DETAILS NOT INDICATED ABOVE ARE TO BE SIMILAR TO THOSE SHOWN ON 202.1.0.
2. FOR DESCRIPTIONS, MATERIALS, AND CONSTRUCTION METHOD, SEE SPECIFICATION.
3. MASS. STANDARD CATCH BASIN HOOD SHALL BE INSTALLED ON OUTLET PIPE)SEE 202.7.0.)
4. STANDARD ENGINEERING DETAIL FROM CITY OF SPRINGFIELD DEPARTMENT OF PUBLIC WORKS.

CITY OF SPRINGFIELD PRECAST CONCRETE CATCH BASIN WITH WEEPHOLE (12)
NOT TO SCALE

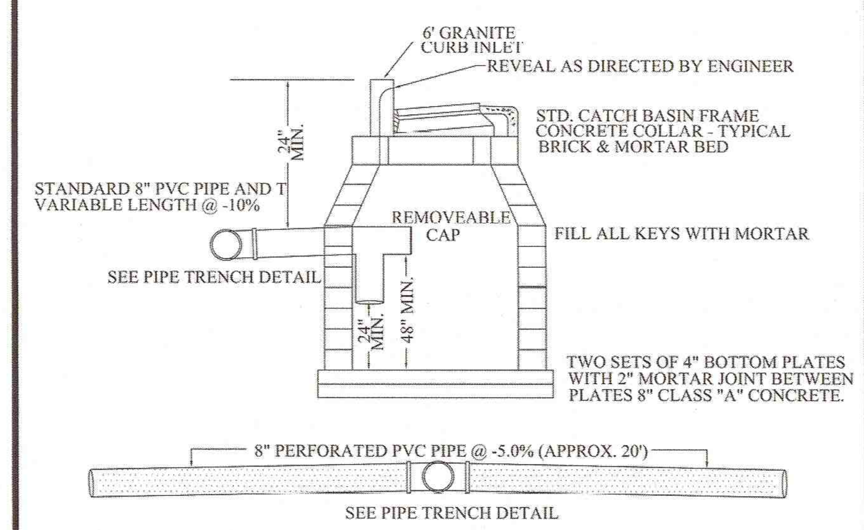

NOTES:
1. STANDARD ENGINEERING DETAIL FROM CITY OF SPRINGFIELD DEPARTMENT OF PUBLIC WORKS.

CITY OF SPRINGFIELD CATCH BASIN WITH PERFORATED PIPE OUTLET (13)
NOT TO SCALE

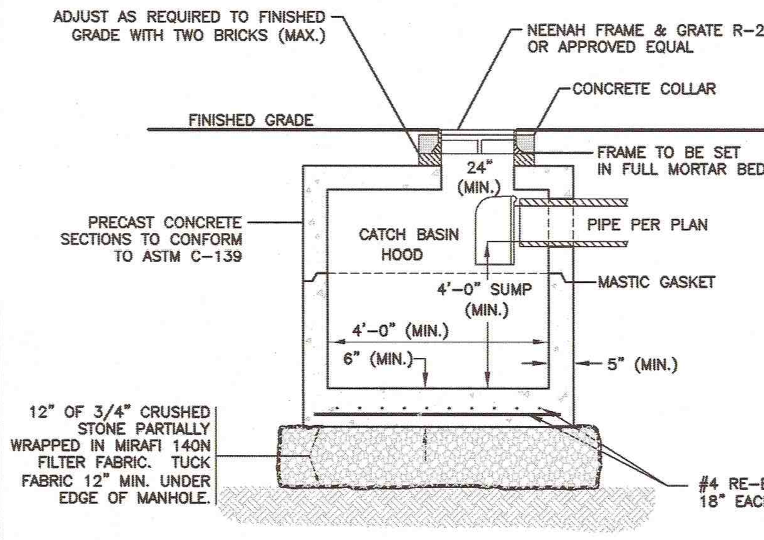

NOTES:
1. ALL PIPE CONNECTIONS TO CATCH BASINS REQUIRE RUBBER BOOTS.
2. ALL CATCH BASINS REQUIRE SNOUT OIL & DEBRIS STOPS, OR APPROVED EQUAL.

CATCH BASIN - FLAT TOP (14)
NOT TO SCALE

NOT USED (15)
NOT TO SCALE

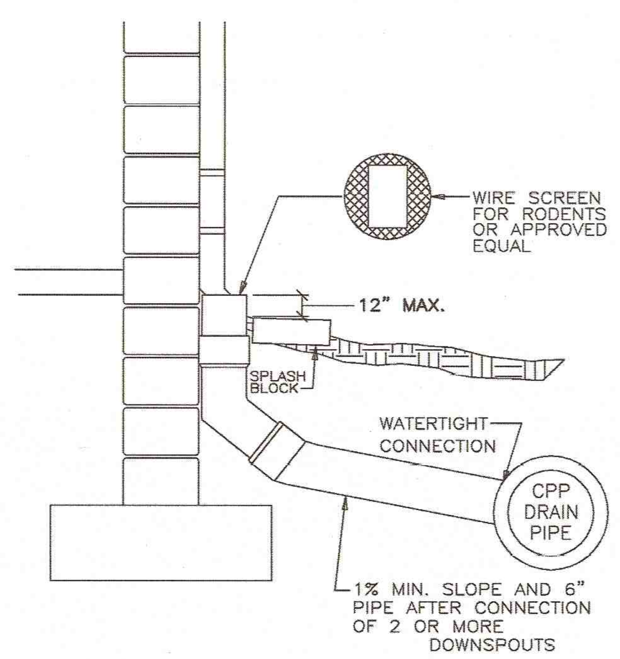

NOTES:
1) A WATERTIGHT CONNECTION SHALL BE MAINTAINED FROM ANY TRANSITION FROM SCH. 40 PVC PIPE TO ANY OTHER PIPE TYPE.

2) SITEWORK CONTRACTOR SHALL BE RESPONSIBLE FOR ALL WORK TO AND INCLUDING THE RODENT SCREEN. BUILDING CONTRACTOR SHALL BE RESPONSIBLE FOR THE CONNECTION AT THE POINT OF THE RODENT SCREEN.

3) DOWNSPOUTS SHALL BE CONNECTED IN THE MANNER SHOWN AND CONVEYED TO THE NEAREST STORM DRAIN.

4) SUBMIT SHOP DRAWINGS FOR DOWNSPOUT OVERFLOW, SPLASH BACK, RODENT SCREEN, FITTINGS AND PIPE.

TYPICAL ROOF DRAIN (RD) DOWNSPOUT COLLECTOR (16)
NOT TO SCALE

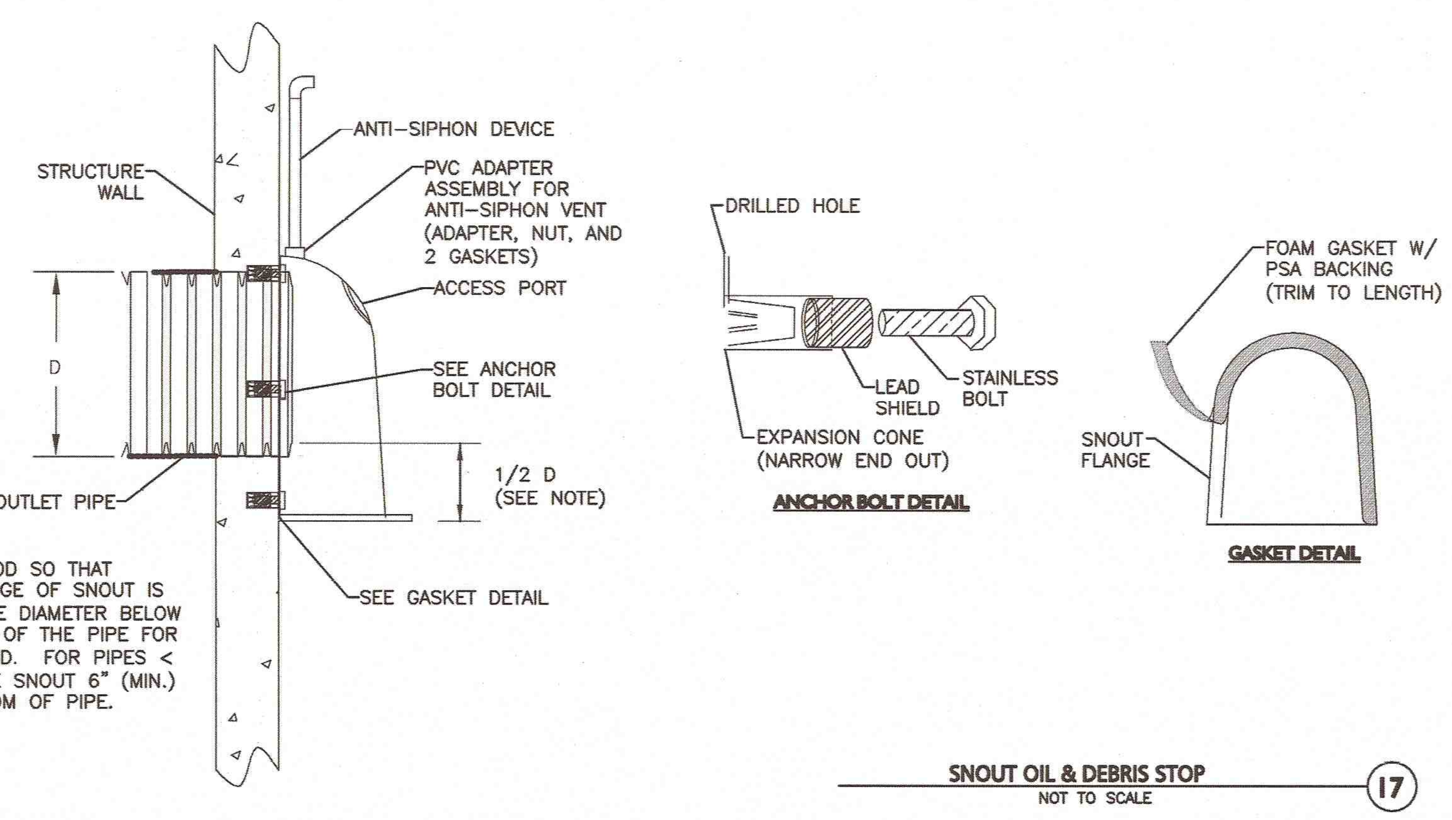

NOTE:
POSITION HOOD SO THAT BOTTOM FLANGE OF SNOUT IS 1/2 THE PIPE DIAMETER BELOW THE BOTTOM OF THE PIPE FOR PIPES >12" ID. FOR PIPES < 10" ID PLACE SNOUT 6" (MIN.) BELOW BOTTOM OF PIPE.

SNOUT OIL & DEBRIS STOP (17)
NOT TO SCALE

DIMENSIONS	A	B	C	D	E	F	G	H
8" AND 10" PIPE	15"	15"	8"	9"	2"	7/8"	1-7/8"	14"
12" AND 15" PIPE	18"	18"	10"	2"	1"	14"	1-7/8"	11-1/4"

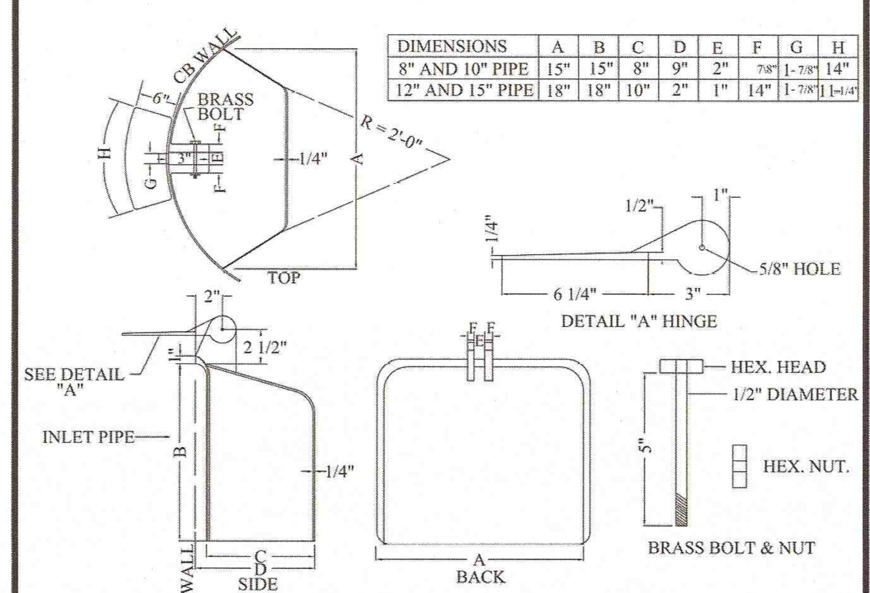

NOTES:
1. STANDARD ENGINEERING DETAIL FROM CITY OF SPRINGFIELD DEPARTMENT OF PUBLIC WORKS.

CITY OF SPRINFIELD CATCH BASIN HOOD (18)
NOT TO SCALE

N:\PROJECTS\1839-02\CIVIL\DRAWINGS\CURRENT\C-1839-02 - DETAILS.DWG

ENGINEER:

ALLEN & MAJOR ASSOCIATES, INC.
civil & structural engineering ♦ land surveying
environmental consulting ♦ landscape architecture
www.allenmajor.com
100 COMMERCE WAY
P.O. BOX 2118
WOBURN MA 01888-0118
TEL: (781) 935-6889
FAX: (781) 935-2896
WOBURN, MA ♦ LAKEVILLE, MA ♦ MANCHESTER, NH

SEAL:

COMMONWEALTH OF MASSACHUSETTS
TIMOTHY J. WILLIAMS
CIVIL
No.43119
REGISTERED PROFESSIONAL ENGINEER
10/23/15

CONSULTANT:

OWNER:

MGM RESORTS INTERNATIONAL
3260 Industrial Road, Las Vegas,NV 89109
702.692.9622 Phone 702.862.1750 Fax

MGM SPRINGFIELD
SPRINGFIELD, MA

PROJECT:
MGM SPRINGFIELD - SITE/CIVIL RECORD

REVISIONS:

NO.	DATE	ISSUE
1	10/23/15	SITE PLAN APPROVAL

THIS DRAWING HAS BEEN PREPARED IN ELECTRONIC FORMAT. CLIENT/CLIENT'S REPRESENTATIVE OR CONSULTANT MAY BE PROVIDED COPIES OF DRAWINGS AND SPECIFICATIONS ON MAGNETIC MEDIA FOR HIS/HER INFORMATION AND USE FOR SPECIFIC APPLICATION TO THIS PROJECT. DUE TO THE POTENTIAL THAT THE MAGNETIC INFORMATION MAY BE MODIFIED UNINTENTIONALLY OR OTHERWISE, ALLEN & MAJOR ASSOCIATES, INC. MAY REMOVE ALL INDICATION OF THE DOCUMENT'S AUTHORSHIP ON THE MAGNETIC MEDIA. PRINTED REPRESENTATIONS OF THE DRAWINGS AND SPECIFICATIONS ISSUED SHALL BE THE ONLY RECORD COPIES OF ALLEN & MAJOR ASSOCIATES, INC.'S WORK PRODUCT.

Copyright 2015 Allen & Major Associates, Inc. All Rights Reserved

DRAWING TITLE:

DETAILS
DRAINAGE

All dimensions, levels, layouts and field conditions shall be verified at the site by the contractor before proceeding with the work.

MRID Project No.	58012MASS
Consultant Project No.	1839-02D
Date:	08/14/2015

Drawn By	Checked By	Approved By
KEA	TJW	TJW

File Name: C1839-02D

D-6

1. PRIOR TO STARTING ANY OTHER WORK ON THE SITE, THE CONTRACTOR SHALL NOTIFY APPROPRIATE AGENCIES AND SHALL INSTALL EROSION CONTROL MEASURES AS SHOWN ON THE PLANS AND AS IDENTIFIED, STATE, AND LOCAL APPROVAL DOCUMENTS PERTAINING TO THIS PROJECT.
2. EROSION CONTROLS TO BE INSTALLED AT THE EDGE OF PROPOSED WORK. EROSION CONTROLS TO ACT AS A LIMIT OF WORK LINE TO ENSURE THAT NO EQUIPMENT ENCROACHES ON TO ADJACENT PROPERTIES.
3. EROSION CONTROLS SHALL REMAIN IN PLACE AND BE MAINTAINED FOR THE DURATION OF THE PROJECT TO LIMIT THE MOVEMENT OF SILTATION AND SEDIMENTS FROM ENTERING EXISTING DRAINAGE SYSTEMS OR FROM LEAVING THE PARCEL. ANY ACCUMULATED SEDIMENTS ARE TO BE REMOVED FROM THE EROSION CONTROLS AND DISPOSED TO PROPERLY. ADDITIONALLY, ALL EROSION CONTROLS ARE TO BE INSPECTED AFTER A STORM EVENT AND THE CONTROLS REPLACED OR ARMORED AS NECESSARY AND ACCUMULATED SEDIMENTS REMOVED.
4. ADDITIONAL EROSION CONTROLS ARE TO BE UTILIZED AS NECESSARY AND AS DIRECTED BY THE ENGINEER TO LIMIT SEDIMENTS FROM DISCHARGING TO ADJACENT PROPERTIES OR INTO EXISTING STORM DRAIN SYSTEMS.
5. CONTRACTOR SHALL BE RESPONSIBLE TO CONTROL CONSTRUCTION SUCH THAT EROSION SHALL NOT AFFECT ON-SITE REGULATED AREAS (WETLANDS, ETC) AND OFF-SITE AREAS, WHETHER SUCH EROSION IS CAUSED BY WATER, WIND, OR DIRECT DEPOSIT.
6. A RESERVE AMOUNT OF EROSION CONTROL MATERIALS ARE TO BE KEPT WITHIN EASY ACCESS ON SITE AT ALL TIMES.
7. CONTRACTOR SHALL PERFORM CONSTRUCTION SEQUENCING SUCH THAT EARTH MATERIALS ARE EXPOSED FOR A MINIMUM OF TIME BEFORE THEY ARE COVERED, SEEDED, OR OTHERWISE STABILIZED TO PREVENT EROSION.
8. TEMPORARY STOCKPILING OF MATERIALS RELATED TO THE CONSTRUCTION ACTIVITIES ARE TO BE PROPERLY STABILIZED, PROTECTED AND DEMARCATED TO LIMIT MOVEMENT OF MATERIAL INTO STORM DRAIN SYSTEM OR ON TO ADJACENT PARCELS.
9. REFUELING AND ANY WORK ASSOCIATED WITH THE MAINTENANCE OF CONSTRUCTION EQUIPMENT TO BE PERFORMED IN COMPLIANCE WITH APPLICABLE REGULATIONS.
10. THE AREAS OF CONSTRUCTION SHALL REMAIN IN A STABLE CONDITION AT THE CLOSE OF EACH CONSTRUCTION DAY. EROSION CONTROLS SHALL BE CHECKED AT THIS TIME AND MAINTAINED OR REINFORCED IF NECESSARY.
11. EROSION CONTROLS SHALL REMAIN IN PLACE UNTIL ALL DISTURBED AREAS HAVE BEEN STABILIZED WITH PAVEMENT, PLANTINGS, OR WITH AN ESTABLISHED STAND OF GRASS. EROSION CONTROLS SHALL NOT BE REMOVED UNTIL SITE STABILIZATION IS COMPLETE. CONTRACTOR SHALL REMOVE AND DISPOSE OF EROSION CONTROL MEASURES AND CLEAN SEDIMENT AND DEBRIS FROM ENTIRE DRAINAGE AND SEWER SYSTEMS AS DIRECTED BY THE ENGINEER, DPW AND/OR SWSC.
12. UTILIZE APPROPRIATE DEWATERING SYSTEMS AND TECHNIQUES TO MAINTAIN THE EXCAVATED AREA SUFFICIENTLY DRY FROM GROUNDWATER AND/OR SURFACE RUNOFF SO AS NOT TO ADVERSELY AFFECT CONSTRUCTION PROCEDURES OR CAUSE EXCESSIVE DISTURBANCE OF UNDERLYING NATURAL GROUND.
13. PROVIDE AND STORE AUXILIARY DEWATERING EQUIPMENT ON THE SITE IN THE EVENT OF BREAKDOWN. PROVIDE NON-WOVEN FILTER FABRIC WHERE REQUIRED FOR UNDERDRAIN SYSTEMS. THE NON-WOVEN FILTER FABRIC SHALL BE SPECIFICALLY DESIGNED FOR SUBSURFACE DRAINAGE APPLICATIONS.
14. WATER FROM THE TRENCHES AND EXCAVATIONS SHALL BE DISPOSED OF IN SUCH A MANNER AS TO AVOID PUBLIC NUISANCE, INJURY TO PUBLIC HEALTH OR THE ENVIRONMENT, DAMAGE OR PUBLIC OR PRIVATE PROPERTY, OR DAMAGE TO PUBLIC OR PRIVATE PROPERTY, OR DAMAGE TO THE WORK COMPLETED OR IN PROGRESS. DO NOT DISCHARGE WATER INTO ANY SANITARY SEWER SYSTEM. SILTATION BARRIERS SHALL BE UTILIZED AS NECESSARY.
15. WATER FROM TRENCHES AND EXCAVATIONS SHALL NOT BE DISCHARGED DIRECTLY TO STORM DRAIN SYSTEMS. PROPER TREATMENT TO A SEDIMENTATION AREA IS TO TAKE PLACE PRIOR TO DISCHARGE TO ANY DRAINAGE SYSTEMS.
16. THE CONTRACTOR SHALL REPAIR ANY DAMAGE RESULTING FROM THE FAILURE OF THE DEWATERING OPERATIONS OR FROM FAILURE TO MAINTAIN ALL THE AREAS OF WORK IN SUITABLE DRY CONDITION.
17. PRECAUTIONS SHALL BE TAKEN TO PROTECT NEW WORK FROM FLOODING DURING STORMS OR FROM OTHER CAUSES. GRADING IN THE AREAS SURROUNDING ALL EXCAVATIONS SHALL BE PROPERLY SLOPED TO PREVENT WATER FROM RUNNING INTO THE EXCAVATED AREA OR TO ADJACENT PROPERTIES. WHERE REQUIRED, TEMPORARY DITCHES SHALL BE PROVIDED FOR DRAINAGE. UPON COMPLETION OF THE WORK AND WHEN DIRECTED, ALL AREAS SHALL BE RESTORED IN A SATISFACTORY MANNER AND AS DIRECTED.
18. ALL PIPELINES OR STRUCTURES NOT STABLE AGAINST UPLIFT DURING CONSTRUCTION OR PRIOR TO COMPLETION SHALL BE THOROUGHLY BRACED OR OTHERWISE PROTECTED.
19. DO NOT EXCAVATE UNTIL THE DEWATERING SYSTEM IS OPERATIONAL AND THE EXCAVATION MAY PROCEED WITHOUT DISTURBANCE TO THE FINAL SUBGRADE.
21. UNLESS OTHERWISE SPECIFIED, CONTINUE DEWATERING UNINTERRUPTED UNTIL THE STRUCTURES, PIPES, AND APPURTENANCES TO BE BUILT HAVE BEEN PROPERLY INSTALLED. WHERE SUBGRADE MATERIALS ARE UNABLE TO MEET THE SUBGRADE DENSITY REQUIREMENTS DUE TO IMPROPER DEWATERING TECHNIQUES, REMOVE AND REPLACE THE MATERIALS AS DIRECTED BY THE ENGINEER.

CITY OF SPRINGFIELD EROSION CONTROL AND DEWATERING NOTES (1)
NOT TO SCALE

1. CONTRACTOR SHALL NOTIFY "DIG-SAFE" (1-888-344-7233) AT LEAST 72 HOURS BEFORE ANY EXCAVATION.
2. UPON AWARD OF CONTRACT, CONTRACTOR SHALL MAKE NECESSARY CONSTRUCTION NOTIFICATIONS AND APPLY FOR AND OBTAIN NECESSARY PERMITS, PAY FEES, AND POST BONDS ASSOCIATED WITH THE WORK INDICATED ON THE DRAWINGS, IN THE SPECIFICATIONS, AND IN THE CONTRACT DOCUMENTS. DO NOT CLOSE OR OBSTRUCT ROADWAYS, SIDEWALKS, AND FIRE HYDRANTS, OR EXCAVATE WITHOUT APPROPRIATE PERMITS.
3. CONTRACTOR IS RESPONSIBLE FOR OBTAINING STREET OCCUPANCY; STREET OPENING; AND TRENCH PERMITS FROM THE DPW ENGINEERING DIVISION BEFORE CONSTRUCTION.
4. CONTRACTOR SHALL BE RESPONSIBLE FOR SITE SECURITY AND JOB SAFETY; CONSTRUCTION ACTIVITIES SHALL BE IN ACCORDANCE WITH OSHA STANDARDS AND LOCAL REQUIREMENTS.
5. CONTRACTOR SHALL ENSURE THE MAINTENANCE OF SAFETY AND TRAFFIC FLOW ON THE PUBLIC AND PRIVATE WAYS AFFECTED BY THE CONSTRUCTION OF THIS PROJECT. THE CONSTRUCTION SITE MUST BE ACCESSIBLE TO EMERGENCY VEHICLES AT ALL TIMES.
6. ACCESSIBLE ROUTES, PARKING SPACES, RAMPS SIDEWALKS AND WALKWAYS SHALL BE CONSTRUCTED IN CONFORMANCE WITH THE FEDERAL AMERICANS WITH DISABILITES ACT (ADA); AND STATE AND LOCAL LAWS AND REGULATIONS (WHICHEVER ARE MORE STRINGENT).
7. CONTRACTOR SHALL CAREFULLY COORDINATE ALL WORK WITH THAT OF HIS/HER SUBCONTRACTORS, THE OWNER, OTHER CONTRACTORS WORKING WITHIN THE PROJECT LIMITS.
8. WORK WITHIN STATE RIGHTS-OF-WAY SHALL CONFORM TO THE LATEST EDITION OF THE STATE HIGHWAY DEPARTMENTS STANDARD SPECIFICATIONS FOR HIGHWAYS AND BRIDGES. WORK WITHIN THE LOCAL RIGHTS-OF-WAY SHALL CONFORM TO THE CITY OF SPRINGFIELD D.P.W. AND WATER AND SEWER COMMISSION (SWSC) STANDARDS.
9. CONTRACTOR SHALL ENSURE THAT "AS-BUILT" SITE AND UTILITY DRAWINGS ARE TO BE SUBMITTED TO THE DPW ENGINEERING DIVISION UPON COMPLETION OF THIS PROJECT.
10. CONTRACTOR WILL PROVIDE A SMOOTH, FLUSH TRANSITION BETWEEN NEW AND EXISTING PAVEMENTS.
11. TRAFFIC SIGNAGE AND PAVEMENT MARKINGS SHALL CONFORM TO THE MANUAL OF UNIFORM TRAFFIC CONTROL DEVICES. ALL PAVEMENT MARKINGS CHANGED, ALTERED OR REMOVED SHALL BE RE-APPLIED.
12. IN THE EVENT THAT SUSPECTED CONTAMINATED SOIL, GROUNDWATER, AND OTHER MEDIA ARE ENCOUNTERED DURING EXCAVATION AND CONSTRUCTION ACTIVITIES BASED ON VISUAL, OLFACTORY, OR OTHER EVIDENCE, THE CONTRACTOR SHALL STOP WORK IN THE VICINITY OF THE SUSPECT MATERIAL TO AVOID FURTHER SPREADING OF THE MATERIAL, AND SHALL NOTIFY THE OWNER IMMEDIATELY SO THAT THE APPROPRIATE TESTING AND SUBSEQUENT ACTION CAN BE TAKEN.
13. AREAS OUTSIDE THE LIMITS OF PROPOSED WORK DISTURBED BY THE CONTRACTOR'S OPERATIONS, TO INCLUDE DELIVERIES AND CONSTRUCTION LOAD DAMAGE, SHALL BE RESTORED BY THE CONTRACTOR TO THEIR ORIGINAL CONDITION AT THE CONTRACTOR'S EXPENSE.
14. AREAS DISTURBED DURING CONSTRUCTION AND NOT RESTORED WITH IMPERVIOUS SURFACES (BUILDINGS, PAVEMENTS, WALKS, ETC.) SHALL RECEIVE SIX (6) INCHES LOAM AND SEED.
15. CONTRACTOR SHALL PREVENT DUST, SEDIMENT, AND DEBRIS FROM EXITING THE SITE AND SHALL BE RESPONSIBLE FOR CLEANUP, REPAIRS AND CORRECTIVE ACTION IF SUCH OCCURS.
16. CONTRACTOR SHALL CONTROL STORMWATER RUNOFF DURING CONSTRUCTION TO PREVENT ADVERSE IMPACTS TO DRAINAGE SYSTEM; OFF SITE AREAS; AND SHALL BE RESPONSIBLE TO REPAIR RESULTING DAMAGES, IF ANY, AT NO COST TO OWNER AND THE CITY OF SPRINGFIELD.
17. SPRINGFIELD D.P.W. SITE PLAN APPROVAL IS NOT TO BE CONSTRUED AS AN ALL-INCLUSIVE APPROVAL, AS OTHER APPROVALS MAY BE NECESSARY, I.E. CITY FORESTER, CONSERVATION, FIRE DEPT. AND WATER AND SEWER COMMISSION, ETC.
18. CONTACT DPW FOR REVIEW AND APPROVAL OF ANY MODIFICATIONS OF THE APPROVED SITE PLANS PRIOR TO THE WORK BEING PERFORMED.
19. CONTACT SWSC FOR REVIEW AND APPROVAL OF ANY MODIFICATIONS OF THE APPROVED SITE PLANS PRIOR TO THE WORK BEING PERFORMED.
20. ALL WATER, SEWER, DRAIN AND PAVEMENT MATERIAL AND CONSTRUCTION SHALL CONFORM TO THE CITY OF SPRINGFIELD / SWSC REQUIREMENTS.
21. ALL WATER AND SEWER CONSTRUCTION SHALL BE INSPECTED BY THE SWSC BEFORE BEING BACKFILLED.
22. THE CITY OF SPRINGFIELD / SWSC SHALL BE NOTIFIED AT LEAST 24 HOURS PRIOR TO THE REQUIRED INSPECTIONS.

CITY OF SPRINGFIELD CONSTRUCTION NOTES (2)
NOT TO SCALE

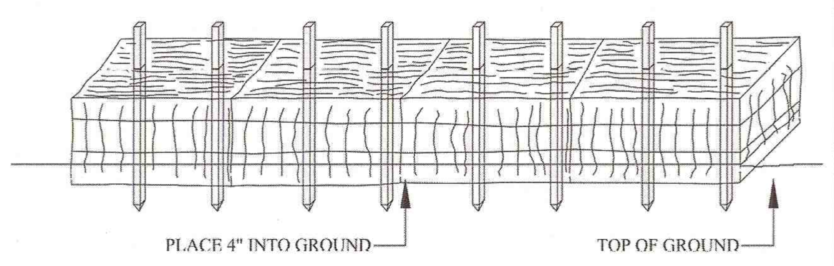

CITY OF SPRINGFIELD STAKED HAY BALES (3)
NOT TO SCALE

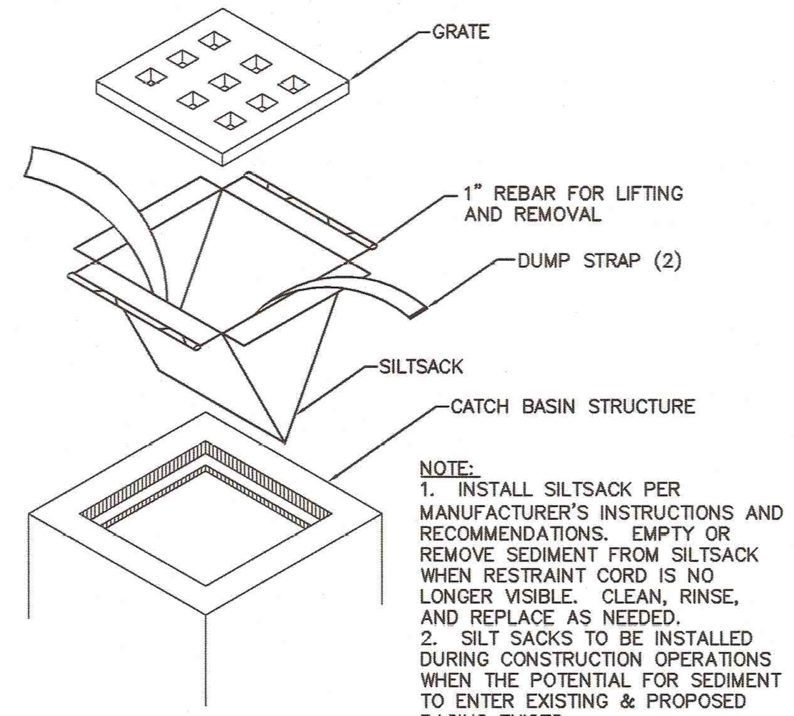

NOTE:
1. INSTALL SILTSACK PER MANUFACTURER'S INSTRUCTIONS AND RECOMMENDATIONS. EMPTY OR REMOVE SEDIMENT FROM SILTSACK WHEN RESTRAINT CORD IS NO LONGER VISIBLE. CLEAN, RINSE, AND REPLACE AS NEEDED.
2. SILT SACKS TO BE INSTALLED DURING CONSTRUCTION OPERATIONS WHEN THE POTENTIAL FOR SEDIMENT TO ENTER EXISTING & PROPOSED BASINS EXISTS.

CATCH BASIN SILT SACK (4)
NOT TO SCALE

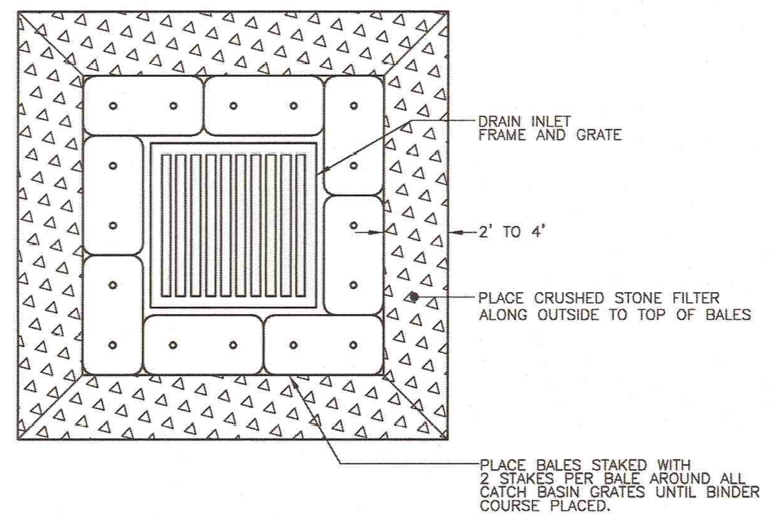

NOTES:
1. BALES SHALL BE PLACED IN A ROW WITH THE ENDS TIGHTLY ABUTTING THE ADJACENT BALES.
2. BALES SHALL BE SECURELY ANCHORED IN PLACE BY STAKES OR RE-BARS DRIVEN THROUGH THE BALES. THE FIRST STAKE IN EACH BALE SHALL BE ANGLED TOWARD PREVIOUSLY LAID BALE TO FORCE BALES TOGETHER.
3. INSPECTION SHALL BE FREQUENT AND REPAIR OR REPLACEMENT SHALL BE MADE PROMPTLY AS NEEDED.

CATCH BASIN HAYBALE FILTER (5)
NOT TO SCALE

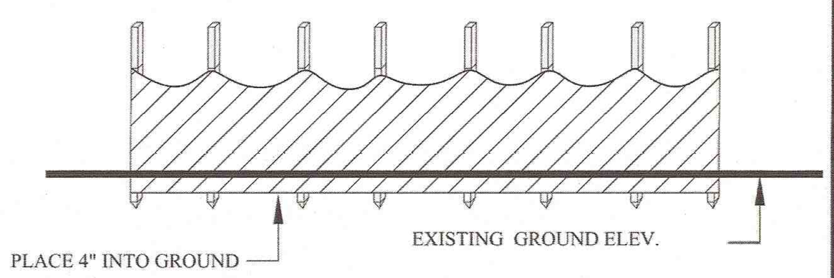

MITAGATION MEASURE

CITY OF SPRINGFIELD SILT FENCE (7)
NOT TO SCALE

NOTES:
1. THE ENTRANCE SHALL BE MAINTAINED IN A CONDITION THAT WILL PREVENT TRACKING OR FLOWING OF SEDIMENT ONTO PUBLIC RIGHT-OF-WAYS. THIS MAY REQUIRE TOP DRESSING, REPAIR AND/OR CLEANOUT OF ANY MEASURES USED TO TRAP SEDIMENT.
2. WHEN NECESSARY, WHEELS SHALL BE CLEANED PRIOR TO ENTERING THE PUBLIC RIGHT-OF-WAY.
3. WHEN WASHING IS REQUIRED, IT SHALL BE DONE ON AN AREA STABILIZED WITH CRUSHED STONE THAT DRAINS INTO AN APPROVED SEDIMENT TRAP OR SEDIMENT BASIN.
4. USE SANDBAGS, HAYBALES, OR OTHER APPROVED METHODS TO CHANNELIZE RUNOFF TO BASIN AS REQUIRED.

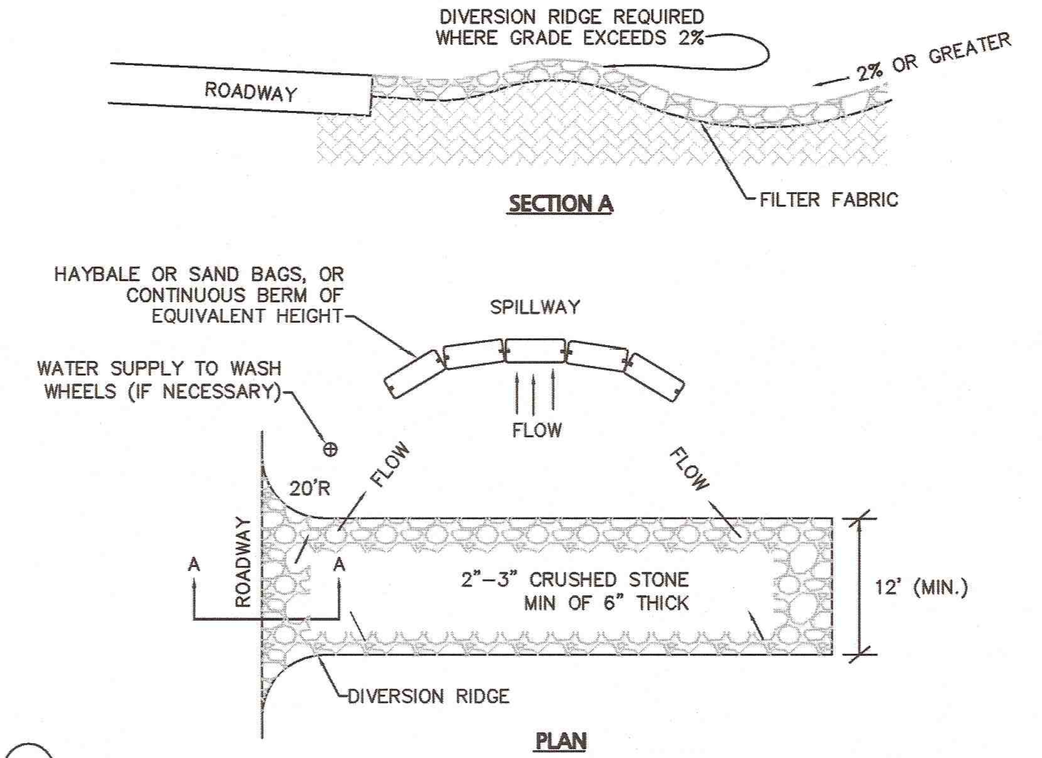

TEMPORARY CONSTRUCTION ENTRANCE (8)
NOT TO SCALE

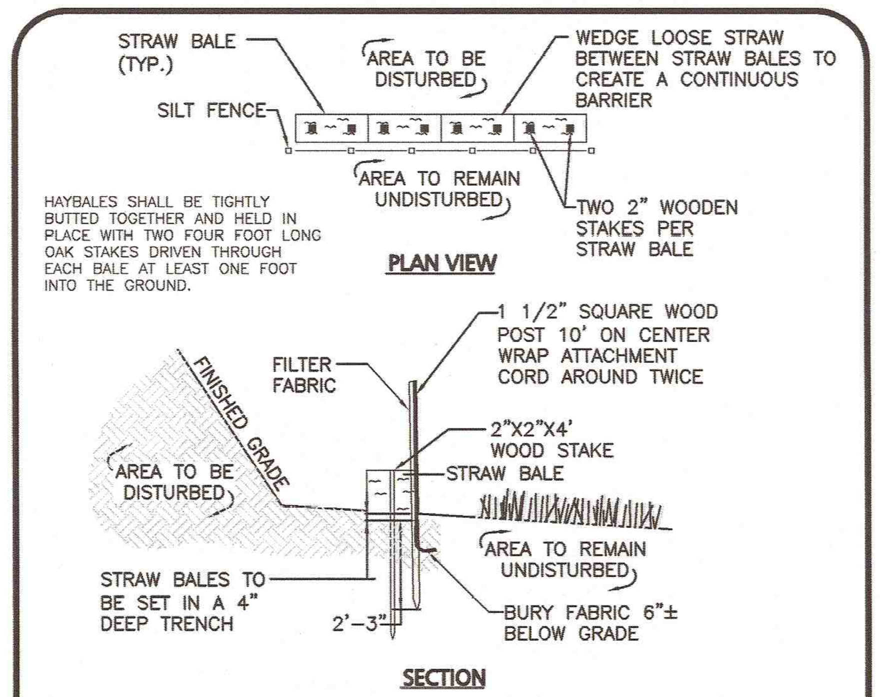

NOTE:
DEPTH TO BE 2' UNLESS POST IS TO BE SET IN PEAT THEN 3' OR DEPTH POSSIBLE BY PUSHING BY HAND SHALL BE REQUIRED.

SILT FENCE AND STRAW BALE DETAIL (9)
NOT TO SCALE

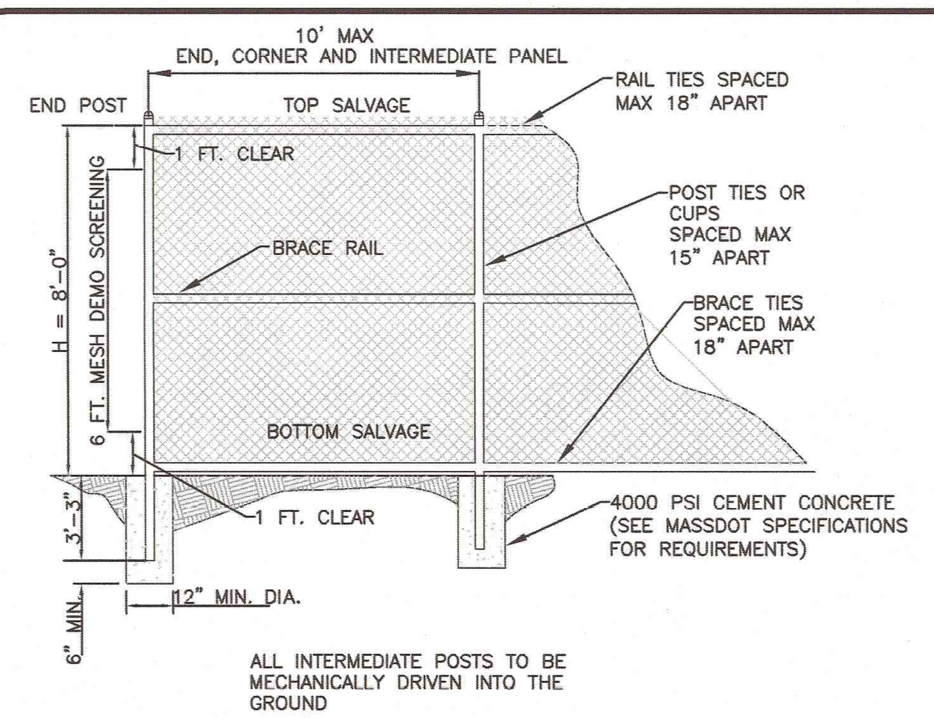

NOTES:
1. GALVANIZED STEEL; BLACK VINYL COATING, OPTIONAL.
2. PROVIDE SHOP DRAWING FOR APPROVAL.
3. 6-FOOT BLACK MESH DEMOLITION SCREEN NETTING SHALL BE PROVIDED. ONE FOOT CLEARANCE ON TOP AND BOTTOM OF 8-FOOT FENCE, TYPICAL.
4. 8-FOOT FENCE HEIGHT

CHAIN LINK FENCE DETAIL (10)
NOT TO SCALE

NOT USED (11)
NOT TO SCALE

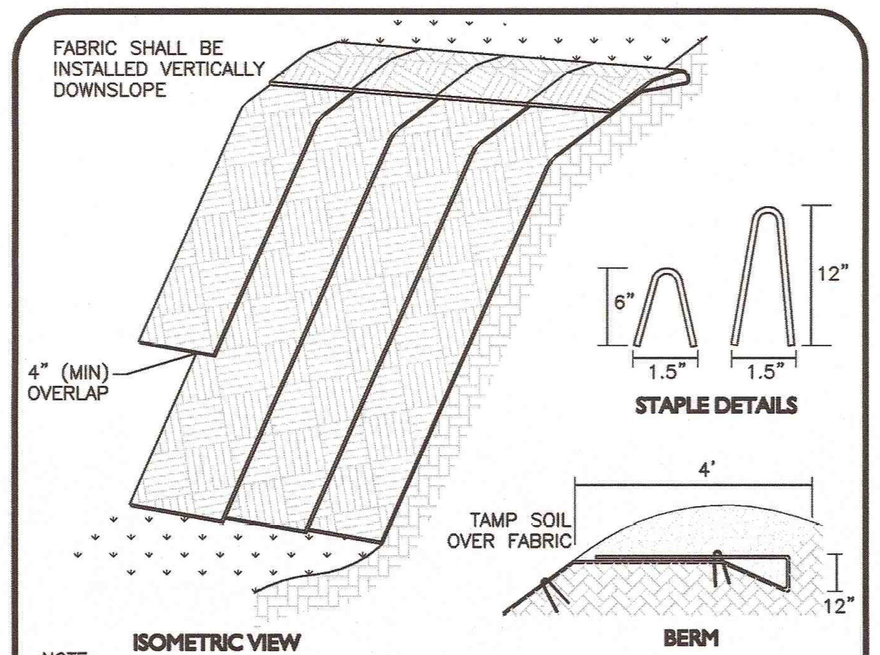

NOTE:
1. SLOPE SURFACE SHALL BE FREE OF ROCKS, CLODS, STICKS AND GRASS. FABRIC SHALL HAVE GOOD SOIL CONTACT.
2. APPLY PERMANENT SEEDING BEFORE PLACING FABRIC.
3. LAY BLANKETS LOOSELY AND STAKE OR STAPLE TO MAINTAIN DIRECT CONTACT WITH THE SOIL. DO NOT STRETCH.
4. CHOOSE MATERIAL BASED ON SLOPE, SOILS, AND APPLICATION.

EROSION CONTROL FABRIC (12)
NOT TO SCALE

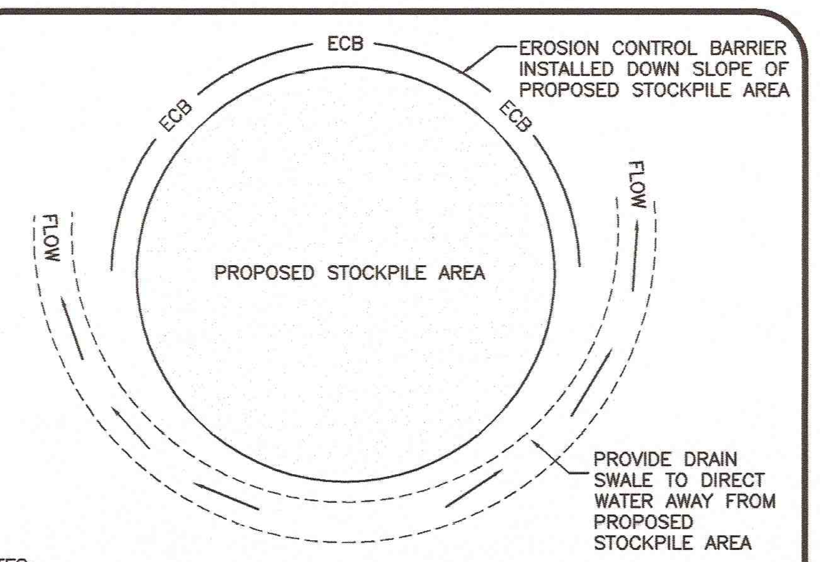

NOTES:
1. SOIL AND FILL STOCKPILES EXPECTED TO REMAIN IN PLACE FOR LESS THAN 90 DAYS SHALL BE COVERED WITH HAY AND MULCH (AT 100LBS/1,000 SF), OR WITH AN ANCHORED TARP WITHIN 7 DAYS OR PRIOR TO ANY RAINFALL.
2. SOIL AND FILL STOCKPILES EXPECTED TO REMAIN IN PLACE FOR 90 DAYS OR MORE SHALL BE SEEDED WITH WINTER RYE (FOR FALL SEEDING AT 1LB/1,000 SF) OR OATS (FOR SUMMER SEEDING AT 2LB/1,000 SF) AND THEN COVERED WITH HAY MULCH (AT 100LB/1,000 SF) OR AN ANCHORED TARP WITHIN 7 DAYS OR PRIOR TO ANY RAINFALL.

STOCKPILE PROTECTION (13)
NOT TO SCALE

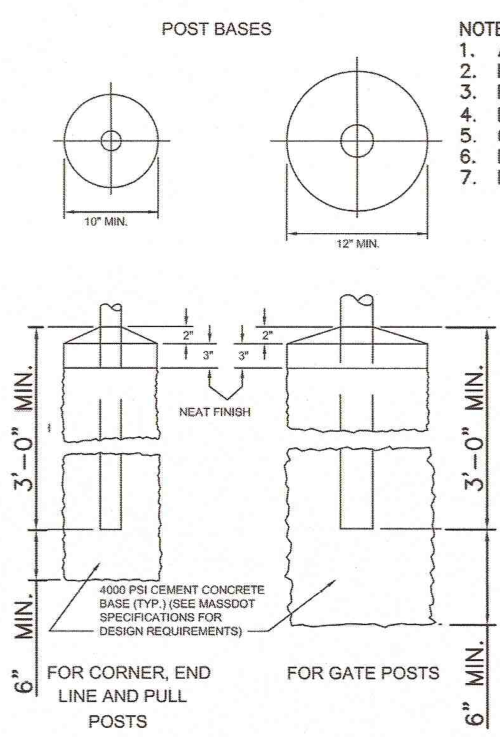

NOTES:
1. ALL MATERIALS TO BE BLACK VINYL COATED.
2. PROVIDE SHOP DRAWING FOR APPROVAL.
3. FABRIC SCREEN SHALL BE PROVIDED.
4. DOUBLE LEAF SWING GATE 20'-0" OPENING.
5. 6 FOOT FENCE HEIGHT
6. MASSDOT CONSTRUCTION DETAIL E 404.6.0
7. MASSDOT CONSTRUCTION DETAIL E 404.5.0

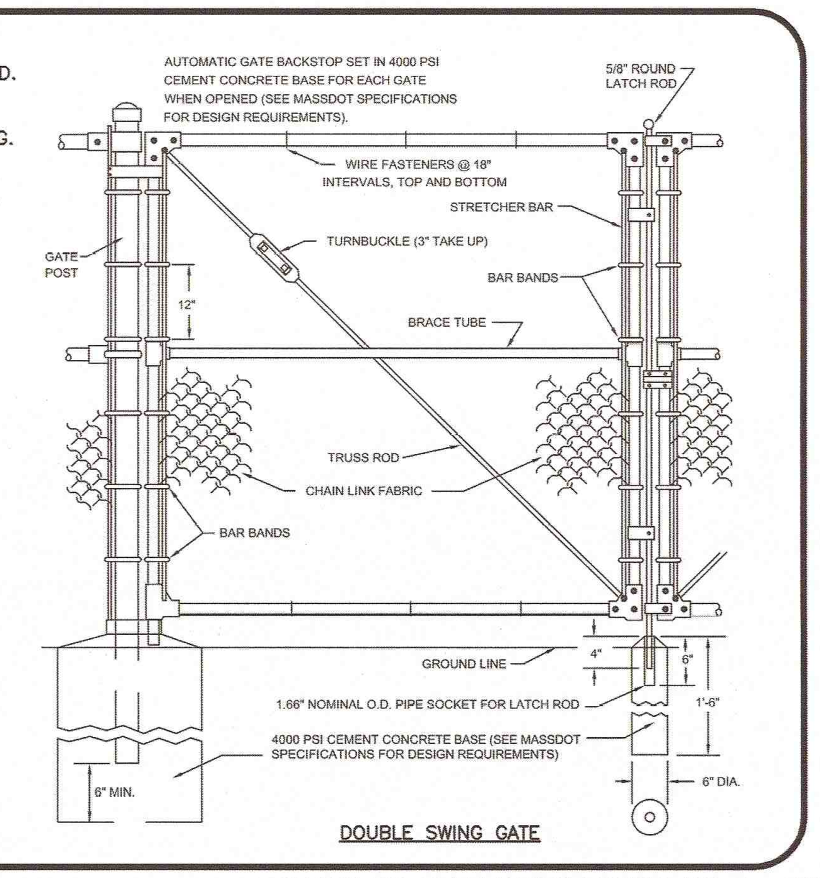

DOUBLE SWING GATE

CHAIN LINK FENCE SWING GATE DETAIL (14)
NOT TO SCALE

N:\PROJECTS\1839-02\CIVIL\DRAWINGS\CURRENT\C-1839-02 - DETAILS.DWG

ENGINEER:
ALLEN & MAJOR ASSOCIATES, INC.
civil & structural engineering ♦ land surveying
environmental consulting ♦ landscape architecture
www.allenmajor.com
100 COMMERCE WAY
P.O. BOX 2118
WOBURN MA 01888-0118
TEL: (781) 935-6889
FAX: (781) 935-2896
WOBURN, MA ♦ LAKEVILLE, MA ♦ MANCHESTER, NH

SEAL:
COMMONWEALTH OF MASSACHUSETTS
TIMOTHY J. WILLIAMS
CIVIL
No.43119
REGISTERED PROFESSIONAL ENGINEER
10/23/15

CONSULTANT:

OWNER:
MGM RESORTS INTERNATIONAL™
3260 Industrial Road, Las Vegas,NV 89109
702.692.9622 Phone 702.862.1750 Fax

MGM SPRINGFIELD
SPRINGFIELD, MA
PROJECT:
MGM SPRINGFIELD - SITE/CIVIL RECORD

REVISIONS:

NO.	DATE	ISSUE
1	10/23/15	SITE PLAN APPROVAL

THIS DRAWING HAS BEEN PREPARED IN ELECTRONIC FORMAT. CLIENT/CLIENT'S REPRESENTATIVE OR CONSULTANT MAY BE PROVIDED COPIES OF DRAWINGS AND SPECIFICATIONS ON MAGNETIC MEDIA FOR HIS/HER INFORMATION AND USE FOR SPECIFIC APPLICATION TO THIS PROJECT. DUE TO THE POTENTIAL THAT THE MAGNETIC INFORMATION MAY BE MODIFIED UNINTENTIONALLY OR OTHERWISE, ALLEN & MAJOR ASSOCIATES, INC. MAY REMOVE ALL INDICATION OF THE DOCUMENT'S AUTHORSHIP ON THE MAGNETIC MEDIA. PRINTED REPRESENTATIONS OF THE DRAWINGS AND SPECIFICATIONS ISSUED SHALL BE THE ONLY RECORD COPIES OF ALLEN & MAJOR ASSOCIATES, INC.'S WORK PRODUCT.
Copyright 2015 Allen & Major Associates, Inc. All Rights Reserved

DRAWING TITLE:
DETAILS
EROSION
CONTROL

All dimensions, levels, layouts and field conditions shall be verified at the site by the contractor before proceeding with the work.

MRID Project No.	58012MASS
Consultant Project No.	1839-02D
Date:	08/14/2015

Drawn By	Checked By	Approved By
KEA	TJW	TJW

File Name: C1839-02D

D-7

SECTIONS B-B

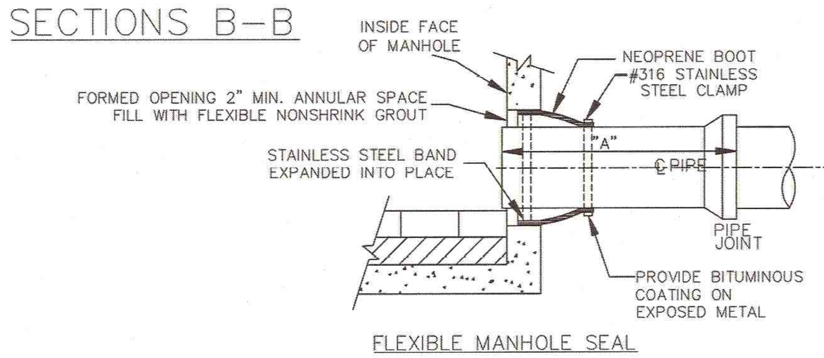

FLEXIBLE MANHOLE SEAL

MAXIMUM STUB LENGTH		
PIPE MATERIAL	"A" (MAX.)	"A" (MIN.)
RC	4'-0"	2'-0"
PVC	3'-3"	2'-0"
DI	4'-6"	2'-0"

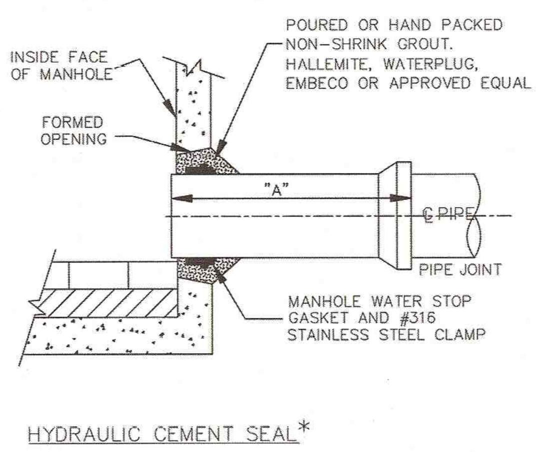

HYDRAULIC CEMENT SEAL*

*THIS METHOD REQUIRES SWSC APPROVAL

NOTES:
1. ALL MATERIALS AND INSTALLATION PROCEDURES SHALL CONFORM TO SWSC GUIDELINES AND POLICIES AND SPECIFICATIONS.
2. ALL SEWER MAIN PIPE SHOULD HAVE A MINIMUM DEPTH OF 4' FROM TOP OF PIPE TO FINISH GRADE.
3. IF 4' OF COVER IS NOT POSSIBLE PIPE SHALL BE INSULATED.
4. REINFORCED CONCRETE MANHOLE SECTIONS CONFORMING TO A.S.T.M.C478.
5. DESIGN PRECAST SECTIONS WITH FRAME AND COVER FOR AASHTO H-20 LOADING.
6. PRE-CAST CONCRETE SHALL BE 5,000 PSI @ 28 DAYS.
7. ALL BRICK SHALL BE HARD NON-POROUS CLAY.
8. ADMIXTURES, AIR & PLASTICIZERS PER ASTM C233-82.
9. REINFORCING PER ASTM A615 FOR WIRE FABRIC.
10. DESIGN LOADING PER AASHTO HS20-44, ACI 318-83; ASTM C478-82, C890-82, C913-71.
11. SWSC DETAIL S-02.1 TAKEN FROM SWSC GUIDELINES AND POLICIES DETAIL DRAWINGS, VERSION 1, DATED APRIL 1, 2008.

PRECAST CONCRETE SEWER PIPE CONNECTIONS (S-02.1)

NOT TO SCALE

1

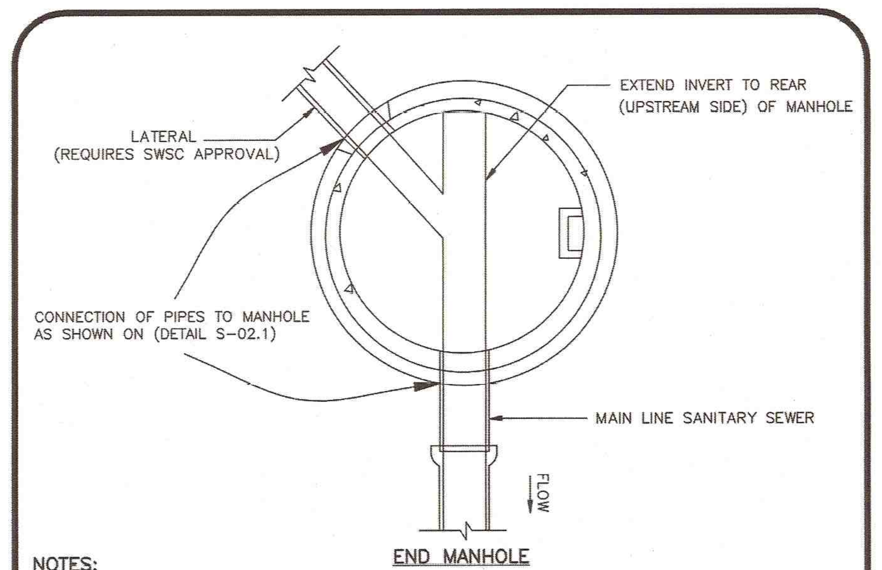

END MANHOLE

NOTES:
1. ALL MATERIALS AND INSTALLATION PROCEDURES SHALL CONFORM TO SWSC GUIDELINES AND POLICIES AND SPECIFICATIONS.
2. ALL SEWER MAIN PIPE SHOULD HAVE A MINIMUM DEPTH OF 4' FROM TOP OF PIPE TO FINISH GRADE.
3. IF 4' OF COVER IS NOT POSSIBLE PIPE SHALL BE INSULATED.
4. ALL SERVICE LINES SHALL BE PVC SDR-35 AND MIST BE A MINIMUM OF 6" DIAMETER, NO EXCEPTIONS.
5. SWSC DETAIL S-02.2 TAKEN FROM SWSC GUIDELINES AND POLICIES DETAIL DRAWINGS, VERSION 1, DATED APRIL 1, 2008.

END OF SEWER MAIN (S-02.2)

NOT TO SCALE

2

NOTES:
1. ALL MATERIALS WILL CONFORM TO SWSC SPECIFICATIONS AND INSTALLATION PROCEDURES SHALL CONFORM TO SWSC GUIDELINES AND POLICIES.
2. FRAME & COVER SHALL BE MADE FROM ASTM A48 CLASS 35B GRAY CAST IRON.
3. MIN. = MINIMUM
4. SWSC DETAIL S-02.6 TAKEN FROM SWSC GUIDELINES AND POLICIES DETAIL DRAWINGS, REVISION 1, DATED 3/11/10.

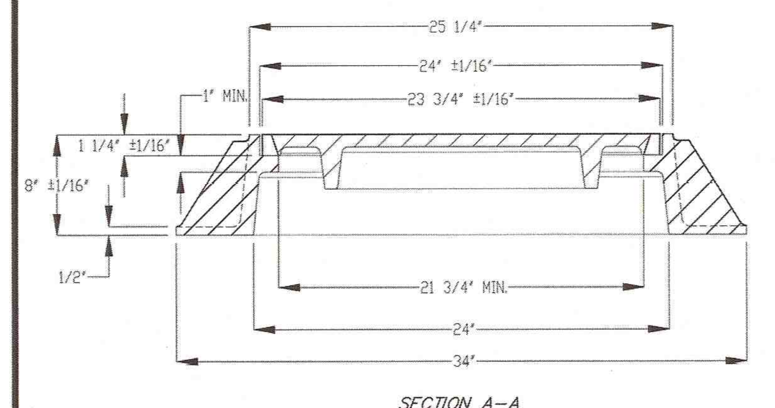

SECTION A-A

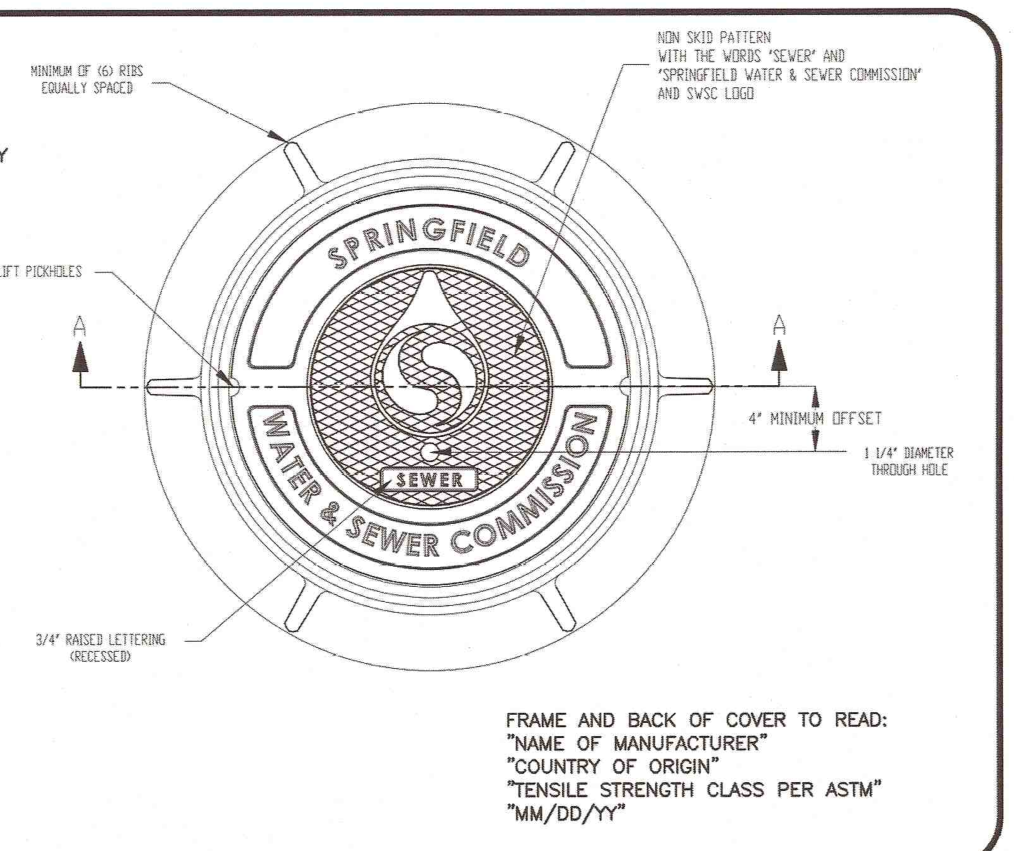

FRAME AND BACK OF COVER TO READ:
"NAME OF MANUFACTURER"
"COUNTRY OF ORIGIN"
"TENSILE STRENGTH CLASS PER ASTM"
"MM/DD/YY"

PUBLIC SEWER MANHOLE
24 X 6 INCH FRAME & COVER (S-02.6)

NOT TO SCALE

3

PLAN

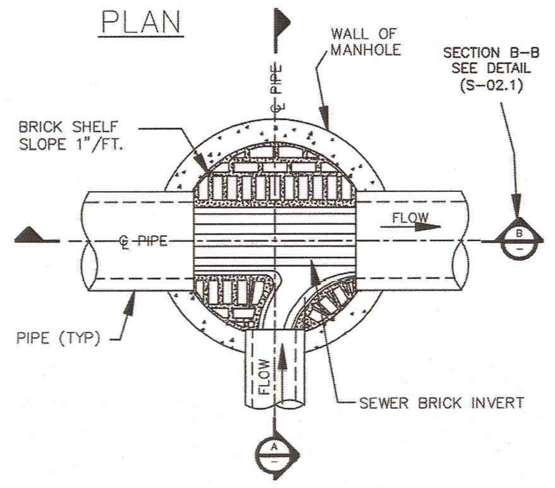

SECTION A-A

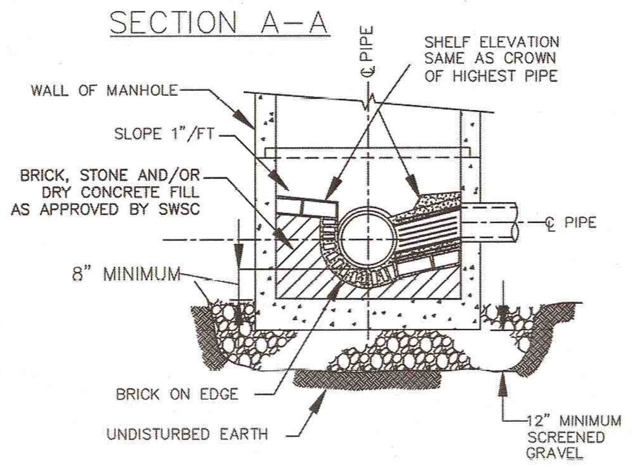

ELEVATION

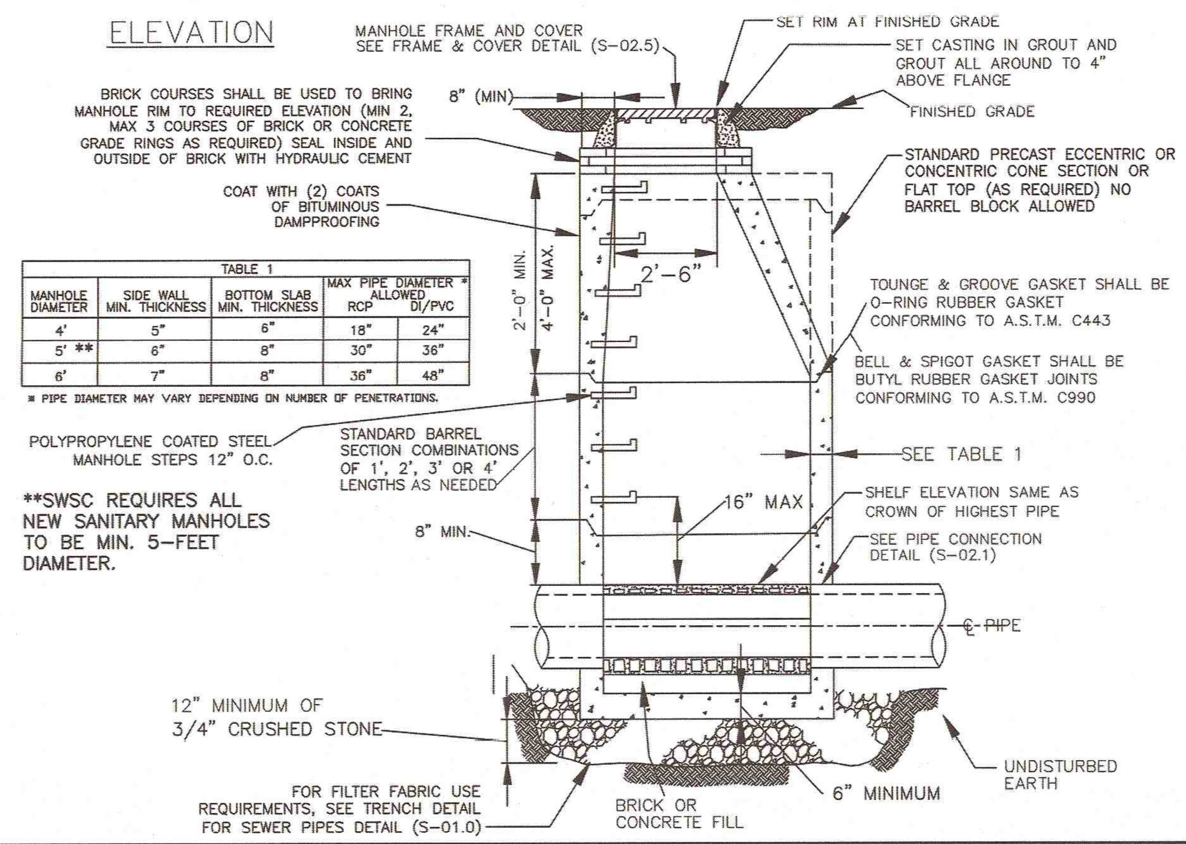

TABLE 1

MANHOLE DIAMETER	SIDE WALL MIN. THICKNESS	BOTTOM SLAB MIN. THICKNESS	MAX PIPE DIAMETER * ALLOWED RCP	DI/PVC
4'	5"	6"	18"	24"
5' **	6"	8"	30"	36"
6'	7"	8"	36"	48"

* PIPE DIAMETER MAY VARY DEPENDING ON NUMBER OF PENETRATIONS.

**SWSC REQUIRES ALL NEW SANITARY MANHOLES TO BE MIN. 5-FEET DIAMETER.

NOTES:
1. ALL MATERIALS AND INSTALLATION PROCEDURES SHALL CONFORM TO SWSC GUIDELINES AND POLICIES AND SPECIFICATIONS.
2. ALL SEWER MAIN PIPE SHOULD HAVE A MINIMUM DEPTH OF 4' FROM TOP OF PIPE TO FINISH GRADE.
3. IF 4' OF COVER IS NOT POSSIBLE PIPE SHALL BE INSULATED.
4. REINFORCED CONCRETE MANHOLE SECTIONS CONFORMING TO A.S.T.M.C478.
5. DESIGN PRECAST SECTIONS WITH FRAME AND COVER FOR AASHTO H-20 LOADING.
6. PRE-CAST CONCRETE SHALL BE 5,000 PSI @ 28 DAYS.
7. ALL BRICK SHALL BE HARD NON-POROUS CLAY.
8. ADMIXTURES, AIR & PLASTICIZERS PER ASTM C233-82.
9. REINFORCING PER ASTM A615 FOR WIRE FABRIC.
10. DESIGN LOADING PER AASHTO HS20-44, ACI 318-83; ASTM C478-82, C890-82, C913-71.
11. SWSC DETAIL S-02.0 TAKEN FROM SWSC GUIDELINES AND POLICIES DETAIL DRAWINGS, VERSION 1, DATED APRIL 1, 2008.

PRECAST CONCRETE SEWER MANHOLE (S-02.0)

NOT TO SCALE

4

NOTES:
1. ALL MATERIALS WILL CONFORM TO SWSC SPECIFICATIONS AND INSTALLATION PROCEDURES SHALL CONFORM TO SWSC GUIDELINES AND POLICIES.
2. FRAME & COVER SHALL BE MADE FROM ASTM A48 CLASS 35B GRAY CAST IRON.
3. MIN. = MINIMUM
4. SWSC DETAIL S-02.5 TAKEN FROM SWSC GUIDELINES AND POLICIES DETAIL DRAWINGS, REVISION 1, DATED 3/11/10.

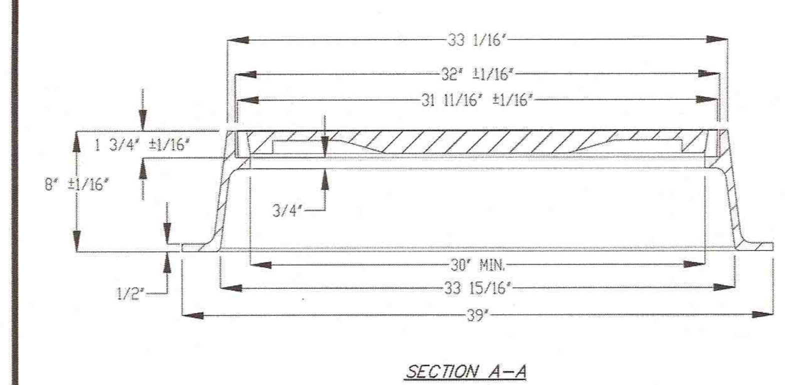

SECTION A-A

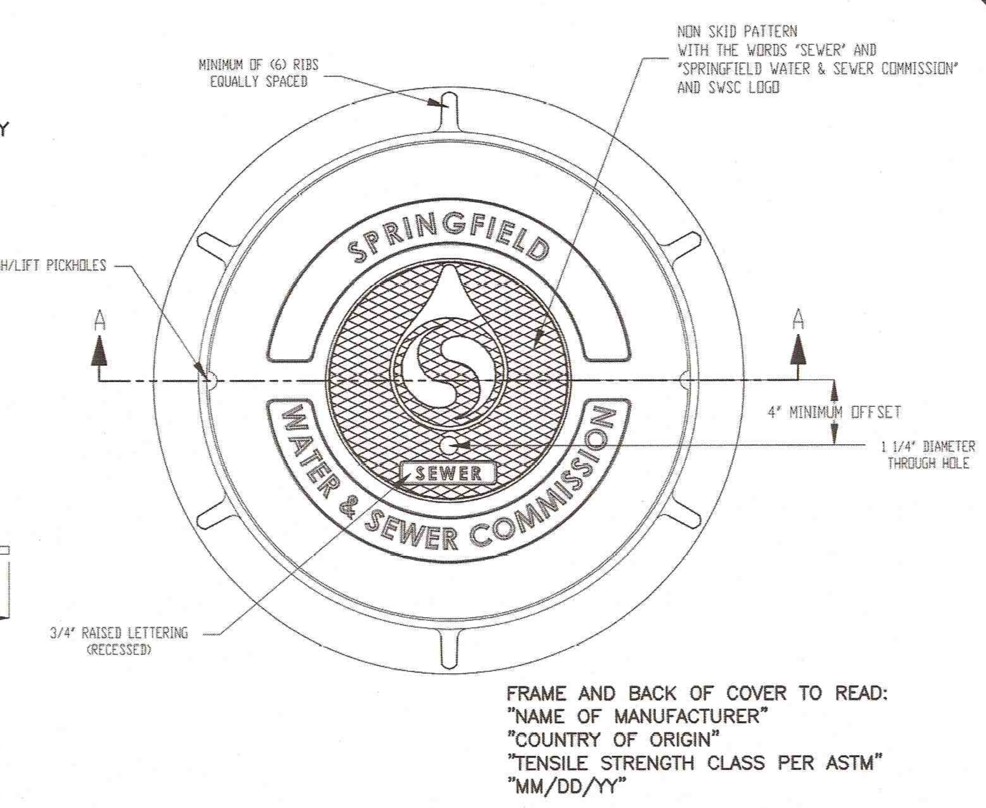

FRAME AND BACK OF COVER TO READ:
"NAME OF MANUFACTURER"
"COUNTRY OF ORIGIN"
"TENSILE STRENGTH CLASS PER ASTM"
"MM/DD/YY"

PUBLIC SEWER MANHOLE
32 X 8 INCH FRAME & COVER (S-02.5)

NOT TO SCALE

5

TABLE 1

MANHOLE DIAMETER	SIDE WALL MIN. THICKNESS	BOTTOM SLAB MIN. THICKNESS	MAX PIPE DIAMETER * ALLOWED RCP	DI/PVC
4'	5"	6"	18"	24"
5' **	6"	8"	30"	36"
6'	7"	8"	36"	48"

* PIPE DIAMETER MAY VARY DEPENDING ON NUMBER OF PENETRATIONS.

**SWSC REQUIRES ALL NEW SANITARY MANHOLES TO BE MIN. 5-FEET DIAMETER.

NOTES:
1. ALL MATERIALS AND INSTALLATION PROCEDURES SHALL CONFORM TO SWSC GUIDELINES AND POLICIES AND SPECIFICATIONS.
2. ALL SEWER MAIN PIPE SHOULD HAVE A MINIMUM DEPTH OF 4' FROM TOP OF PIPE TO FINISH GRADE.
3. IF 4' OF COVER IS NOT POSSIBLE PIPE SHALL BE INSULATED.
4. REINFORCED CONCRETE MANHOLE SECTIONS CONFORMING TO A.S.T.M.C478.
5. DESIGN PRECAST SECTIONS WITH FRAME AND COVER FOR AASHTO H-20 LOADING.
6. PRE-CAST CONCRETE SHALL BE 5,000 PSI @ 28 DAYS.
7. ALL BRICK SHALL BE HARD NON-POROUS CLAY.
8. ADMIXTURES, AIR & PLASTICIZERS PER ASTM C233-82.
9. REINFORCING PER ASTM A615 FOR WIRE FABRIC.
10. DESIGN LOADING PER AASHTO HS20-44, ACI 318-83; ASTM C478-82, C890-82, C913-71.
11. SWSC DETAIL S-02.3 TAKEN FROM SWSC GUIDELINES AND POLICIES DETAIL DRAWINGS, VERSION 1, DATED APRIL 1, 2008.

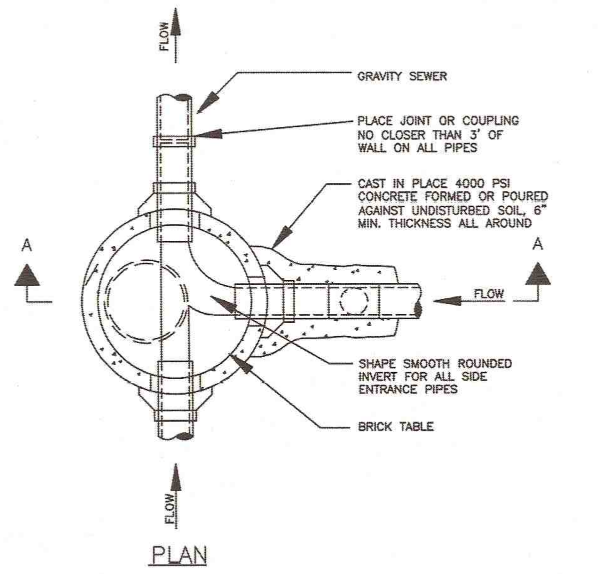

PLAN

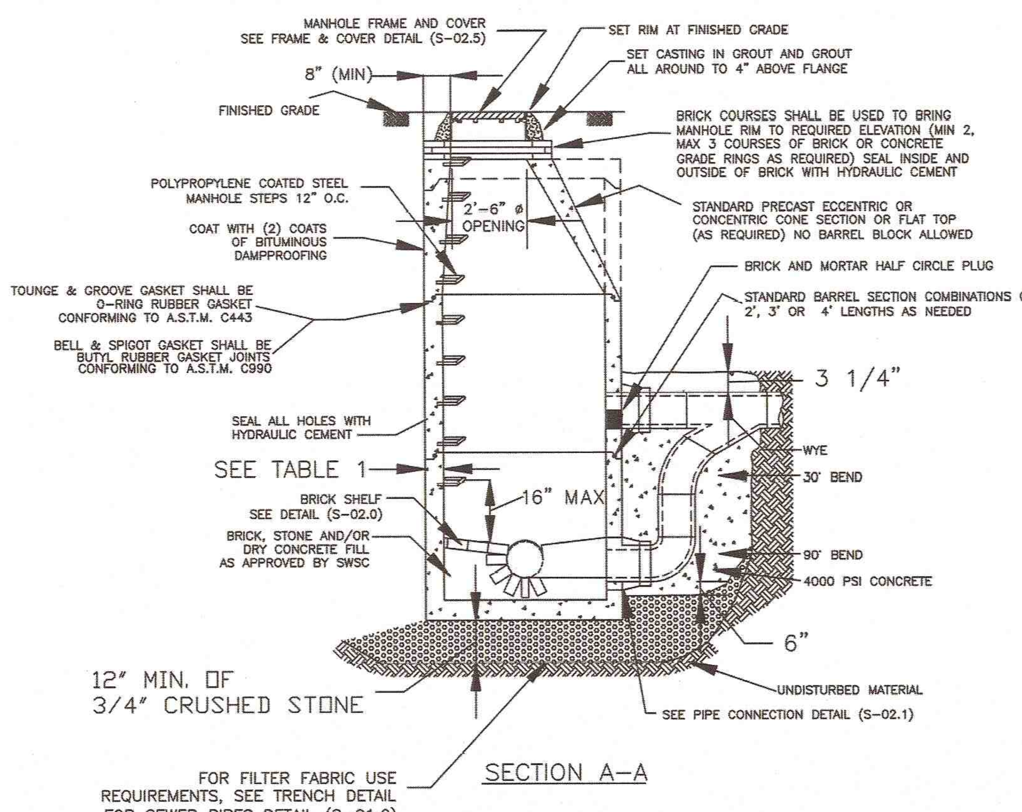

SECTION A-A

EXTERIOR DROP MANHOLE (S-02.3)

NOT TO SCALE

6

NOTES:
1. ALL MATERIALS WILL CONFORM TO SWSC SPECIFICATIONS AND INSTALLATION PROCEDURES SHALL CONFORM TO SWSC GUIDELINES AND POLICIES.
2. FRAME & COVER SHALL BE MADE FROM ASTM A48 CLASS 35B GRAY CAST IRON.
3. MIN. = MINIMUM
4. PRIVATE SEWER MANHOLES SHALL NOT CONTAIN SWSC LOGO ON FRAMES AND COVERS.

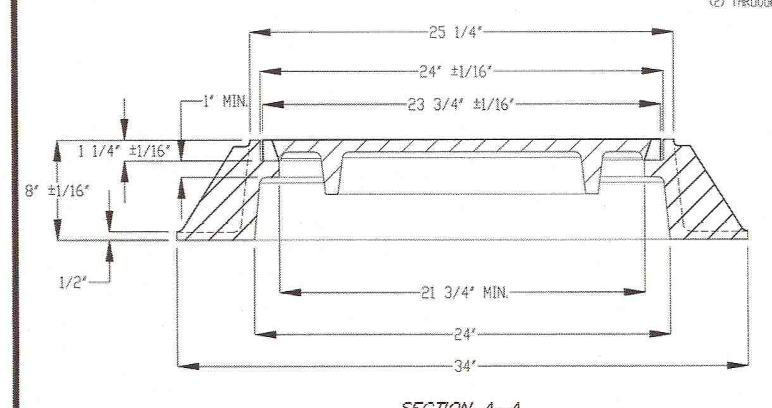

SECTION A-A

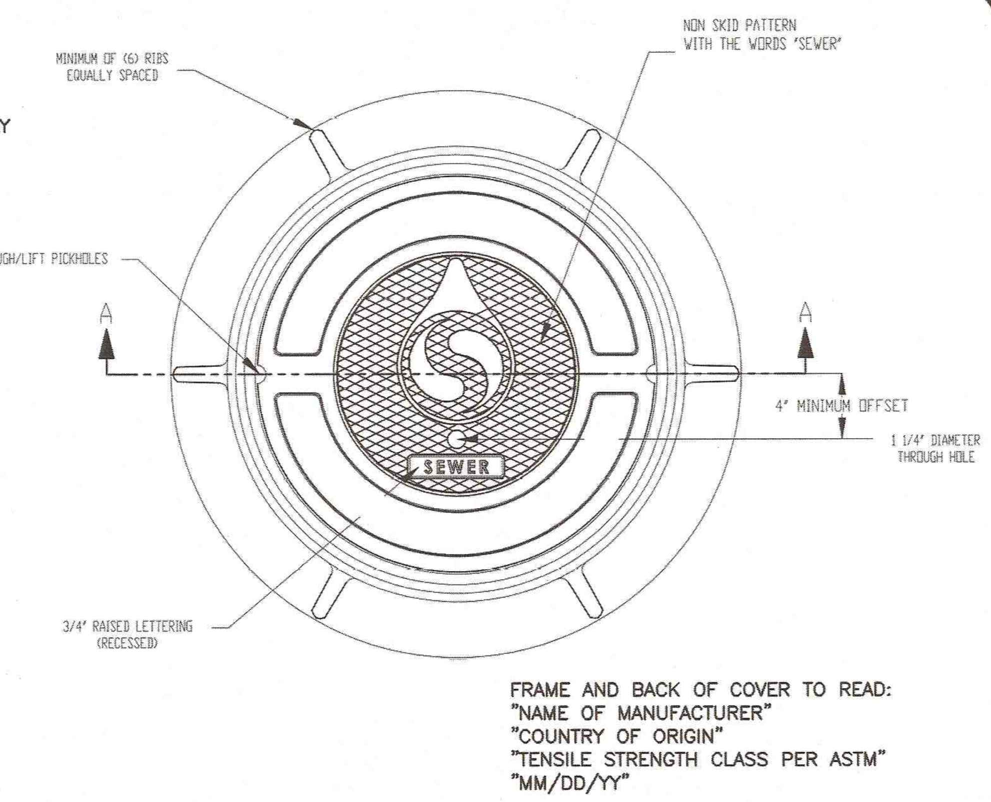

FRAME AND BACK OF COVER TO READ:
"NAME OF MANUFACTURER"
"COUNTRY OF ORIGIN"
"TENSILE STRENGTH CLASS PER ASTM"
"MM/DD/YY"

PRIVATE SEWER MANHOLE
24 X 6 INCH FRAME & COVER

NOT TO SCALE

7

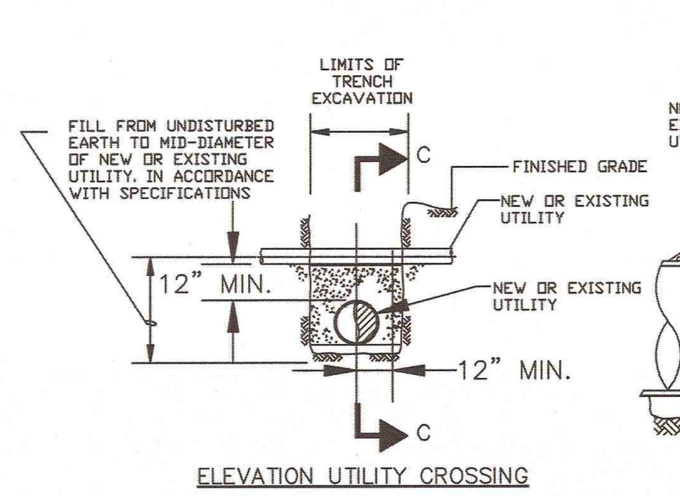

ELEVATION UTILITY CROSSING

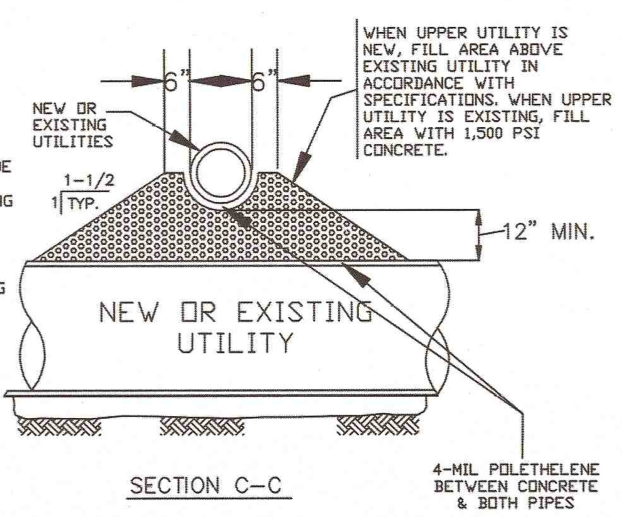

SECTION C-C

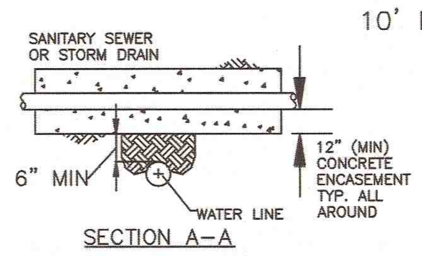

SECTION A-A

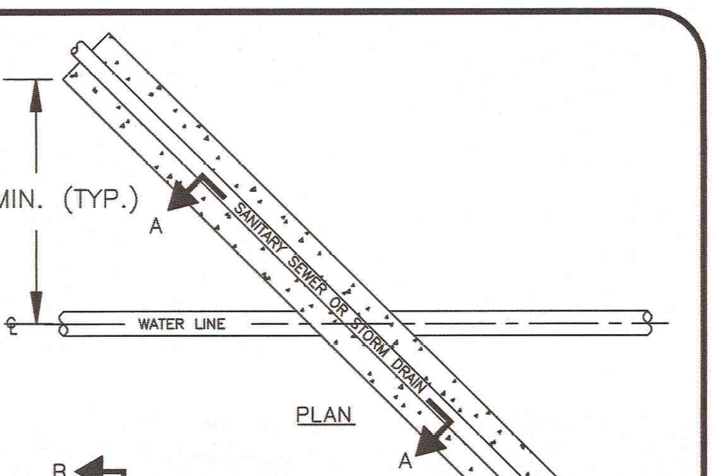

PLAN

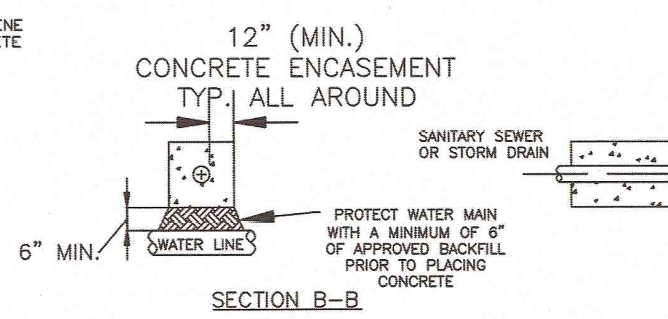

SECTION B-B

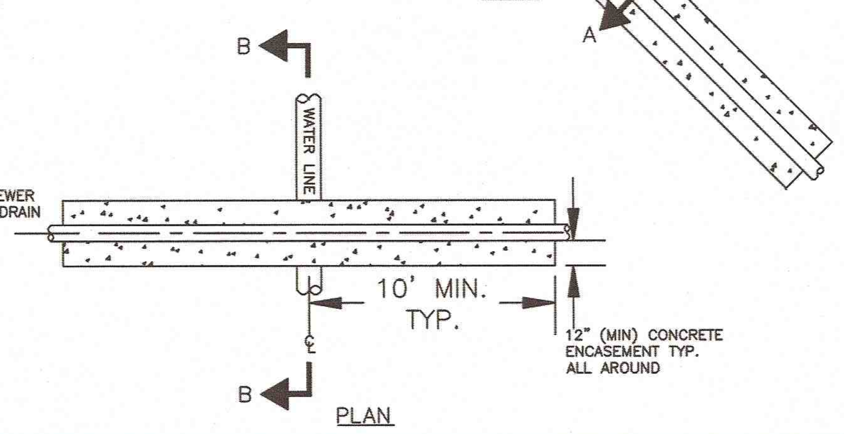

PLAN

NOTES:
1. ALL MATERIALS WILL CONFORM TO SWSC SPECIFICATIONS AND INSTALLATION PROCEDURES SHALL CONFORM TO SWSC GUIDELINES & POLICIES AND POLICIES.
2. ALL SEWER MAIN PIPE SHOULD HAVE A MINIMUM DEPTH OF 4' FROM TOP OF PIPE TO FINISH GRADE.
3. IF 4' OF COVER IS NOT POSSIBLE PIPE SHALL BE INSULATED.
4. IF DEPTH OF COVER ABOVE CONCRETE ENCASEMENT IS GREATER THAN 5'-0" REINFORCEMENT STEEL SHALL BE USED.
5. SWSC DETAIL S-03.0 TAKEN FROM SWSC GUIDELINES AND POLICIES DETAIL DRAWINGS, VERSION 1, DATED APRIL 1, 2008.

UTILITY CROSSING DETAIL (S-03.0)

NOT TO SCALE

8

NOTES:
1. ALL MATERIALS WILL CONFORM TO SWSC SPECIFICATIONS AND INSTALLATION PROCEDURES SHALL CONFORM TO SWSC GUIDELINES AND POLICIES.
2. FRAME & COVER SHALL BE MADE FROM ASTM A48 CLASS 35B GRAY CAST IRON.
3. MIN. = MINIMUM
4. PRIVATE SEWER MANHOLES SHALL NOT CONTAIN SWSC LOGO ON FRAMES AND COVERS.

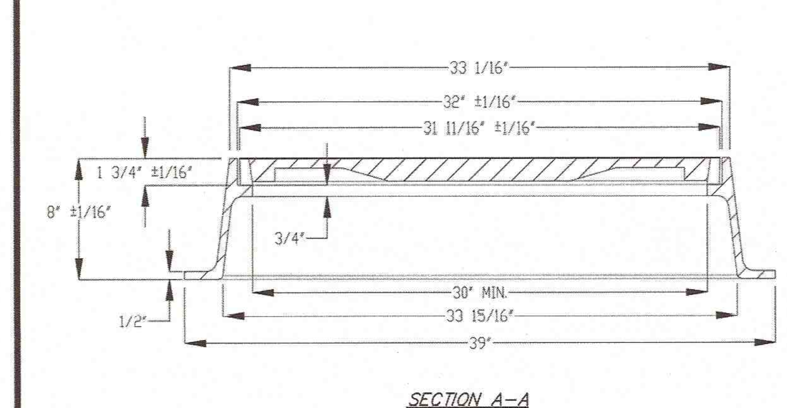

SECTION A-A

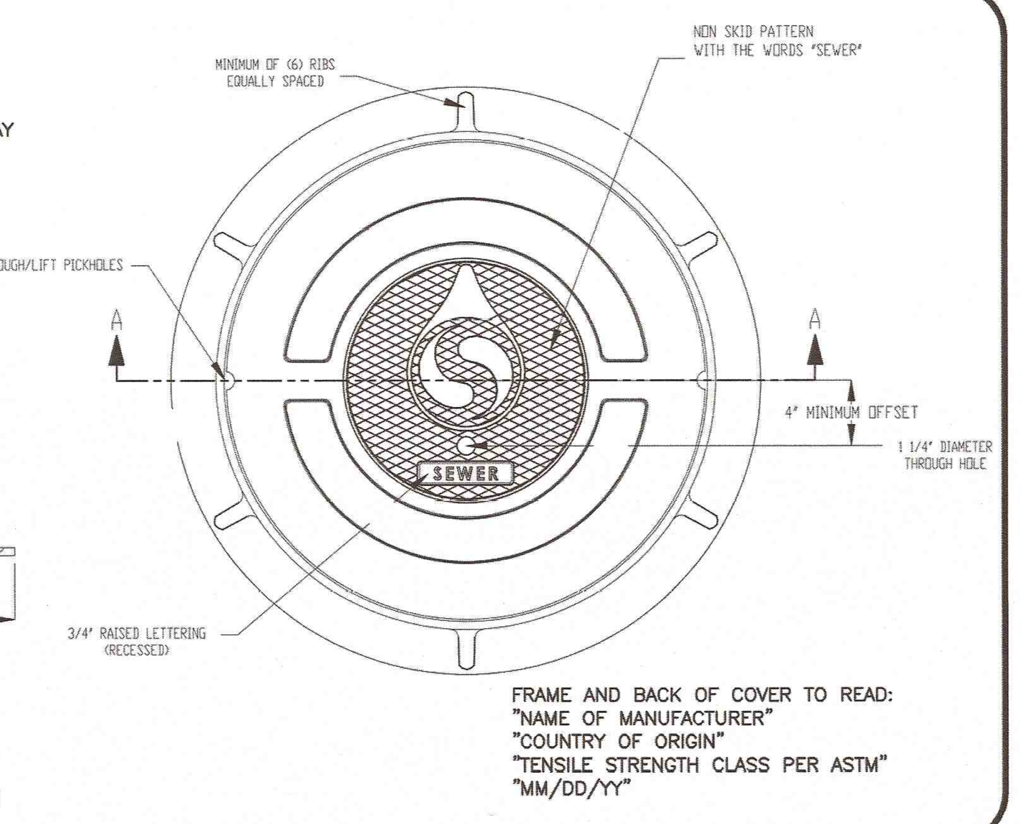

FRAME AND BACK OF COVER TO READ:
"NAME OF MANUFACTURER"
"COUNTRY OF ORIGIN"
"TENSILE STRENGTH CLASS PER ASTM"
"MM/DD/YY"

PRIVATE SEWER MANHOLE
32 X 8 INCH FRAME & COVER

NOT TO SCALE

9

N:\PROJECTS\1839-02\CIVIL\DRAWINGS\CURRENT\C-1839-02 - DETAILS.DWG

ENGINEER:

ALLEN & MAJOR ASSOCIATES, INC.
civil & structural engineering ♦ land surveying
environmental consulting ♦ landscape architecture
www.allenmajor.com
100 COMMERCE WAY
P.O. BOX 2118
WOBURN MA 01888-0118
TEL: (781) 935-6889
FAX: (781) 935-2896
WOBURN, MA ♦ LAKEVILLE, MA ♦ MANCHESTER, NH

SEAL:

COMMONWEALTH OF MASSACHUSETTS
TIMOTHY J. WILLIAMS
CIVIL
No.43119
REGISTERED PROFESSIONAL ENGINEER
10/23/15

CONSULTANT:

OWNER:

MGM RESORTS INTERNATIONAL™
3260 Industrial Road, Las Vegas,NV 89109
702.692.9622 Phone 702.862.1750 Fax

MGM SPRINGFIELD
SPRINGFIELD, MA

PROJECT:
MGM SPRINGFIELD - SITE/CIVIL RECORD

REVISIONS:

NO.	DATE	ISSUE
1	10/23/15	SITE PLAN APPROVAL

THIS DRAWING HAS BEEN PREPARED IN ELECTRONIC FORMAT. CLIENT/CLIENT'S REPRESENTATIVE OR CONSULTANT MAY BE PROVIDED COPIES OF DRAWINGS AND SPECIFICATIONS ON MAGNETIC MEDIA FOR HIS/HER INFORMATION AND USE FOR SPECIFIC APPLICATION TO THIS PROJECT. DUE TO THE POTENTIAL THAT THE MAGNETIC INFORMATION MAY BE MODIFIED UNINTENTIONALLY OR OTHERWISE, ALLEN & MAJOR ASSOCIATES, INC. MAY REMOVE ALL INDICATION OF THE DOCUMENT'S AUTHORSHIP ON THE MAGNETIC MEDIA. PRINTED REPRESENTATIONS OF THE DRAWINGS AND SPECIFICATIONS ISSUED SHALL BE THE ONLY RECORD COPIES OF ALLEN & MAJOR ASSOCIATES, INC.'S WORK PRODUCT.

Copyright 2015 Allen & Major Associates, Inc.
All Rights Reserved

DRAWING TITLE:

DETAILS
SEWER

All dimensions, levels, layouts and field conditions shall be verified at the site by the contractor before proceeding with the work.

MRID Project No.	58012MASS
Consultant Project No.	1839-02D
Date:	08/14/2015

Drawn By	Checked By	Approved By
KEA	TJW	TJW

File Name: C1839-02D

D-8

TOTAL STONE BEDDING WRAP FILTER FABRIC REQUIREMENT		
	SOIL TYPE	
	SILT OR CLAY	GRANULAR SOIL
ABOVE GROUND WATER	FILTER FABRIC NOT REQUIRED	FILTER FABRIC NOT REQUIRED
BELOW GROUND WATER	FILTER FABRIC REQUIRED	FILTER FABRIC NOT REQUIRED
2' OVERLAP MINIMUM OF FILTER FABRIC AT TOP OF BEDDING		

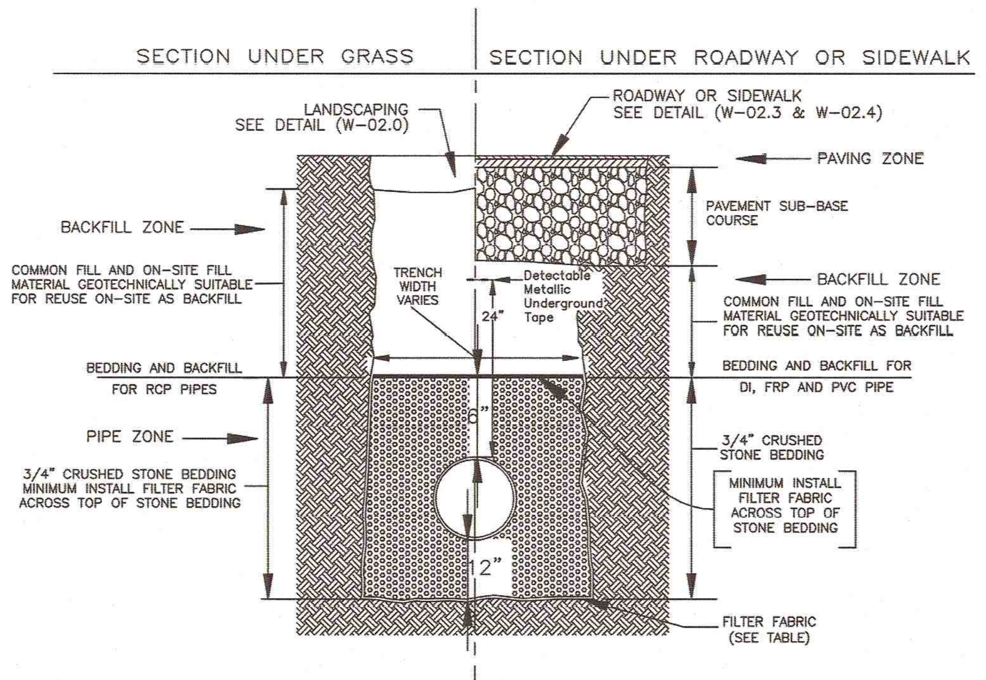

NOTES:
1. ALL MATERIALS AND INSTALLATION PROCEDURES SHALL CONFORM TO SWSC GUIDELINES AND POLICIES AND SPECIFICATIONS.
2. ALL SEWER MAIN PIPE SHOULD HAVE A MINIMUM DEPTH OF 4' FROM TOP OF PIPE TO FINISH GRADE.
3. IF 4' OF COVER IS NOT POSSIBLE PIPE SHALL BE INSULATED.
4. ALL SERVICE LINES SHALL BE PVC SDR-35 AND MIST BE A MINIMUM OF 6" DIAMETER, NO EXCEPTIONS.
5. SWSC DETAIL S-01.0 TAKEN FROM SWSC GUIDELINES AND POLICIES DETAIL DRAWINGS, VERSION 1, DATED APRIL 1, 2008.

TRENCH DETAIL FOR SEWER PIPES (S-01.0) (1)
NOT TO SCALE

NOTES:
1. ALL MATERIALS WILL CONFORM TO SWSC SPECIFICATIONS AND INSTALLATION PROCEDURES SHALL CONFORM TO SWSC GUIDELINES & POLICIES AND POLICIES.
2. ALL SEWER MAIN PIPE SHOULD HAVE A MINIMUM DEPTH OF 4' FROM TOP OF PIPE TO FINISH GRADE.
3. IF 4' OF COVER IS NOT POSSIBLE PIPE SHALL BE INSULATED.
4. ALL SERVICE LINES SHALL BE PVC SDR-35 AND MUST BE A MINIMUM OF 6" DIAMETER, NO EXCEPTIONS.
5. SWSC DETAIL S-04.0 TAKEN FROM SWSC GUIDELINES AND POLICIES DETAIL DRAWINGS, VERSION 1, DATED APRIL 1, 2008.

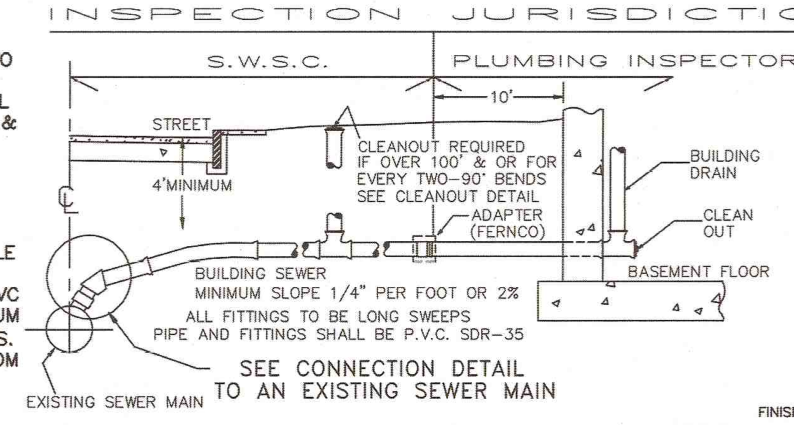

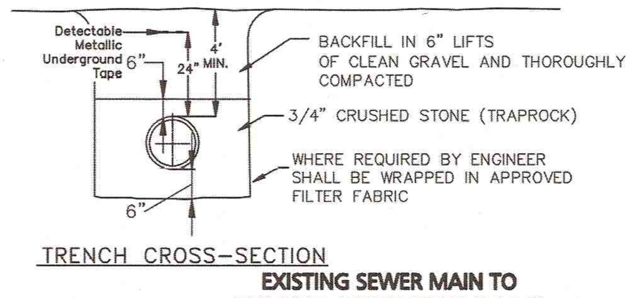

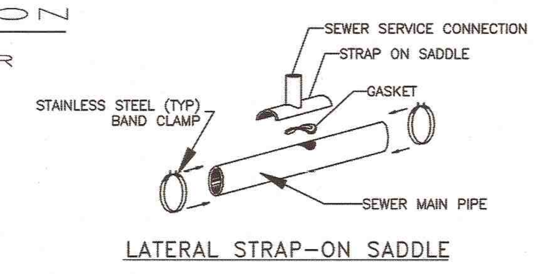

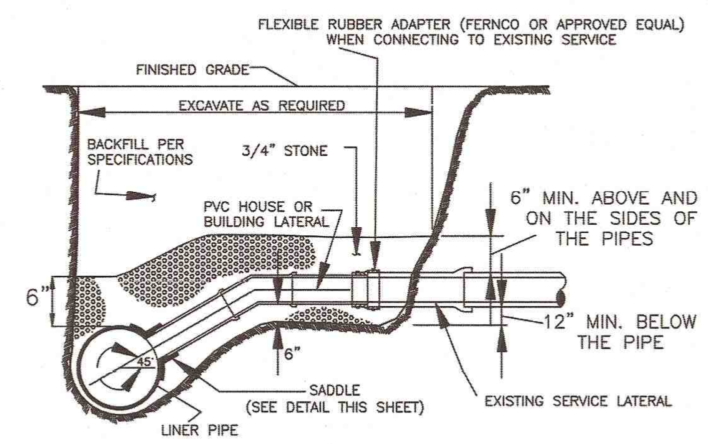

EXISTING SEWER MAIN TO BUILDING CONNECTION (S-04.0) (2)
NOT TO SCALE

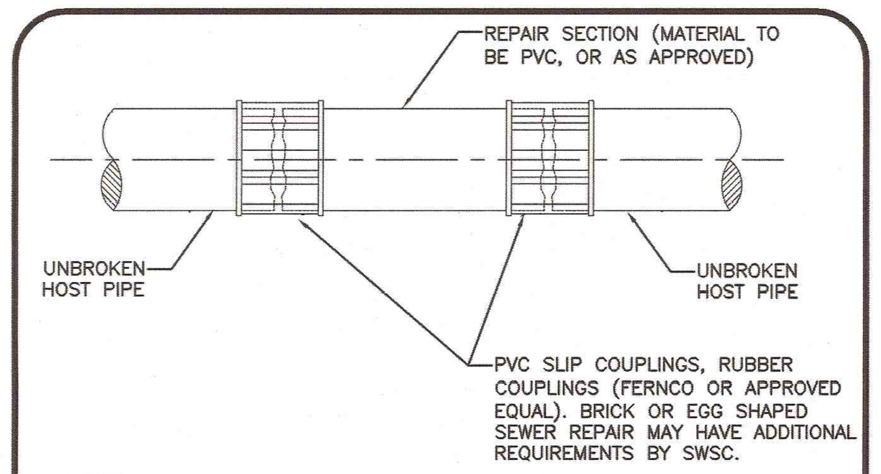

NOTES:
1. ALL MATERIALS WILL CONFORM TO SWSC SPECIFICATIONS AND INSTALLATION PROCEDURES SHALL CONFORM TO SWSC GUIDELINES & POLICIES AND POLICIES.
2. ALL SEWER MAIN PIPE SHOULD HAVE A MINIMUM DEPTH OF 4' FROM TOP OF PIPE TO FINISH GRADE.
3. IF 4' OF COVER IS NOT POSSIBLE PIPE SHALL BE INSULATED.
4. SEWER REPAIR SECTION MATERIAL SHALL BE THE SAME MATERIAL AS THE HOST PIPE, OR AS APPROVED BY SWSC.
5. REPAIR SECTION SHALL BE SIZED TO BUTT AGAINST THE HOST PIPES.
6. SWSC DETAIL S-05.0 TAKEN FROM SWSC GUIDELINES AND POLICIES DETAIL DRAWINGS, VERSION 1, DATED APRIL 1, 2008.

BUILDING AND MAINLINE SEWER REPAIR (S-05.0) (3)
NOT TO SCALE

NOTES:
1. ALL MATERIALS WILL CONFORM TO SWSC SPECIFICATIONS AND INSTALLATION PROCEDURES SHALL CONFORM TO SWSC GUIDELINES & POLICIES AND POLICIES.
2. ALL SEWER MAIN PIPE SHOULD HAVE A MINIMUM DEPTH OF 4' FROM TOP OF PIPE TO FINISH GRADE.
3. IF 4' OF COVER IS NOT POSSIBLE PIPE SHALL BE INSULATED.
4. ALL SERVICE LINES SHALL BE PVC SDR-35 AND MUST BE A MINIMUM OF 6" DIAMETER, NO EXCEPTIONS.
5. SWSC DETAIL S-04.1 TAKEN FROM SWSC GUIDELINES AND POLICIES DETAIL DRAWINGS, VERSION 1, DATED APRIL 1, 2008.

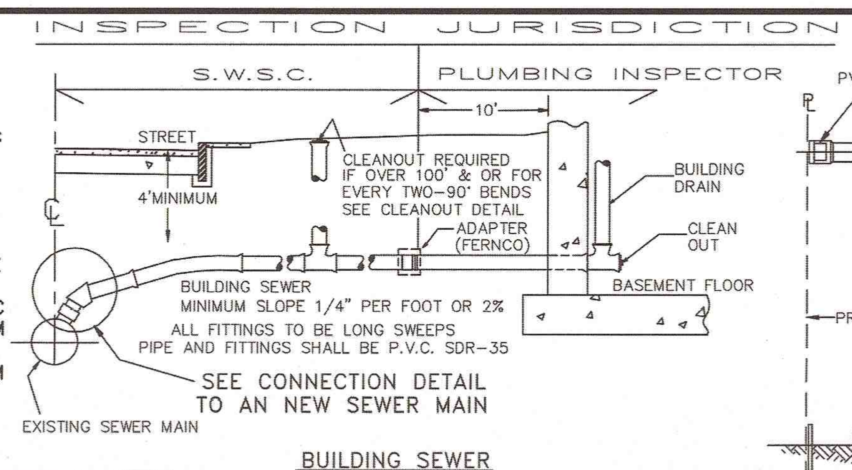

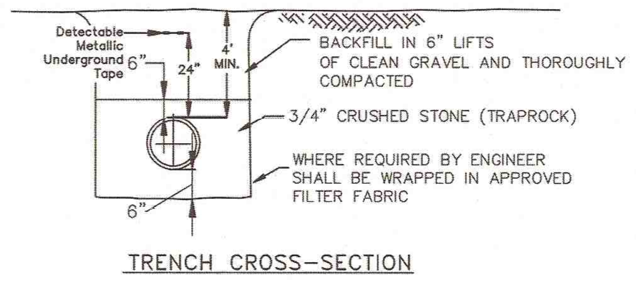

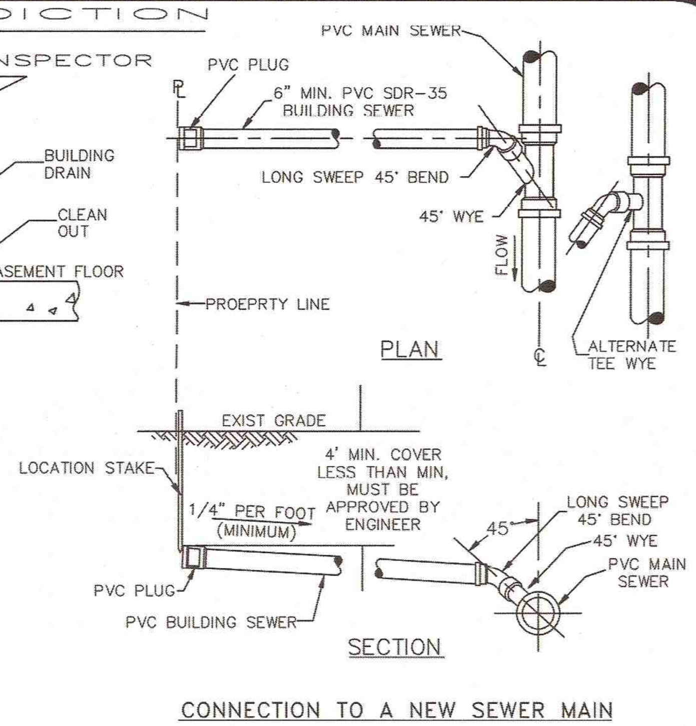

EXISTING SEWER MAIN TO BUILDING CONNECTION (S-04.1) (4)
NOT TO SCALE

NOTES:
1. ALL MATERIALS WILL CONFORM TO SWSC SPECIFICATIONS AND INSTALLATION PROCEDURES SHALL CONFORM TO SWSC GUIDELINES & POLICIES AND POLICIES.
2. ALL SEWER MAIN PIPE SHOULD HAVE A MINIMUM DEPTH OF 4' FROM TOP OF PIPE TO FINISH GRADE.
3. IF 4' OF COVER IS NOT POSSIBLE PIPE SHALL BE INSULATED.
4. ALL SERVICE LINES SHALL BE PVC SDR-35 AND MUST BE A MINIMUM OF 6" DIAMETER, NO EXCEPTIONS.
5. SWSC DETAIL S-04.4 TAKEN FROM SWSC GUIDELINES AND POLICIES DETAIL DRAWINGS, VERSION 1, DATED APRIL 1, 2008.

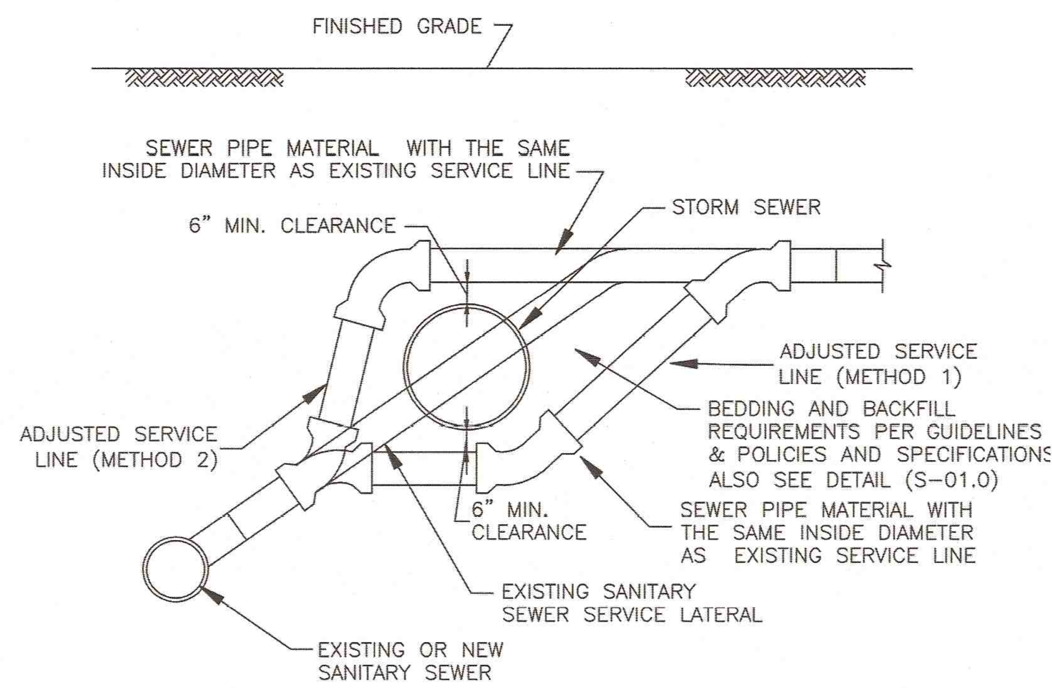

BUILDING CONNECTION TO SEWER MAIN WITH CONFLICTS (S-04.4) (5)
NOT TO SCALE

NOTES:
1. ALL MATERIALS WILL CONFORM TO SWSC SPECIFICATIONS AND INSTALLATION PROCEDURES SHALL CONFORM TO SWSC GUIDELINES & POLICIES AND POLICIES.
2. ALL SEWER MAIN PIPE SHOULD HAVE A MINIMUM DEPTH OF 4' FROM TOP OF PIPE TO FINISH GRADE.
3. IF 4' OF COVER IS NOT POSSIBLE PIPE SHALL BE INSULATED.
4. ALL SERVICE LINES SHALL BE PVC SDR-35 AND MUST BE A MINIMUM OF 6" DIAMETER, NO EXCEPTIONS.
5. CLEAN OUT PIPE DIAMETER SHALL BE THE SAME AS THE SEWER LINE AT THE WYE.
6. SWSC DETAIL S-04.2 TAKEN FROM SWSC GUIDELINES AND POLICIES DETAIL DRAWINGS, VERSION 1, DATED APRIL 1, 2008.

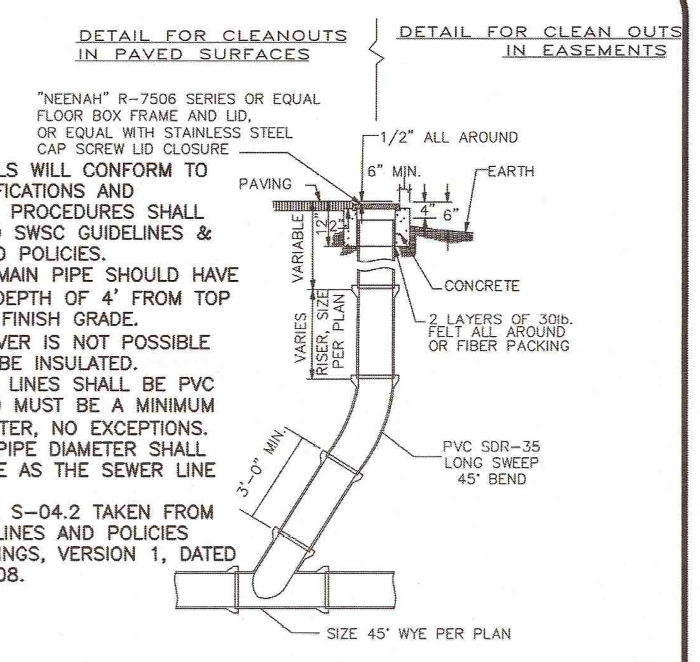

* REQUIRED -FOR ALL SERVICES OVER 100' AND/OR FOR EVERY 2 BENDS

CLEAN OUT WITH SWEEP (S-04.2) (6)
NOT TO SCALE

NOTES:
1. ALL MATERIALS WILL CONFORM TO SWSC SPECIFICATIONS AND INSTALLATION PROCEDURES SHALL CONFORM TO SWSC GUIDELINES & POLICIES AND POLICIES.
2. REMOVE EXISTING PIPE AND INSTALL NEW PIPE. CONTRACTOR SHALL MATCH EXISTING INVERT AND MINIMIZE DISTURBANCE TO THE MANHOLE.
3. INSTALL CONTROLLED DENSITY FILL (CDF) 4' MINIMUM FROM THE EXTERIOR OF THE EXISTING COMBINED SEWER OR MANHOLE IN THE HORIZONTAL PLAN.

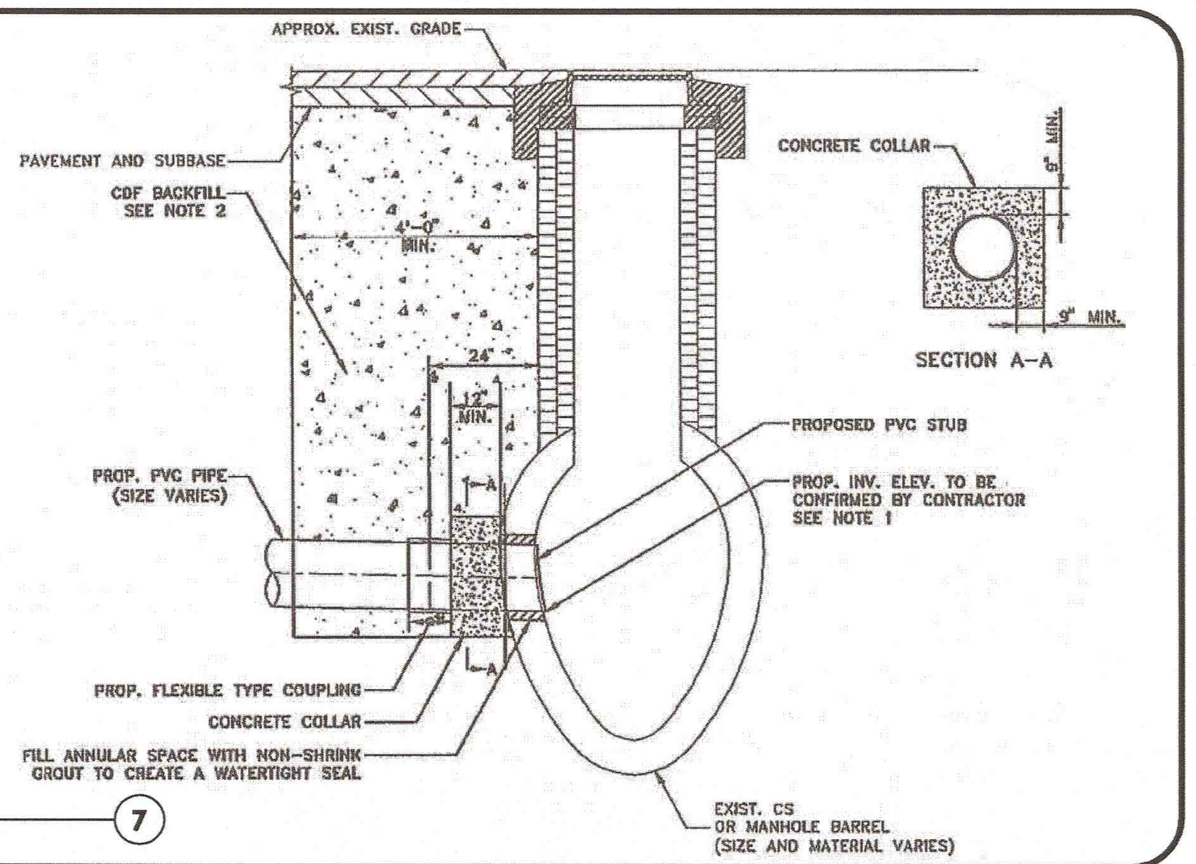

TYPICAL CONCRETE COLLAR CONNECTION TO EXISTING BRICK MANHOLE (7)
NOT TO SCALE

NOT USED (8)
NOT TO SCALE

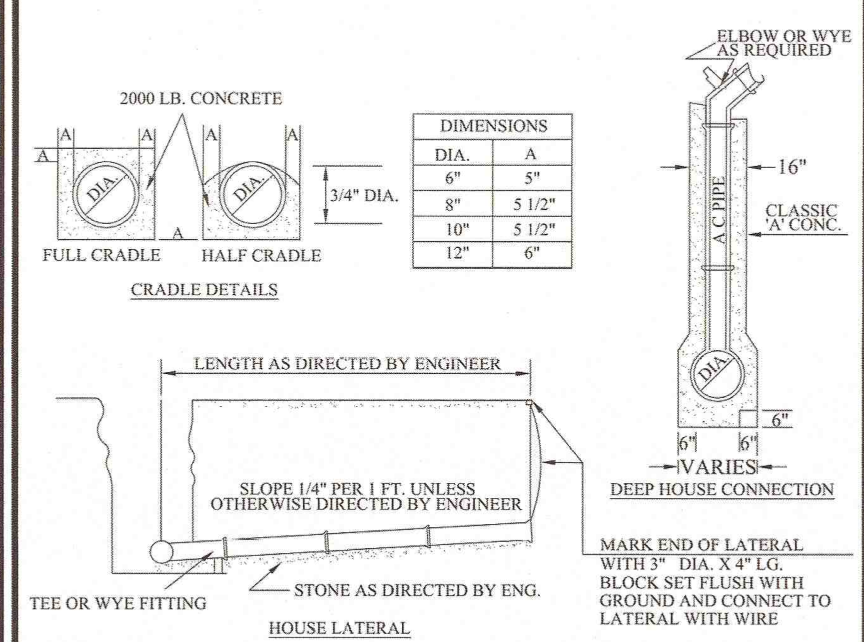

CITY OF SPRINGFIELD SEWER CONNECTION (9)
NOT TO SCALE

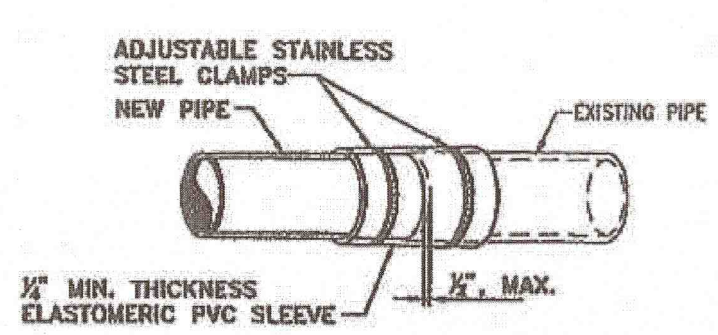

TYPICAL SEWER COUPLING (10)
NOT TO SCALE

NOT USED (11)
NOT TO SCALE

PIPE MATERIAL NOTES:
1. NO-HUB CAST IRON WITH PRODUCT-APPROVED STAINLESS STEEL CLAMPS.
2. SERVICE WEIGHT CAST IRON WITH PRODUCT-APPROVED RESILIENT GASKETS OR LEAD AND OAKUM JOINTS.
3. EXTRA HEAVY CAST IRON WITH PRODUCT-APPROVED RESILIENT GASKETS OR LEAD AND OAKUM JOINTS.

MWRA INSPECTION NOTES:
1. AT LEAST 10 DAYS PRIOR TO INSTALLATION CONTRACTOR SHALL SUBMIT A "NOTIFICATION OF PROPOSED GAS/OIL SEPARATOR INSTALLATION" TO THE MWRA PER THE MASSACHUSETTS UNIFORM PLUMBING CODE AND THE MWRA'S SEWER USE REGULATIONS. FOR ADDITIONAL INFORMATION OR TO REQUEST AN INSPECTION PLEASE CONTACT THOMAS J. COFFEY, JR. (MWRA SOURCE COORDINATOR) @ (617)-305-5624.
2. PLUMBING SHALL BE INSTALLED, BUT STRUCTURE SHALL NOT BE BACKFILLED PRIOR TO MWRA INSPECTION.
3. MORTAR THE JOINTS (NO RUBBER BOOTS ALLOWED - HYDRAULIC CEMENT ONLY).
4. THE STRUCTURES SEAM MUST BE COMPLETELY VISIBLE AROUND THE ENTIRE STRUCTURE FOR INSPECTION. ADDITIONALLY THE AREA ONE FOOT BELOW THE OUTLET PIPE MUST ALSO BE VISIBLE. FOR INSPECTION.
5. OUTLET LINE SHALL BE PLUGGED (ON THE OUTSIDE) WHERE IT CAN BE REMOVED ONCE IT IS CONFIRMED THAT THE STRUCTURE HAS NO LEAKS.
6. THE CONTRACTOR SHALL FILL THE STRUCTURE WITH WATER AND CONFIRM THAT THE THERE ARE NO LEAKS PRIOR TO SCHEDULING THE MWRA INSPECTION. THE CONTRACTOR SHOULD NOTE THAT THE MWRA INSPECTOR WILL BE SPECIFICALLY LOOKING AT THE OUTLET PIPE "45 DEGREE ANGLE" AND UNDERSTANDS THAT IT IS PARTICULARLY DIFFICULT TO SEAL. SO THE CONTRACTOR SHOULD BE CAREFUL WHEN MORTARING THE JOINT. NOTE THE INSPECTOR WILL WANT TO INSPECT THE CONNECTION WITH THE TANK 1' BELOW THAT JOINT.
7. ONCE ON SITE, THE INSPECTOR WILL FIRST INSPECT THE STRUCTURE COMPLETELY FULL TO INSURE IT HAS NO LEAKS. THE INSPECTOR WILL THEN REQUIRE THAT THE OUTLET PIPE PLUG BE REMOVED TO OBSERVE THE WATER LEVEL. THE WATER LEVEL MUST BE OBSERVED AT LEAST 4" BELOW THE INLET PIPE.
8. THE CONTRACTOR MUST HAVE A 2" PUMP ON-SITE DURING THE INSPECTION TO ALLOW THE INSPECTOR TO VERIFY THE INTERIOR MEASUREMENT OF THE TANK FOR CODE COMPLIANCE.
9. THE OUTLET PIPE MUST NOT STICK INTO THE STRUCTURE CHAMBER ANY MORE THAN ILLUSTRATED.

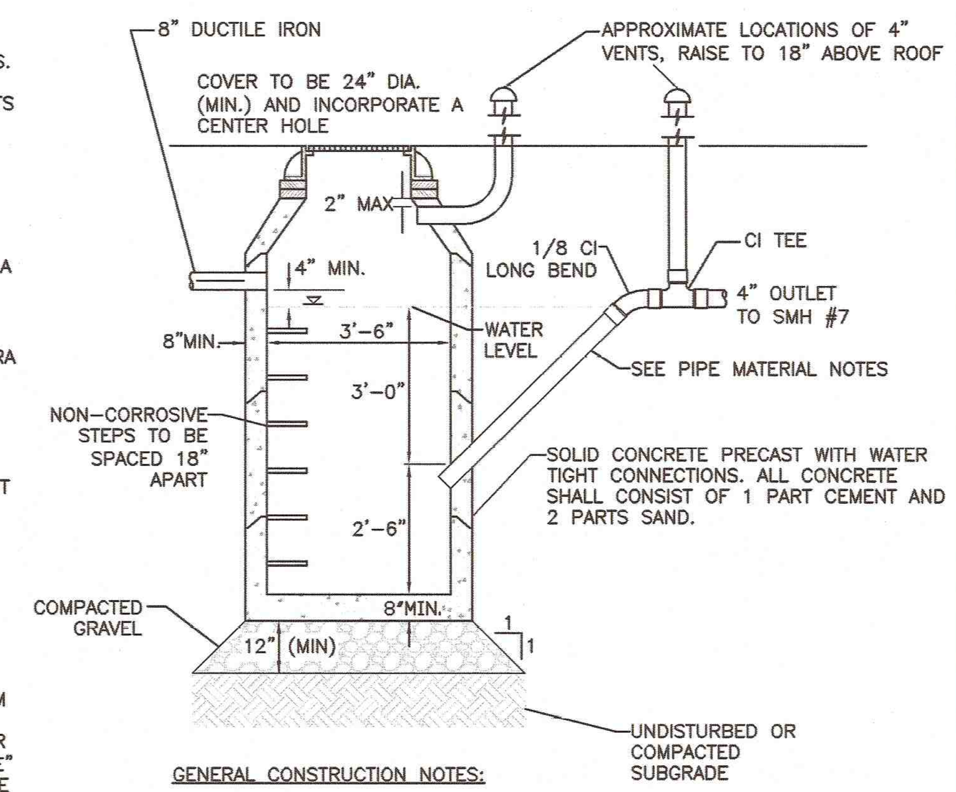

GENERAL CONSTRUCTION NOTES:
1. SEPARATOR TO BE LOCATED OUTSIDE WHERE POSSIBLE, WHEN LOCATED OUTSIDE, MANHOLE SHALL HAVE A CENTER HOLE.
2. SEPARATOR SHALL BE LOCATED AND CONSTRUCTED TO PREVENT SURFACE OR SUB-SURFACE WATER FROM ENTERING.
3. OUTLET TO BE BELOW FROST LINE.
4. SEPARATOR MUST BE FILLED WITH CLEAN WATER AND LEAK TESTED BEFORE BEING INTRODUCED INTO SERVICE.
5. OIL AND GAS TO BE REMOVED BEFORE CLEANING AND SHALL NOT BE DISCHARGED TO THE SEWER THROUGH ANY FIXTURES.
6. INLET SHALL BE SET A MINIMUM OF THREE FEET BELOW GRADE

GAS / OIL SEPARATOR (12)
NOT TO SCALE

N:\PROJECTS\1839-02\CIVIL\DRAWINGS\CURRENT\C-1839-02 - DETAILS.DWG

ENGINEER:

ALLEN & MAJOR ASSOCIATES, INC.
civil & structural engineering ♦ land surveying
environmental consulting ♦ landscape architecture
www.allenmajor.com
100 COMMERCE WAY
P.O. BOX 2118
WOBURN MA 01888-0118
TEL: (781) 935-6889
FAX: (781) 935-2896
WOBURN, MA ♦ LAKEVILLE, MA ♦ MANCHESTER, NH

SEAL:

COMMONWEALTH OF MASSACHUSETTS
TIMOTHY J. WILLIAMS
CIVIL
No.43119
REGISTERED PROFESSIONAL ENGINEER
10/23/15

CONSULTANT:

OWNER:

MGM RESORTS INTERNATIONAL
3260 Industrial Road, Las Vegas,NV 89109
702.692.9622 Phone 702.862.1750 Fax

MGM SPRINGFIELD
SPRINGFIELD, MA

PROJECT:
MGM SPRINGFIELD - SITE/CIVIL RECORD

REVISIONS:

NO.	DATE	ISSUE
1	10/23/15	SITE PLAN APPROVAL

THIS DRAWING HAS BEEN PREPARED IN ELECTRONIC FORMAT. CLIENT/CLIENT'S REPRESENTATIVE OR CONSULTANT MAY BE PROVIDED COPIES OF DRAWINGS AND SPECIFICATIONS ON MAGNETIC MEDIA FOR HIS/HER INFORMATION AND USE FOR SPECIFIC APPLICATION TO THIS PROJECT. DUE TO THE POTENTIAL THAT THE MAGNETIC INFORMATION MAY BE MODIFIED UNINTENTIONALLY OR OTHERWISE, ALLEN & MAJOR ASSOCIATES, INC. MAY REMOVE ALL INDICATION OF THE DOCUMENT'S AUTHORSHIP ON THE MAGNETIC MEDIA. PRINTED REPRESENTATIONS OF THE DRAWINGS AND SPECIFICATIONS ISSUED SHALL BE THE ONLY RECORD COPIES OF ALLEN & MAJOR ASSOCIATES, INC.'S WORK PRODUCT.

Copyright 2015 Allen & Major Associates, Inc.
All Rights Reserved

DRAWING TITLE:

DETAILS
SEWER

All dimensions, levels, layouts and field conditions shall be verified at the site by the contractor before proceeding with the work.

MRID Project No.		58012MASS
Consultant Project No.		1839-02D
Date:		08/14/2015
Drawn By KEA	Checked By TJW	Approved By TJW
File Name: C1839-02D		

D-9

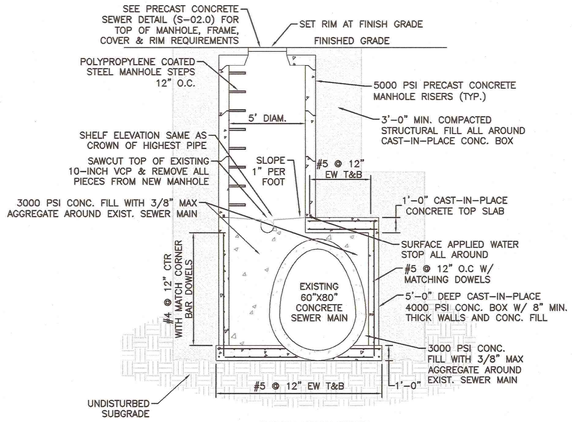

TYPICAL UNION STREET SEWER MANHOLE

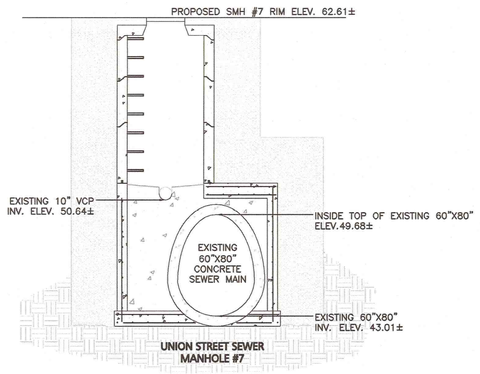

UNION STREET SEWER MANHOLE #7

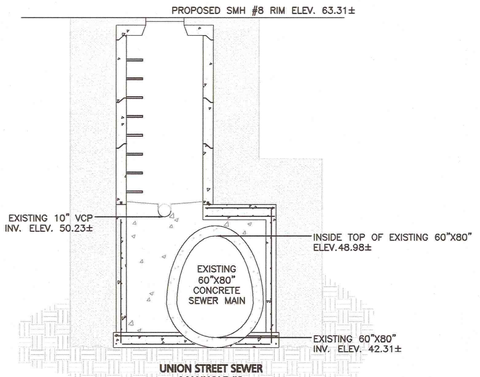

UNION STREET SEWER MANHOLE #8

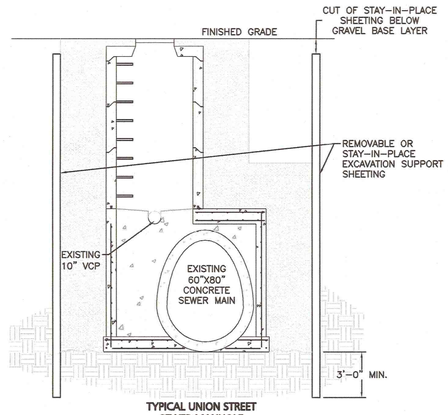

TYPICAL UNION STREET SEWER MANHOLE CONSTRUCTION

NOTES:
1. ALL MATERIALS AND INSTALLATION PROCEDURES SHALL CONFORM TO SWSC GUIDELINES AND POLICIES AND SPECIFICATIONS.
2. ALL SEWER MAIN PIPE SHOULD HAVE A MINIMUM DEPTH OF 4' FROM TOP OF PIPE TO FINISH GRADE.
3. IF 4' OF COVER IS NOT POSSIBLE PIPE SHALL BE INSULATED.
4. REINFORCED CONCRETE MANHOLE SECTIONS CONFORMING TO A.S.T.M.C478.
5. DESIGN PRECAST SECTIONS WITH FRAME AND COVER FOR AASHTO H-20 LOADING.
6. PRE-CAST CONCRETE SHALL BE 5,000 PSI @ 28 DAYS.
7. ALL BRICK SHALL BE HARD NON-POROUS CLAY.
8. ADMIXTURES, AIR & PLASTICIZERS PER ASTM C233-82.
9. REINFORCING PER ASTM A615 FOR WIRE FABRIC.
10. PROVIDE 3" CONCRETE COVER OVER REBAR UNLESS OTHERWISE NOTED OR VERIFIED BY ENGINEER IN FIELD.
11. DESIGN LOADING PER AASHTO HS20-44, ACI 318-83; ASTM C478-82, C890-82, C913-71.
12. REFERENCE SWSC DETAIL S-02.0 PRECAST CONCRETE SEWER MANHOLE.
13. HORIZONTAL LOCATION OF 10-INCH VCP TO 60"X80" SEWER MAIN IS TO BE VERIFIED IN FIELD.
14. A GEOTECHNICAL ENGINEER SHALL BE ENGAGED TO SPECIFY MINI-PILES SYSTEM AND MONITOR INSTALLATION TO ATTAIN DESIRED CAPACITY.
15. CAST-IN-PLACE CONCRETE SHALL HAVE A 28 DAY COMPRESSIVE STRENGTH STRENGTH OF 4,000 PSI AND SHALL HAVE A MAXIMUM WATER / CEMENT RATIO OF 0.42 AND 6.0% ± 1.0% AIR ENTRAINMENT.

UNION STREET SEWER MANHOLES
PROPOSED SMH#7 & SMH#8
1" = 40' — (1)

NOT USED — NOT TO SCALE — (2)

NOT USED — NOT TO SCALE — (3)

NOT USED — NOT TO SCALE — (4)

NOT USED — NOT TO SCALE — (5)

NOT USED — NOT TO SCALE — (6)

N:\PROJECTS\1839-02\CIVIL\DRAWINGS\CURRENT\C-1839-02 - DETAILS.DWG

ENGINEER :

ALLEN & MAJOR ASSOCIATES, INC.
civil & structural engineering • land surveying
100 COMMERCE WAY
WOBURN, MA 01801-1140
TEL (781) 935-6889
FAX (781) 935-2896
WOBURN, MA • LAKELAND, FL • MANCHESTER, NH

SEAL:

COMMONWEALTH OF MASSACHUSETTS
TIMOTHY J. WILLIAMS
CIVIL
No. 43119
REGISTERED PROFESSIONAL ENGINEER

CONSULTANT:

OWNER :

MGM RESORTS INTERNATIONAL
3260 Industrial Road, Las Vegas,NV 89109
702.692.9622 Phone 702.862.1750 Fax

SPRINGFIELD
SPRINGFIELD, MA

PROJECT
MGM SPRINGFIELD - SITE/CIVIL RECORD

REVISIONS :

NO.	DATE	ISSUE
1	10/23/15	SITE PLAN APPROVAL

THIS DRAWING HAS BEEN PREPARED IN ELECTRONIC FORMAT. CLIENT/CLIENT'S REPRESENTATIVE OR CONSULTANT MAY BE PROVIDED COPIES OF DRAWINGS AND SPECIFICATIONS ON MAGNETIC MEDIA FOR HIS/HER INFORMATION AND USE FOR SPECIFIC APPLICATIONS ONLY. DUE TO THE POSSIBILITY THAT THE MAGNETIC INFORMATION MAY BE ALTERED INTENTIONALLY OR OTHERWISE, ALLEN & MAJOR ASSOCIATES, INC MAY REMOVE ALL INDICATION OF THE DOCUMENT'S AUTHORSHIP ON THE MAGNETIC MEDIA. PRINTED REPRESENTATIONS OF THE DRAWINGS AND SPECIFICATIONS SEALED SHALL BE THE ONLY RECORD COPIES OF ALLEN & MAJOR ASSOCIATES, INC'S WORK PRODUCT.

Copyright 2015 Allen & Major Associates, Inc. All Rights Reserved

DRAWING TITLE :

DETAILS
SEWER

All dimensions, levels, layouts and field conditions shall be verified at the site by the contractor before proceeding with the work.

MRID Project No.	58012MASS
Consultant Project No.	1839-02D
Date:	08/14/2015

Drawn By	Checked By	Approved By
KEA	TJW	TJW

File Name: C1839-02D

D-10

NOTES:
1. ALL MATERIALS WILL CONFORM TO SWSC SPECIFICATIONS AND INSTALLATION PROCEDURES SHALL CONFORM TO SWSC GUIDELINES & POLICIES AND POLICIES.
2. ALL WATER MAIN SHOULD HAVE A MINIMUM DEPTH OF 5' FROM TOP OF PIPE TO FINISH GRADE.
3. SEE DETAIL SHEET FOR TRENCH DETAILS.
4. ON 50-FOOT WIDE STREETS WATER MAINS SHALL BE INSTALLED 18-FEET FROM THE NORTH OR EACH STREET LINE, ALL OTHER WIDTHS REQUIRE ENGINEERING & TECHNICAL SERVICES APPROVAL.
5. SWSC DETAIL W-01.0 TAKEN FROM SWSC GUIDELINES AND POLICIES DETAIL DRAWINGS, VERSION 1, DATED APRIL 1, 2008.

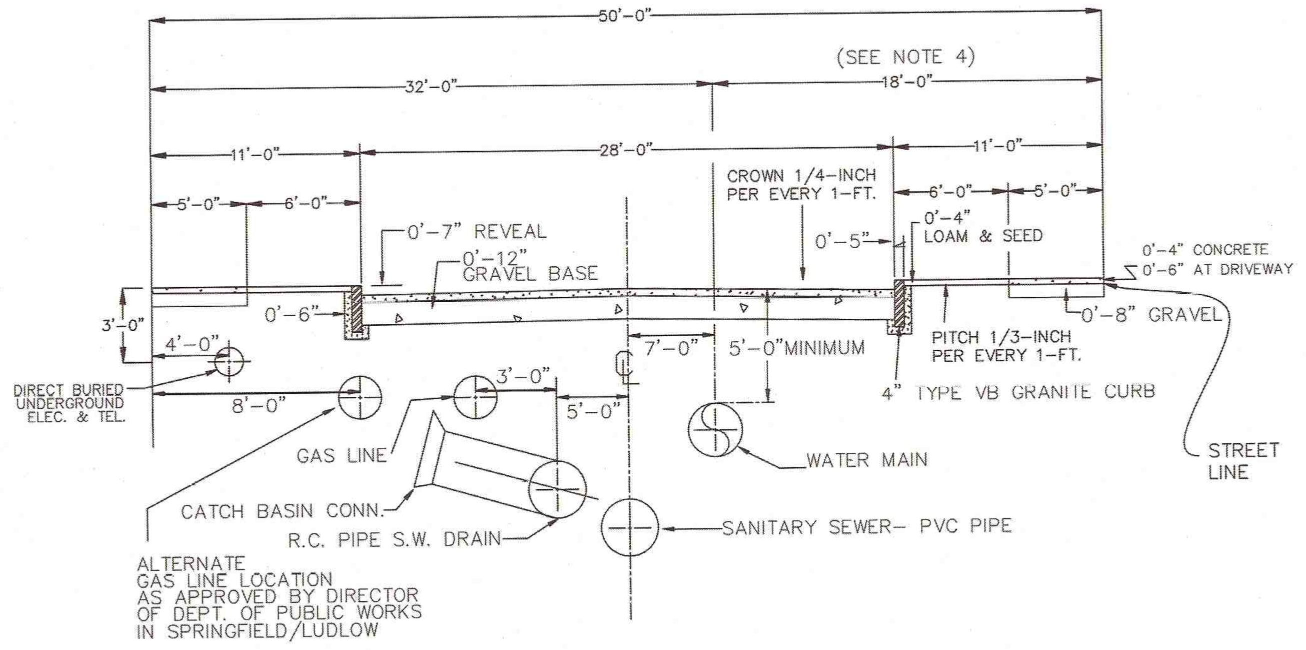

UTILITY SEPARATION (W-01.0)

NOT TO SCALE (1)

NOTES:
1. ALL MATERIALS WILL CONFORM TO SWSC SPECIFICATIONS AND INSTALLATION PROCEDURES SHALL CONFORM TO SWSC GUIDELINES & POLICIES AND POLICIES.
2. ALL WATER MAIN SHOULD HAVE A MINIMUM DEPTH OF 5' FROM TOP OF PIPE TO FINISH GRADE.
3. SEE DETAIL SHEET FOR TRENCH DETAILS.
4. REQUIREMENTS FOR SUBBASE AND BASE MATERIAL TYPES ARE TO BE IN ACCORDANCE WITH LOCAL AUTHORITY HAVING LOCAL JURISDICTION IN PAVED AREAS.
5. REQUIREMENTS FOR GRAVEL, LOAM, AND/OR SEED ARE TO BE IN ACCORDANCE WITH LOCAL AUTHORITY HAVING LOCAL JURISDICTION IN NON-PAVED AREAS.
6. REPLACE WITH THE SAME DEPTH OF ASPHALT OR MINIMUM 5-INCHES.
7. ALL MATERIALS USED TO MEET MASS. STANDARD SPECIFICATIONS FRO HIGHWAYS AND BRIDGES.
8. SAW CUT EDGE OF UTILITY PATCH IS NOT MILLING IS REQUIRED.
9. MILL TO REMOVE TOP COURSE.
10. LEAVE 12-INCH MINIMUM LP BETWEEN EDGE OF TOP AND EDGE OF BINDER COURSE.
11. AFTER TRENCH WORK IS COMPLETED, FILL AROUND PIPE TO BOTTOM WITH GRADED GRAVEL FILL AND COMPACT IN 6-INCH LIFTS.
12. REPLACE LAYERS OF BINDER AND DEEP BASE.
13. TACK AREA OF MILLING 1 GALLON PER 25 SQUARE YARDS.
14. REPLACE TOP COURSE.
15. SEAL EDGES OF UTILITY PATCH WITH HOT POURED RUBBERIZED ASPHALT SEALANT.
16. SWSC DETAIL W-02.5 TAKEN FROM SWSC GUIDELINES AND POLICIES DETAIL DRAWINGS, VERSION 1, DATED APRIL 1, 2008.

TEMPORARY TRENCH BACKFILLING - METHOD FOR ALL STREETS IN SPRINGFIELD ACCEPT SPRINGFIELD ARTERIALS (W-02.5)

NOT TO SCALE (2)

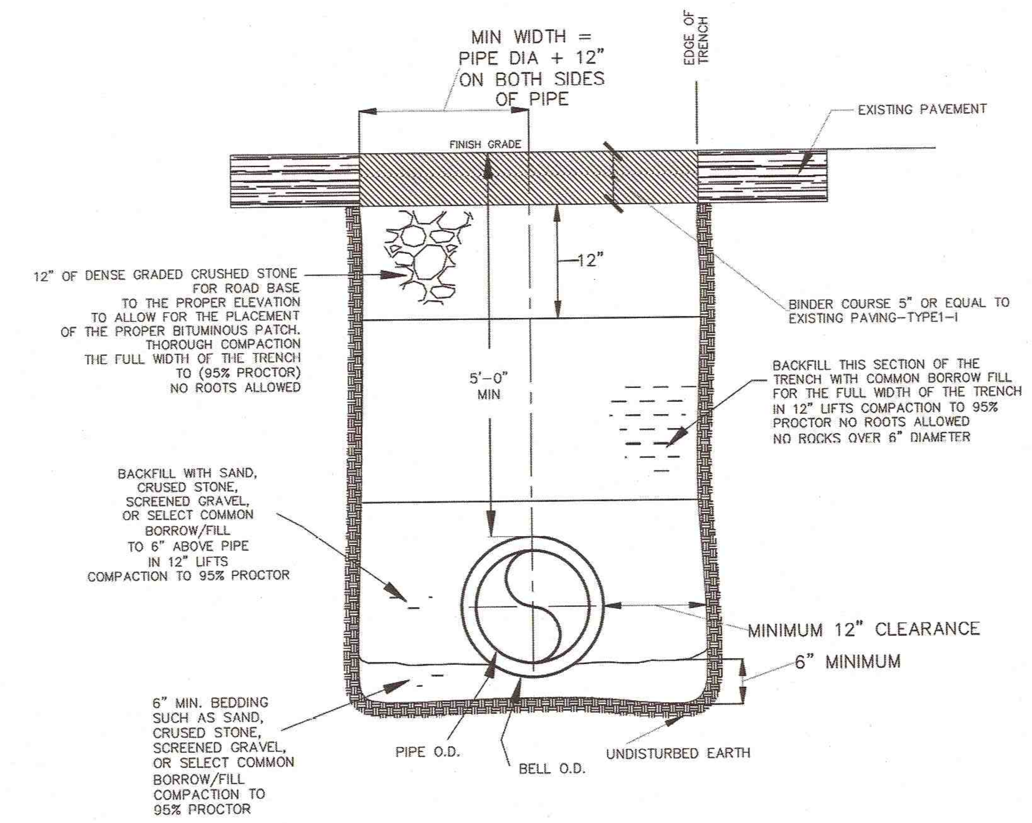

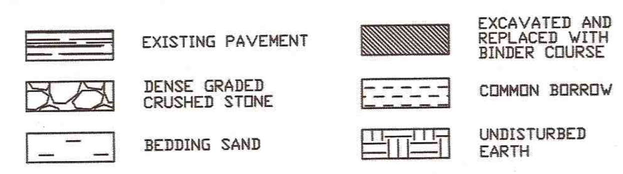

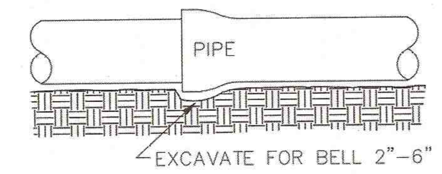

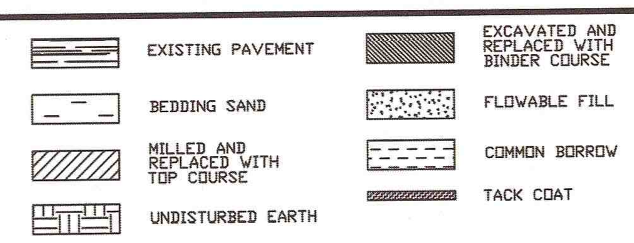

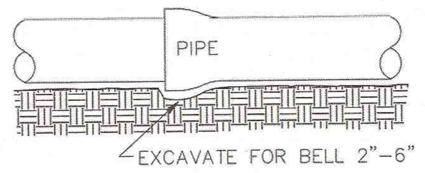

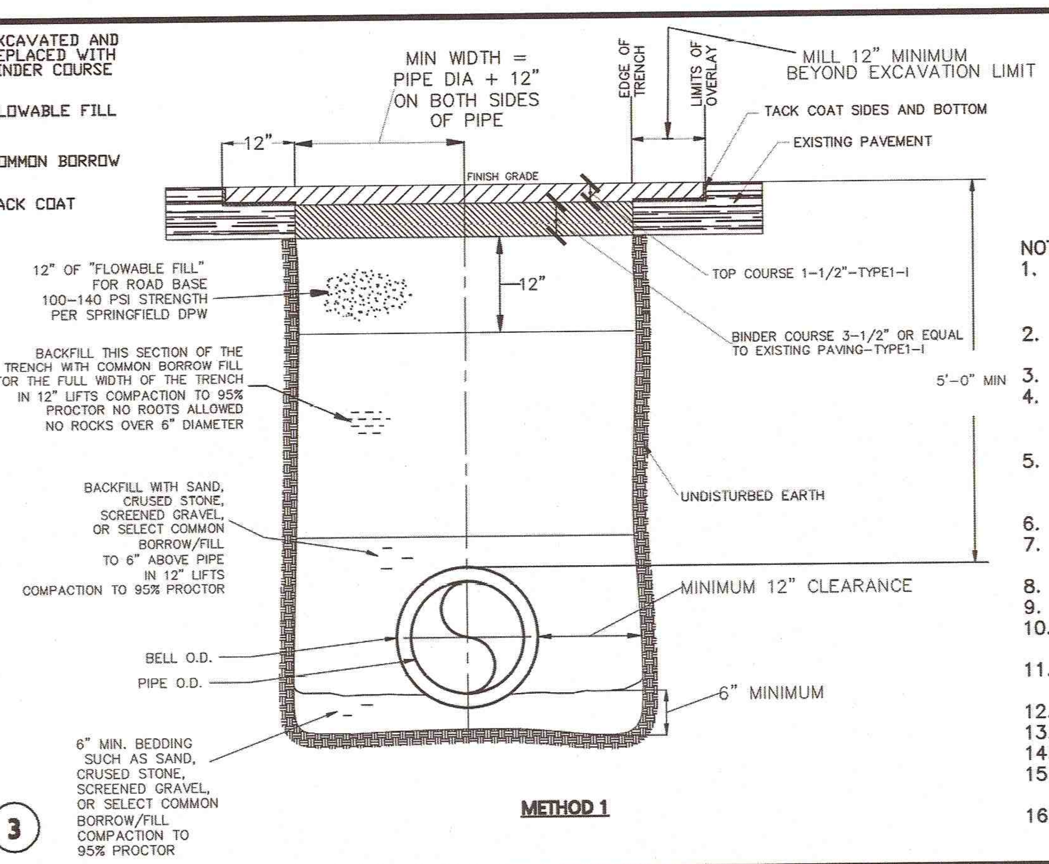

METHOD 1

TRENCH BACKFILLING - FOR ARTERIAL STREETS IN SPRINGFIELD (W-02.3 & W-02.4)

NOT TO SCALE (3)

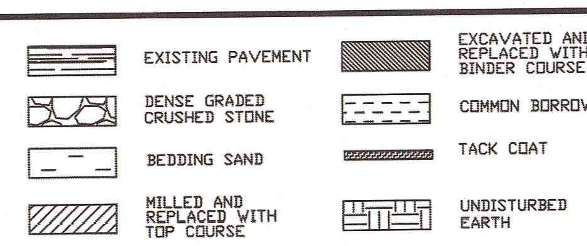

NOTES:
1. ALL MATERIALS WILL CONFORM TO SWSC SPECIFICATIONS AND INSTALLATION PROCEDURES SHALL CONFORM TO SWSC GUIDELINES & POLICIES AND POLICIES.
2. ALL WATER MAIN SHOULD HAVE A MINIMUM DEPTH OF 5' FROM TOP OF PIPE TO FINISH GRADE.
3. SEE DETAIL SHEET FOR TRENCH DETAILS.
4. REQUIREMENTS FOR SUBBASE AND BASE MATERIAL TYPES ARE TO BE IN ACCORDANCE WITH LOCAL AUTHORITY HAVING LOCAL JURISDICTION IN PAVED AREAS.
5. REQUIREMENTS FOR GRAVEL, LOAM, AND/OR SEED ARE TO BE IN ACCORDANCE WITH LOCAL AUTHORITY HAVING LOCAL JURISDICTION IN NON-PAVED AREAS.
6. REPLACE WITH THE SAME DEPTH OF ASPHALT OR MINIMUM 5-INCHES.
7. ALL MATERIALS USED TO MEET MASS. STANDARD SPECIFICATIONS FRO HIGHWAYS AND BRIDGES.
8. SAW CUT EDGE OF UTILITY PATCH IS NOT MILLING IS REQUIRED.
9. MILL TO REMOVE TOP COURSE.
10. LEAVE 12-INCH MINIMUM LP BETWEEN EDGE OF TOP AND EDGE OF BINDER COURSE.
11. AFTER TRENCH WORK IS COMPLETED, FILL AROUND PIPE TO BOTTOM WITH GRADED GRAVEL FILL AND COMPACT IN 6-INCH LIFTS.
12. REPLACE LAYERS OF BINDER AND DEEP BASE.
13. TACK AREA OF MILLING 1 GALLON PER 25 SQUARE YARDS.
14. REPLACE TOP COURSE.
15. SEAL EDGES OF UTILITY PATCH WITH HOT POURED RUBBERIZED ASPHALT SEALANT.
16. SWSC DETAIL W-02.3 & W-02.4 TAKEN FROM SWSC GUIDELINES AND POLICIES DETAIL DRAWINGS, VERSION 1, DATED APRIL 1, 2008.

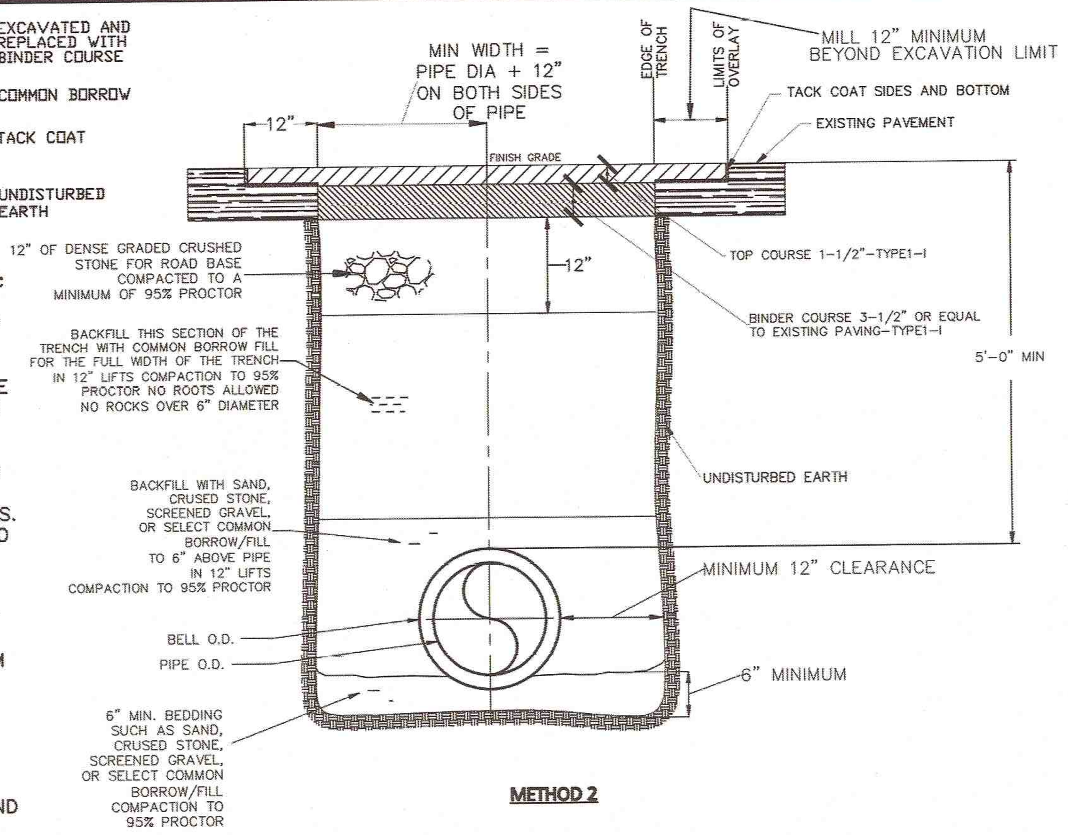

METHOD 2

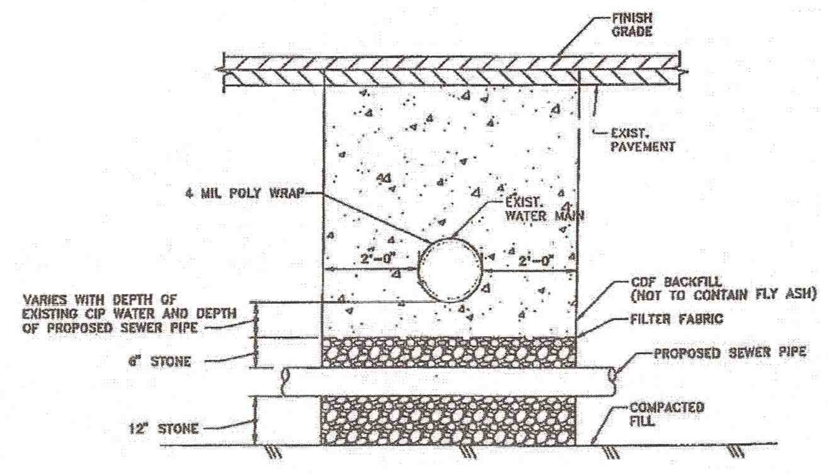

CONTROL DENSITY FILL AND POLY WRAP - WATER MAIN

NOT TO SCALE (4)

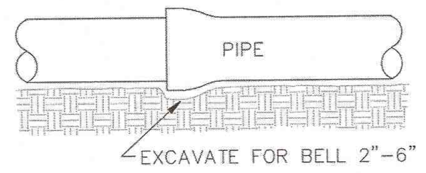

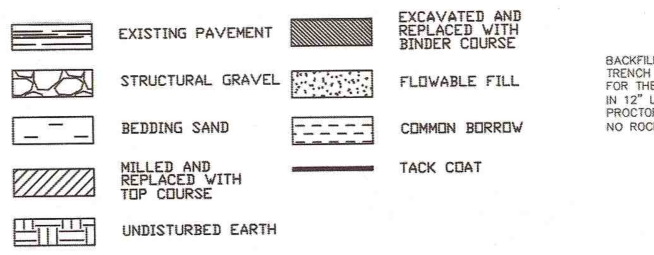

NOTES:
1. ALL MATERIALS WILL CONFORM TO SWSC SPECIFICATIONS AND INSTALLATION PROCEDURES SHALL CONFORM TO SWSC GUIDELINES & POLICIES AND POLICIES.
2. ALL WATER MAIN SHOULD HAVE A MINIMUM DEPTH OF 5' FROM TOP OF PIPE TO FINISH GRADE.
3. SEE DETAIL SHEET FOR TRENCH DETAILS.
4. REQUIREMENTS FOR SUBBASE AND BASE MATERIAL TYPES ARE TO BE IN ACCORDANCE WITH LOCAL AUTHORITY HAVING LOCAL JURISDICTION IN PAVED AREAS.
5. REQUIREMENTS FOR GRAVEL, LOAM, AND/OR SEED ARE TO BE IN ACCORDANCE WITH LOCAL AUTHORITY HAVING LOCAL JURISDICTION IN NON-PAVED AREAS.
6. SWSC DETAIL W-02.0 TAKEN FROM SWSC GUIDELINES AND POLICIES DETAIL DRAWINGS, VERSION 1, DATED APRIL 1, 2008.

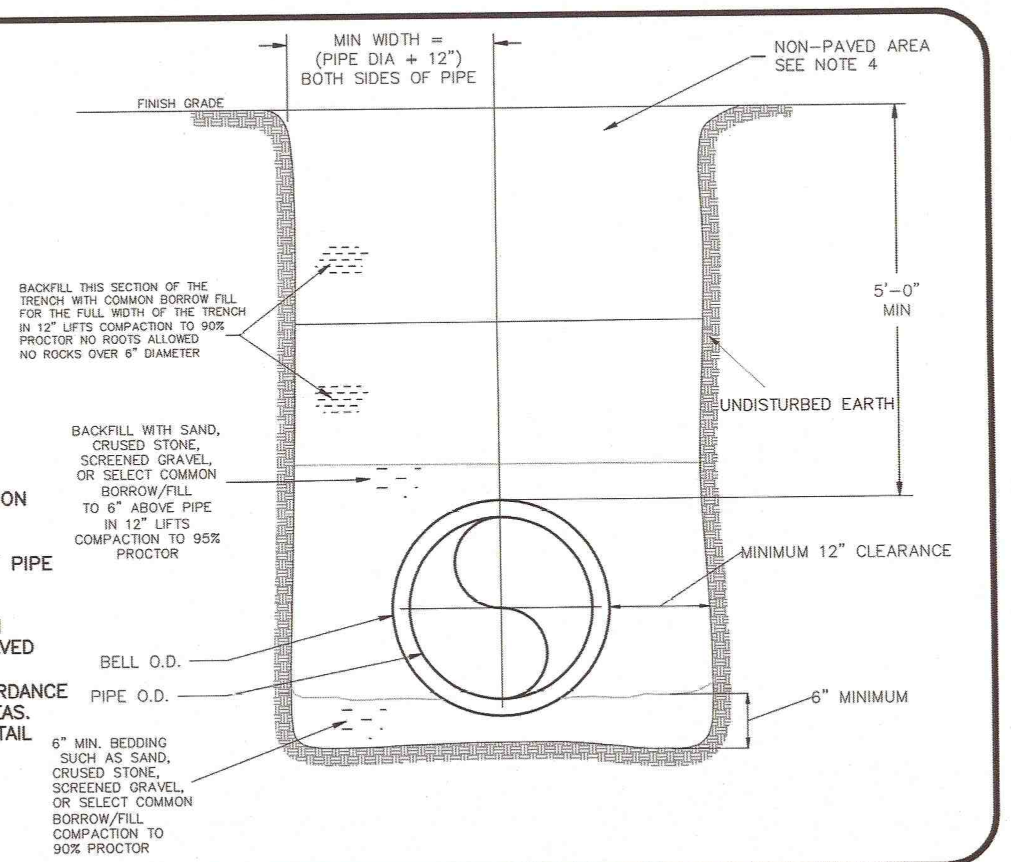

NON-PAVED AREA TRENCH (W-02.0)

NOT TO SCALE (5)

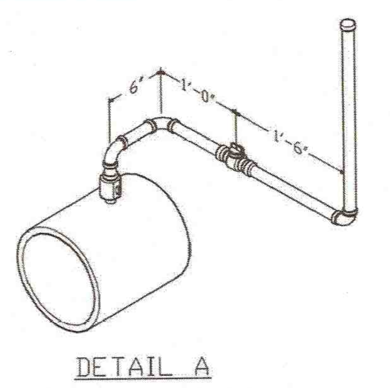

DETAIL A

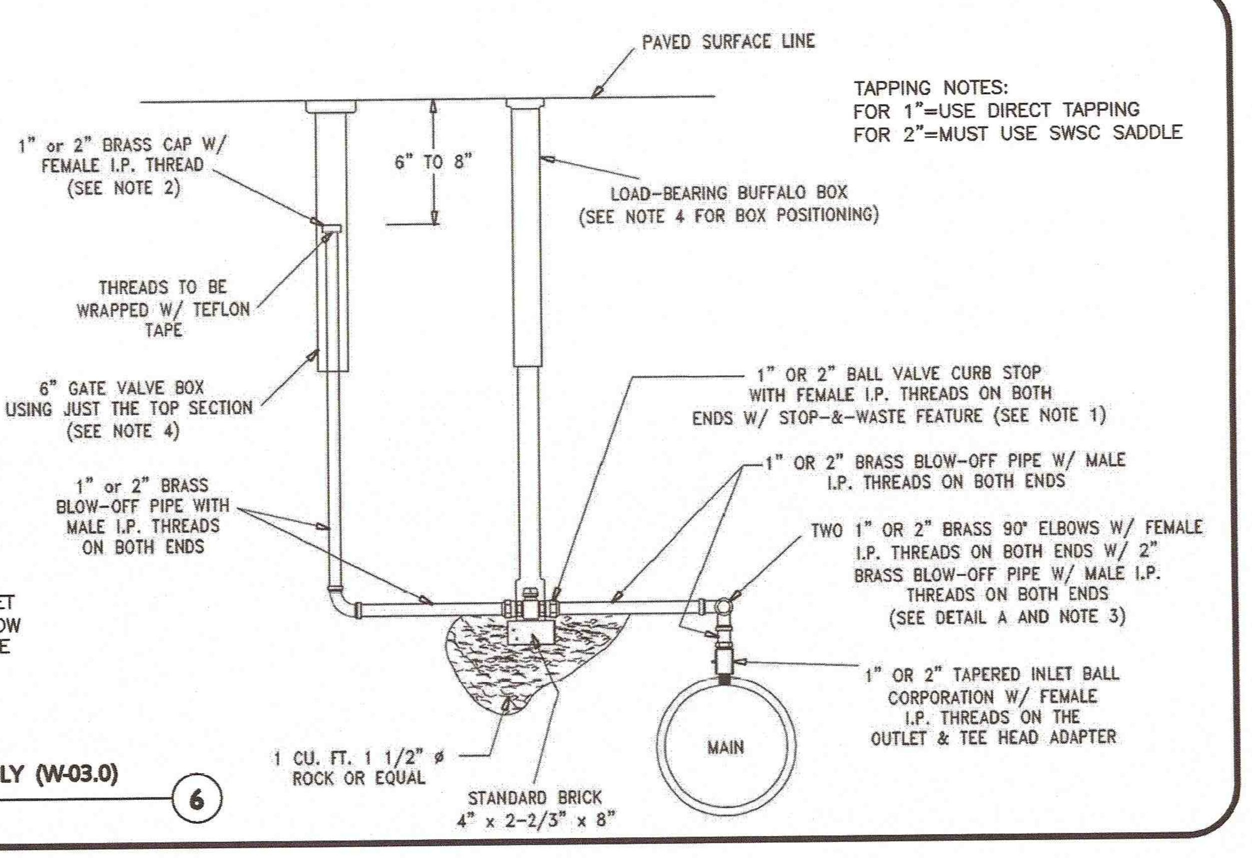

TAPPING NOTES:
FOR 1"=USE DIRECT TAPPING
FOR 2"=MUST USE SWSC SADDLE

NOTES:
1. ALL MATERIALS WILL CONFORM TO SWSC SPECIFICATIONS AND INSTALLATION PROCEDURI SHALL CONFORM TO SWSC GUIDELINES & POLICIES AND POLICIES.
2. INSTALL STOP-&-WASTE W/ DRAIN HOLE ON DOWNSTREAM SIDE (AWAY FROM WATER MAIN).
3. CAP IS TO BE INSTALLED HAND TIGHT.
4. SWING ELBOWS ALLOW FOR PIPE MOVEMENT.
5. VALVE BOX AND BUFFALO BOX ARE TO BE SET TO GRADE IN PAVEMENT AND BURIED 6" BELOW GRADE IN UNPAVED ROADS. RISER PIPE TO BE SET 2" BELOW VALVE BOX TOP IN UNPAVED ROADS.
6. SWSC DETAIL W-03.0 TAKEN FROM SWSC GUIDELINES AND POLICIES DETAIL DRAWINGS, VERSION 1, DATED APRIL 1, 2008.

STANDARD AIR VALVE ASSEMBLY (W-03.0)

NOT TO SCALE (6)

NOT USED

NOT TO SCALE (7)

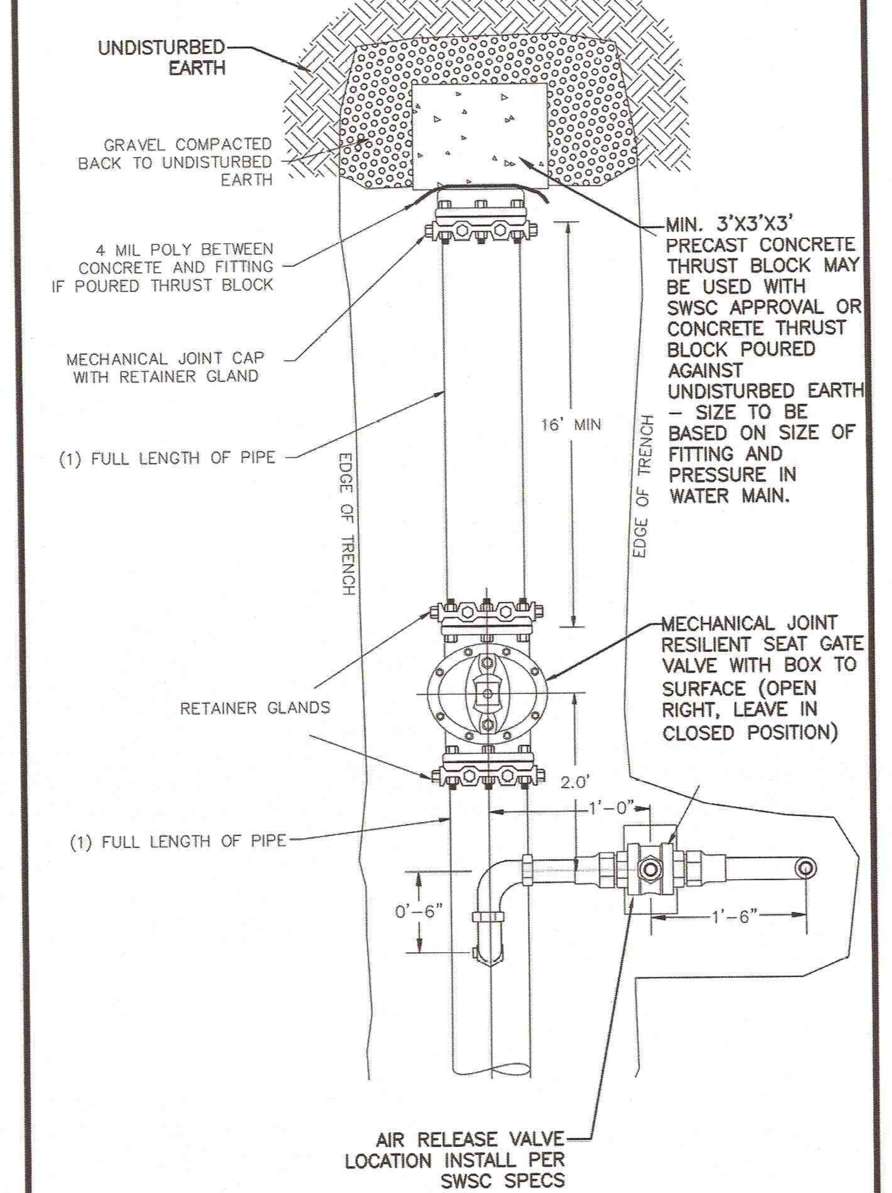

NOTES:
1. ALL MATERIALS WILL CONFORM TO SWSC SPECIFICATIONS AND INSTALLATION PROCEDURES SHALL CONFORM TO SWSC GUIDELINES & POLICIES AND POLICIES.
2. ALL WATER MAIN SHOULD HAVE A MINIMUM DEPTH OF 5' FROM TOP OF PIPE TO FINISH GRADE.
3. SEE DETAIL SHEET FOR TRENCH DETAIL.
4. SWSC DETAIL W-04.0 TAKEN FROM SWSC GUIDELINES AND POLICIES DETAIL DRAWINGS, VERSION 1, DATED APRIL 1, 2008.

END OF MAIN (W-04.0)

NOT TO SCALE (8)

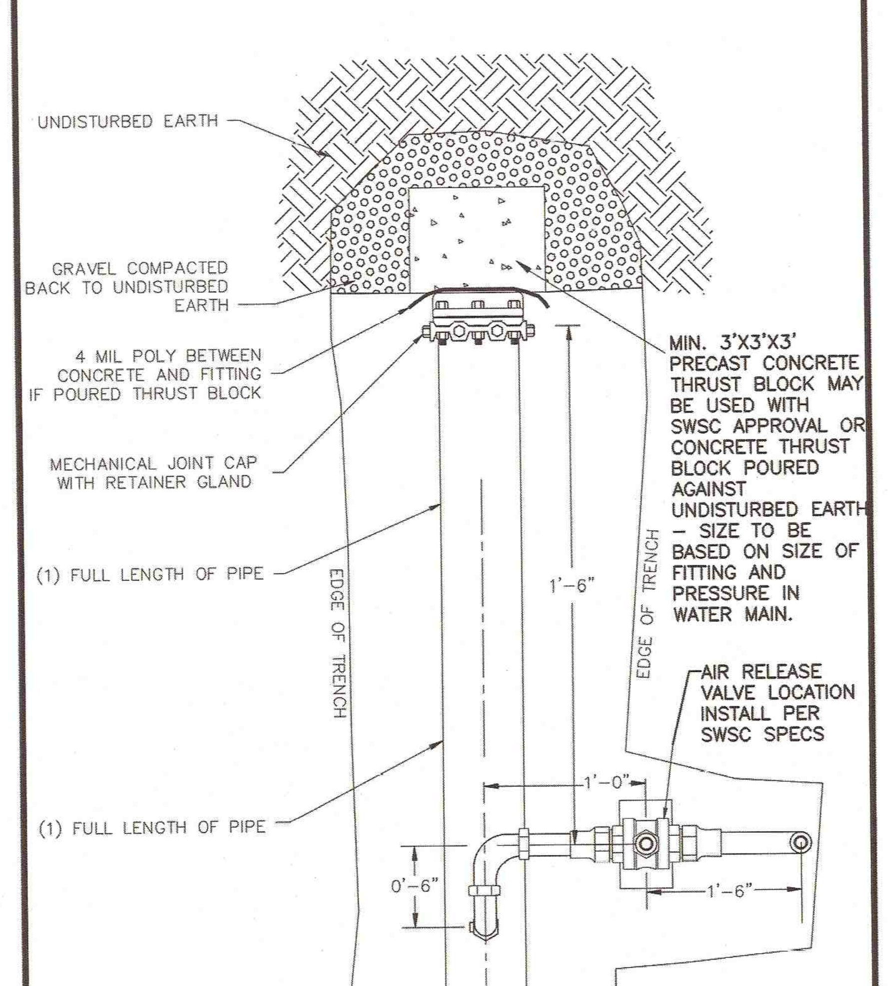

NOTES:
1. SWSC DETAIL W-04.1 TAKEN FROM SWSC GUIDELINES AND POLICIES DETAIL DRAWINGS, VERSION 1, DATED APRIL 1, 2008, REVISED JUNE 18, 2008.
2. ALL MATERIALS WILL CONFORM TO SWSC SPECIFICATIONS AND INSTALLATION PROCEDURES SHALL CONFORM TO SWSC GUIDELINES & POLICIES AND POLICIES.
3. ALL WATER MAIN SHOULD HAVE A MINIMUM DEPTH OF 5' FROM TOP OF PIPE TO FINISH GRADE.
4. SEE DETAIL SHEET FOR TRENCH DETAIL.
5. SWSC DETAIL W-04.1 TAKEN FROM SWSC GUIDELINES AND POLICIES DETAIL DRAWINGS, VERSION 1, DATED APRIL 1, 2008.

END OF MAIN (W-04.1)

NOT TO SCALE (9)

N:\PROJECTS\1839-02\CIVIL\DRAWINGS\CURRENT\C-1839-02 - DETAILS.DWG

ENGINEER:

ALLEN & MAJOR ASSOCIATES, INC.
civil & structural engineering ♦ land surveying
environmental consulting ♦ landscape architecture
www.allenmajor.com
100 COMMERCE WAY
P.O. BOX 2118
WOBURN MA 01888-0118
TEL: (781) 935-6889
FAX: (781) 935-2896
WOBURN, MA ♦ LAKEVILLE, MA ♦ MANCHESTER, NH

SEAL:

COMMONWEALTH OF MASSACHUSETTS
TIMOTHY J. WILLIAMS
CIVIL
No.43119
REGISTERED PROFESSIONAL ENGINEER
10/23/15

CONSULTANT:

OWNER:

MGM RESORTS INTERNATIONAL™
3260 Industrial Road, Las Vegas,NV 89109
702.692.9622 Phone 702.862.1750 Fax

MGM SPRINGFIELD
SPRINGFIELD, MA

PROJECT:
MGM SPRINGFIELD - SITE/CIVIL RECORD

REVISIONS:

NO.	DATE	ISSUE
1	10/23/15	SITE PLAN APPROVAL

THIS DRAWING HAS BEEN PREPARED IN ELECTRONIC FORMAT. CLIENT/CLIENT'S REPRESENTATIVE OR CONSULTANT MAY BE PROVIDED COPIES OF DRAWINGS AND SPECIFICATIONS ON MAGNETIC MEDIA FOR HIS/HER INFORMATION AND USE FOR SPECIFIC APPLICATION TO THIS PROJECT. DUE TO THE POTENTIAL THAT THE MAGNETIC INFORMATION MAY BE MODIFIED UNINTENTIONALLY OR OTHERWISE, ALLEN & MAJOR ASSOCIATES, INC. MAY REMOVE ALL INDICATION OF THE DOCUMENT'S AUTHORSHIP ON THE MAGNETIC MEDIA. PRINTED REPRESENTATIONS OF THE DRAWINGS AND SPECIFICATIONS ISSUED SHALL BE THE ONLY RECORD COPIES OF ALLEN & MAJOR ASSOCIATES, INC.'S WORK PRODUCT.

Copyright 2015 Allen & Major Associates, Inc. All Rights Reserved

DRAWING TITLE:

DETAILS
WATER

All dimensions, levels, layouts and field conditions shall be verified at the site by the contractor before proceeding with the work.

MRID Project No.	58012MASS
Consultant Project No.	1839-02D
Date:	08/14/2015

Drawn By	Checked By	Approved By
KEA	TJW	TJW

File Name: C1839-02D

D-11

NOTES:
1. INFORMATION BASED ON SWSC DETAIL(S) W–04.1, W–06.3, AND W–06.4 TAKEN FROM SWSC GUIDELINES AND POLICIES DETAIL DRAWINGS, VERSION 1, DATED APRIL 1, 2008, REVISED JUNE 18, 2008.
2. ALL MATERIALS WILL CONFORM TO SWSC SPECIFICATIONS AND INSTALLATION PROCEDURES SHALL CONFORM TO SWSC GUIDELINES & POLICIES AND POLICIES.
3. NUMBER OF THREADED RODS IS BASE ON MAXIMUM PRESSURE OF 150 PSI IN MAIN.
4. THREADED RODS ARE TO BE FABRICATED FROM 4140 B–7 ALLOY STEEL.
5. STEEL THREADED RODS SHALL HAVE A YIELD STRESS OF NOT LESS THAN 105,000 PSI.
6. EYE–BOLTS SHALL HAVE A MINIMUM TENSILE STRENGTH OF 50,000 PSI EACH.
7. RESTRAINT FOR 20 INCHES AND LARGER PIPES MUST BE DESIGNED ON A CASE BY CASE BASIS AND APPROVED BY ENGINEER & TECHNICAL SERVICES (ET&S).
8. ALL COMPONENTS TO BE PROTECTIVE COATED WITH PROTECTIVE COATINGS AND TAPE.

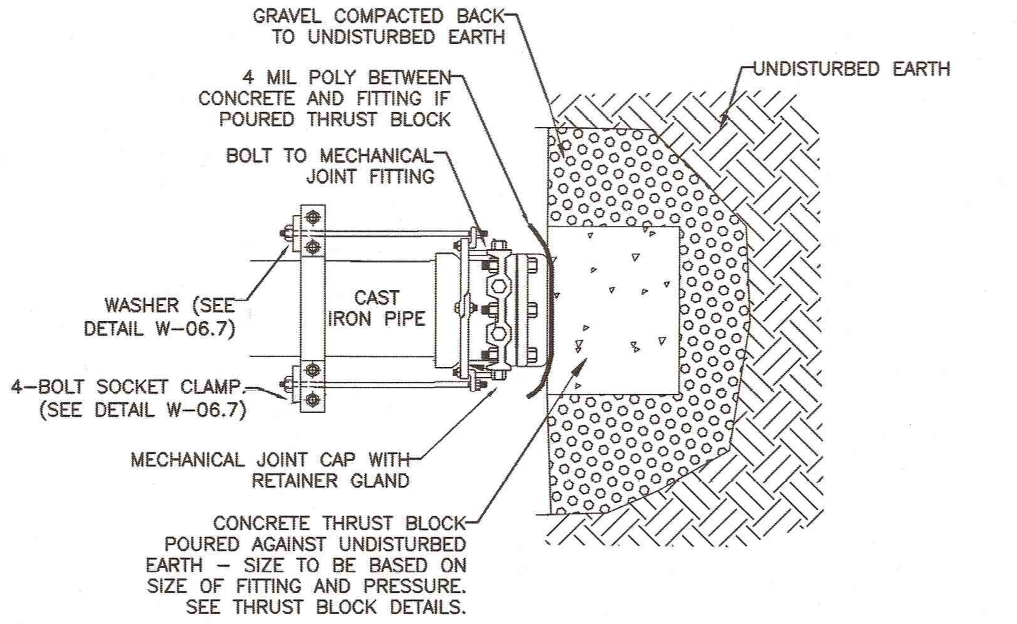

END OF WATER SERVICE WITH BELL FACING VALVE (1)
NOT TO SCALE

NOTES:
1. ALL MATERIALS WILL CONFORM TO SWSC SPECIFICATIONS AND INSTALLATION PROCEDURES SHALL CONFORM TO SWSC GUIDELINES & POLICIES AND POLICIES.
2. ALL WATER MAIN SHOULD HAVE A MINIMUM DEPTH OF 5' FROM TOP OF PIPE TO FINISH GRADE.
3. 4 MIL POLY BETWEEN CONCRETE AND FITTING IF POURED THRUST BLOCK.
4. SEE DETAIL SHEET FOR TRENCH DETAIL.
5. SWSC DETAIL W–14.1 TAKEN FROM SWSC GUIDELINES AND POLICIES DETAIL DRAWINGS, VERSION 1, DATED APRIL 1, 2008.

SPECIAL NOTE:
THRUST BLOCKS ARE NOT AN ACCEPTABLE METHOD OF THRUST RESTRAINT IN MOST SITUATIONS, AND WILL ONLY BE PERMITTED IN SPECIAL CASES.

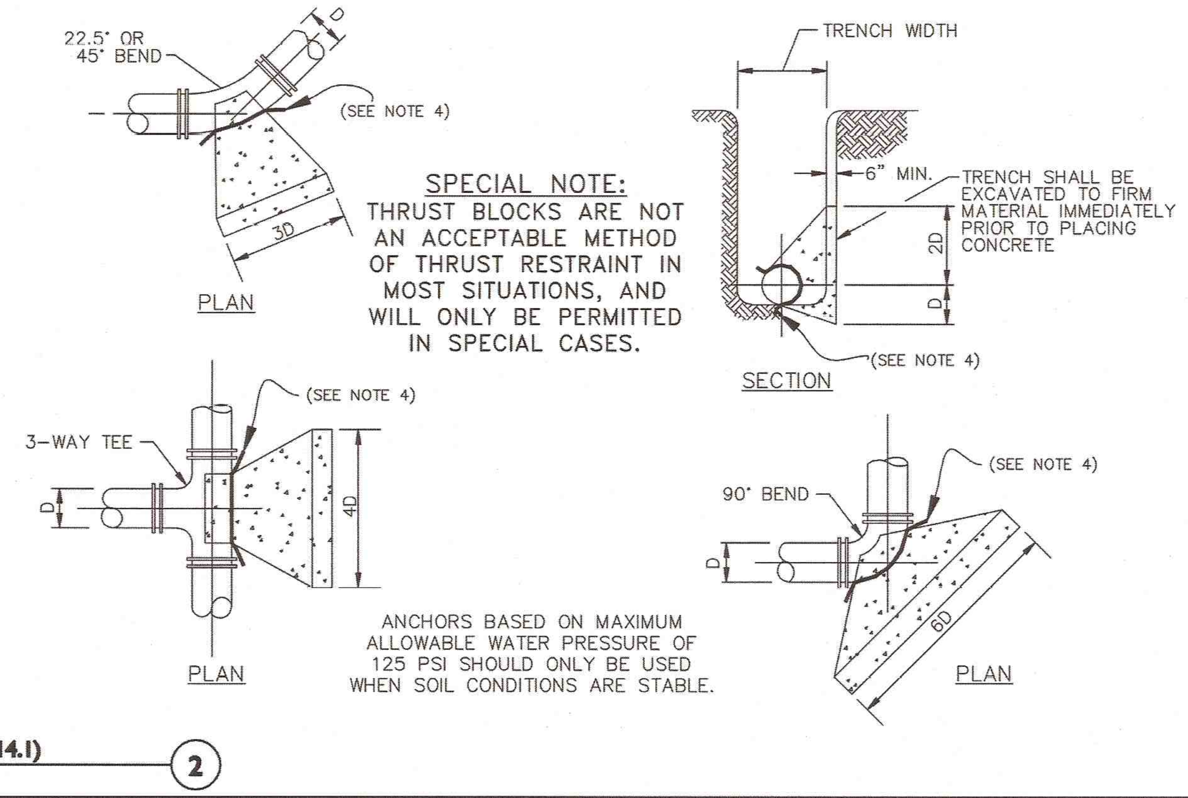

ANCHORS BASED ON MAXIMUM ALLOWABLE WATER PRESSURE OF 125 PSI SHOULD ONLY BE USED WHEN SOIL CONDITIONS ARE STABLE.

THRUST BLOCK (W-14.1) (2)
NOT TO SCALE

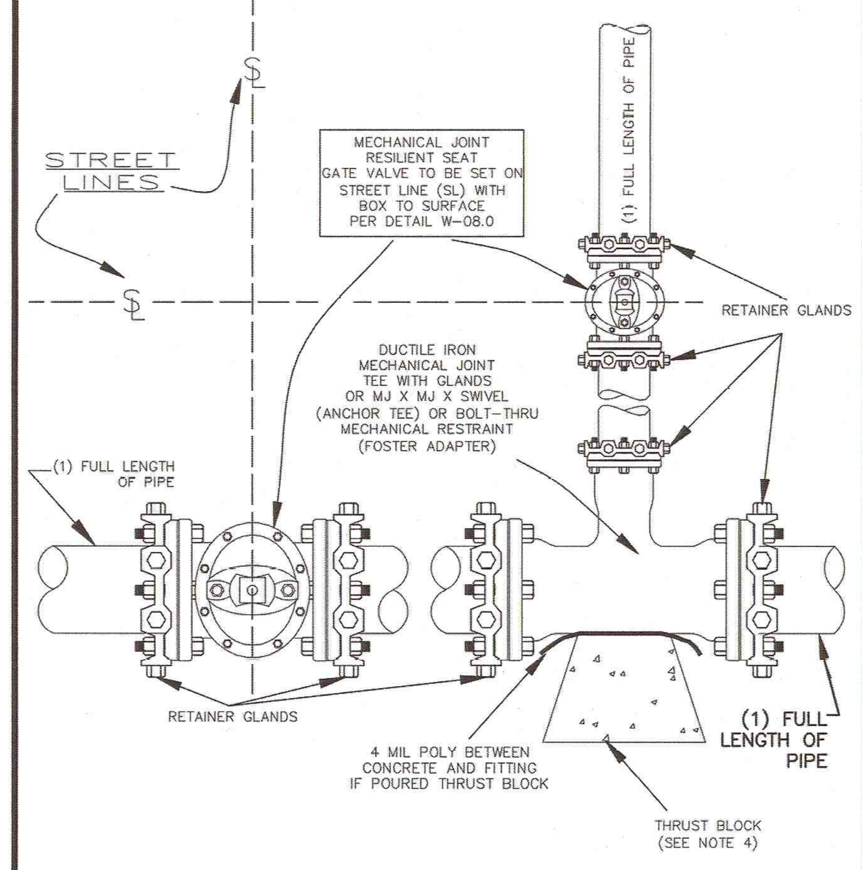

NOTES:
1. ALL MATERIALS WILL CONFORM TO SWSC SPECIFICATIONS AND INSTALLATION PROCEDURES SHALL CONFORM TO SWSC GUIDELINES & POLICIES AND POLICIES.
2. ALL WATER MAIN SHOULD HAVE A MINIMUM DEPTH OF 5' FROM TOP OF PIPE TO FINISH GRADE.
3. SEE DETAIL SHEET FOR TRENCH DETAIL.
4. MIN. 3'X3'X3' PRE CAST CONCRETE THRUST BLOCK MAY BE USED WITH SWSC APPROVAL OR CONCRETE THRUST BLOCK POURED AGAINGST UNDISTURBED EARTH – SIZE TO BE BASED ON SIZE OF FITTING AND PRESSURE IN WATER MAIN.
5. THE MECHANICAL JOINTS OF THE PIPES BETWEEN THE VALVES AND THE FITTINGS SHALL BE RESTRAINED VIA RETAINER GLANDS. IF MORE THAN ONE SECTION IS USED, RETAINER GLAND RESTRAINTS SHALL BE USED AT ALL CONNECTIONS.
6. SWSC DETAIL W–05.0 TAKEN FROM SWSC GUIDELINES AND POLICIES DETAIL DRAWINGS, VERSION 1, DATED APRIL 1, 2008.

STANDARD TEE INSTALLATION (W-05.0) (6)
NOT TO SCALE

NOTES:
1. INFORMATION BASED ON SWSC DETAIL(S) W–04.1, W–06.3, AND W–06.4 TAKEN FROM SWSC GUIDELINES AND POLICIES DETAIL DRAWINGS, VERSION 1, DATED APRIL 1, 2008, REVISED JUNE 18, 2008.
2. ALL MATERIALS WILL CONFORM TO SWSC SPECIFICATIONS AND INSTALLATION PROCEDURES SHALL CONFORM TO SWSC GUIDELINES & POLICIES AND POLICIES.
3. NUMBER OF THREADED RODS IS BASE ON MAXIMUM PRESSURE OF 150 PSI IN MAIN.
4. THREADED RODS ARE TO BE FABRICATED FROM 4140 B–7 ALLOY STEEL.
5. STEEL THREADED RODS SHALL HAVE A YIELD STRESS OF NOT LESS THAN 105,000 PSI.
6. EYE–BOLTS SHALL HAVE A MINIMUM TENSILE STRENGTH OF 50,000 PSI EACH.
7. RESTRAINT FOR 20 INCHES AND LARGER PIPES MUST BE DESIGNED ON A CASE BY CASE BASIS AND APPROVED BY ENGINEER & TECHNICAL SERVICES (ET&S).
8. ALL COMPONENTS TO BE PROTECTIVE COATED WITH PROTECTIVE COATINGS AND TAPE.

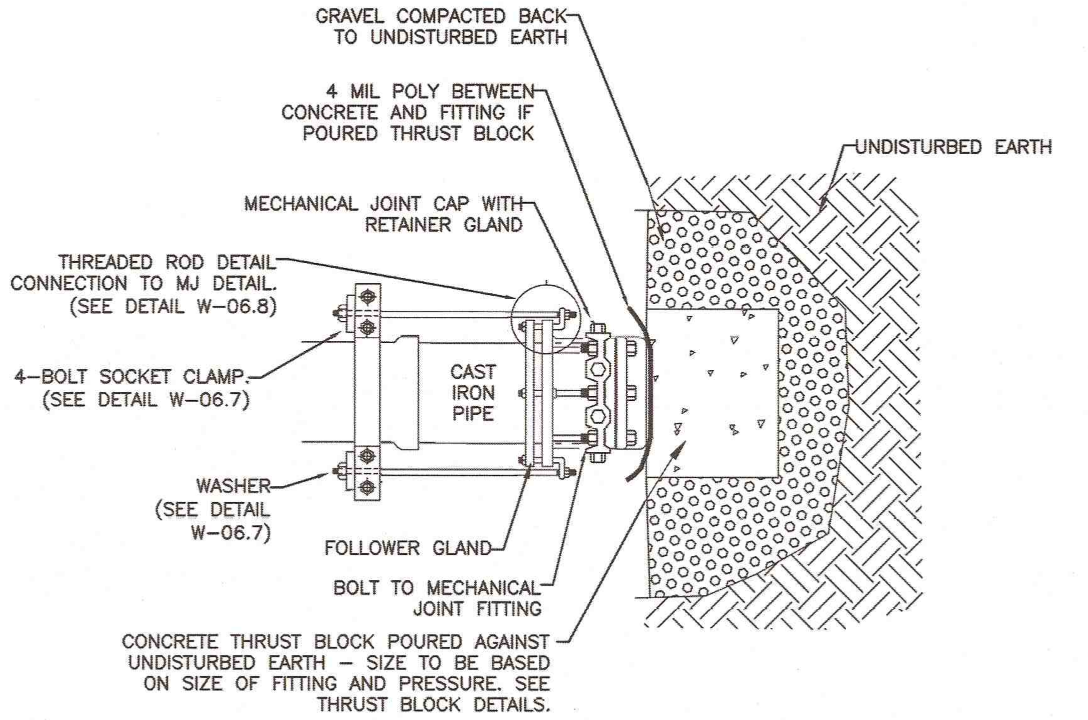

END OF WATER SERVICE WITH BELL FACING AWAY FROM VALVE (3)
NOT TO SCALE

NOT USED (4)
NOT TO SCALE

NOTES:
1. ALL WATER MAIN FITTINGS, BENDS, TEES, PLUGS ETC. SHALL BE RESTRAINED W/ THRUST BLOCKS EXCEPT WHERE NOTED.
2. ALL THRUST BLOCKS & COLLARS SHALL BE INSTALLED SO THAT THEY BEAR AGAINST UNDISTURBED EARTH.
3. SIZE OF CONCRETE THRUST BLOCKS SHALL BE AS NOTED BELOW.
4. MINIMUM COMPRESSIVE STRENGTH OF THRUST BLOCK CONCRETE SHALL BE 3,000 P.S.I.
5. KEEP CONCRETE CLEAR OF MECHANICAL JOINTS.
6. ALL CAST–IN–PLACE THRUST BLOCKS SHALL BE FORMED UP WITH PLYWOOD SO THAT CONCRETE IS NOT CAST AROUND FITTINGS OR MECHANICAL JOINTS.
7. THE BELOW PREDICATED ON A WATER PRESSURE OF 225 PSI AND A SOIL RESISTANCE OF 2000 PSF (TILL). FOR OTHER SOILS THE VALUES IN THE ABOVE TABLE SHALL BE MULTIPLIED BY:

SOFT CLAY	4
SAND	2
SAND & GRAVEL	1.33
SHALE	0.4

MINIMUM THRUST BLOCK BEARING AREAS

PIPE DIAMETER	90° BEND (SQ. FT.)	45° BEND (SQ. FT.)	22.5° BEND (SQ. FT.)	TEES, PLUGS, CAPS & HYDRANTS (SQ.FT.)
6"	5	3	3	4
8"	9	6	3	9
10"	13	7	4	12
12"	20	10	5	16

THRUST BLOCK NOTES (5)
NOT TO SCALE

THE FOLLOWING NOTES PERTAIN TO THE EXECUTION OF WORK ON WATER AND SEWER SERVICES:

1. ALL WORK PERFORMED ON WATER AND SEWER SERVICES MUST BE BY A COMMISSION APPROVED CONTRACTOR WITH A COMMISSION INSPECTOR OBSERVING THE WORK DURING A SCHEDULED APPOINTMENT.
2. COMMISSION CONSTRUCTION CREWS PERFORM ALL WATER SERVICE GATE AND MAIN GATE OPERATION, PERFORM ALL WATER MAIN SHUT DOWNS, PERFORM ALL WORK DIRECTLY ON COMMISSION WATER MAINS INCLUDED BUT NOT LIMITED TO TAPPING THE WATER MAIN, CUTTING THE WATER MAIN, INSTALLATION FITTINGS ALONG THE WATER MAIN.
3. IF WORK BY THE COMMISSION CONSTRUCTION CREW IS 'BASIC', THE COMMISSION CREW PERFORMS THE WORK, BUT THE PROJECT'S CONTRACTOR MUST PROVIDE ALL POLICE DETAILS, STREET OCCUPANCY PERMITS, EXCAVATION TRENCHING AND SHORING, ALL MATERIALS USED IN THE WORK, ALL BACKFILL AND COMPACTION, AND ALL ROADWAY RESTORATION TO DPW STANDARDS.
4. IF WORK BY THE COMMISSION CONSTRUCTION CREW IS 'COMPLETE', THE COMMISSION PROVIDES ALL OF THE ABOVE. EXTRA CHARGES APPLY FOR POLICE DETAILS, PAVEMENT REPAIR, AND OTHER ITEMS AS DESCRIBED IN THE COMMISSION'S RULES AND REGULATIONS. PERFORMANCE OF COMPLETE WORK BY THE COMMISSION CONSTRUCTION CREW IS AT THE DISCRETIONS OF THE COMMISSION, NOT THE PROJECT. IF THE PROPOSED COMPLETE WORK IS OUTSIDE THE SCOPE OF TYPICAL OPERATIONS, IT MAY AT OUR DISCRETION CHARGE THE PROJECT FOR TIME AND MATERIALS,
5. SEWER SERVICE CUT AND CAPS ARE PERFORMED BY A COMMISSION APPROVED CONTRACTOR WITH COMMISSION INSPECTORS OBSERVING THE WORK.
6. WATER SERVICE TEMPORARY DISCONTINUANCES ARE PERFORMED BY A COMMISSION APPROVED CONTRACTOR WITH COMMISSION INSPECTORS OBSERVING THE WORK.
7. THE NUMBER OF COMMISSION INSPECTIONS REQUIRED ARE ESTIMATED AND PAID FOR UP–FRONT BEFORE THE WORK COMMENCES.
8. THERE ARE FEES TO THE COMMISSION ASSOCIATED WITH THE VARIOUS OPTIONS FOR WATER SERVICE WORK AND WORK AT THE WATER MAIN AS DESCRIBED IN THE COMMISSIONS RULES AND REGULATIONS.

EXECUTION OF EXISTING WATER AND SEWER SERVICE(S) NOTES (8)
NOT TO SCALE

THE FOLLOWING NOTES PERTAIN TO ALL WATER AND SEWER SERVICES WHICH ARE NOT INTENDED TO BE REUSED, AND ARE CONNECTED TO A SWSC WATER MAIN OR SEWER MAIN THAT IS TO REMAIN. WATER AND SEWER SERVICES MUST BE DISCONTINUED IN THE FOLLOWING MANNER:

1. SEWER SERVICES ARE CUT AND CAPPED WITHIN THE FIRST 10 FEET OF THE PROPERTY BEHIND STREETLINE. IF A SEWER SERVICE CONNECTS TO A MANHOLE AT THE SEWER MAIN, THE PIPE CONNECTION IN THE MANHOLE MUST BE BRICKED UP ALSO.
2. DRAINAGE SERVICES, IF THEY CONNECT TO A COMMISSION SEWER MAIN AND ARE NOTED TO TEMPORARILY REMAIN, MUST PROVIDE AND MAINTAIN PROTECTION OF THE COMBINED SEWER SYSTEM FOR SOIL EROSION AND CONSTRUCTION DEBRIS. EVENTUALLY CUT AND CAP THE SERVICES ONCE OTHER DRAINAGE PROVISIONS ARE MADE.
3. WATER SERVICES PERMANENT DISCONTINUANCE IF WATER MAINS ARE TO REMAIN.
   - 3.1. 3/4–INCH THRU 2–INCH SERVICES ARE CUT AND CAPPED AT THE WATER MAIN.
   - 3.2. 3–INCH SERVICE AND LARGER REQUIRE FULL DISCONTINUANCE FROM THE WATER MAIN BY THE FOLLOWING GENERAL STEPS.
     - 3.2.1. CONTRACTOR TO PERFORM TEST PIT AT THE SERVICE LOCATION ALONG THE WATER MAIN. DETERMINE ALL FITTINGS AND MATERIALS REQUIRED FOR THE WORK.
     - 3.2.2. CONTRACTOR SHALL COORDINATE WATER MAIN SHUT DOWN WITH COMMISSION OPERATIONS CENTER.
     - 3.2.3. ESTABLISH TEMPORARY BYPASS TO IMPACTED SWSC CUSTOMERS IF NEEDED. SWSC OR CONTRACTOR WILL ESTABLISH TEMPORARY BYPASS DEPENDING ON CONDITIONS AT THE PARTICULAR SITE. IT IS THE SWSC'S OPTION TO REQUIRE THE CONTRACTOR TO ESTABLISH TEMPORARY BYPASS.
     - 3.2.4. SHUT DOWN OF THE WATER MAIN BY SWSC PERSONNEL.
     - 3.2.5. CUT THE EXISTING SERVICE OUT OF THE WATER MAIN.
     - 3.2.6. REPAIR THE WATER MAIN BY THE INSTALLATION OF SEGMENT OF MAIN PIPE, COUPLINGS AND FULL MECHANICAL RESTRAINT DEPENDING ON THE LOCATION OF OTHER STRUCTURES ADJACENT TO THE SERVICE TO BE DISCONTINUED, SYSTEM PRESSURES, TYPE OF MAIN PIPE, AND OTHER FACTORS THAT ARE SITE SPECIFIC FOR EACH LOCATION.
     - 3.2.7. CONTRACTOR SHALL BE FAMILIAR WITH ALL SWSC STANDARD DETAILS THAT MAY PERTAIN TO THE WORK, INCLUDING THOSE NOT SHOWN ON PLANS.
     - 3.2.8. THE CONTRACTOR SHALL PROVIDE ALL TRAFFIC CONTROL, PERMITS, POLICE DETAILS, EXCAVATION, TRENCHING AND SHORING, BACKFILL AND COMPACTION, AND ALL MATERIALS FOR THE WORK.
     - 3.2.9. THE COMMISSION PERFORMS THE WORK ON THE WATER MAIN.
     - 3.2.10. IN SOME LOCATIONS IT MAY BE REQUIRED TO PERFORM THE WORK IN THE EVENING OR WEEKENDS.

DISCONTINUANCE OF EXISTING WATER, SEWER, AND DRAINAGE SERVICE(S) NOTES (9)
NOT TO SCALE

NOTES:
1. ALL MATERIALS WILL CONFORM TO SWSC SPECIFICATIONS AND INSTALLATION PROCEDURES SHALL CONFORM TO SWSC GUIDELINES & POLICIES AND POLICIES.
2. NUMBER OF THREADED RODS IS BASE ON MAXIMUM PRESSURE OF 150 PSI IN MAIN.
3. THREADED RODS ARE TO BE FABRICATED FROM 4140 B–7 ALLOY STEEL.
4. STEEL THREADED RODS SHALL HAVE A YIELD STRESS OF NOT LESS THAN 105,000 PSI.
5. EYE–BOLTS SHALL HAVE A MINIMUM TENSILE STRENGTH OF 50,000 PSI EACH.
6. RESTRAINT FOR 20 INCHES AND LARGER PIPES MUST BE DESIGNED ON A CASE BY CASE BISI AND APPROVED BY ENGINEER & TECHNICAL SERVICES (ET&S).
7. ALL COMPONENTS TO BE PROTECTIVE COATED WITH PROTECTIVE COATINGS AND TAPE.
8. SWSC DETAIL W–06.4 TAKEN FROM SWSC GUIDELINES AND POLICIES DETAIL DRAWINGS, VERSION 1, DATED APRIL 1, 2008.

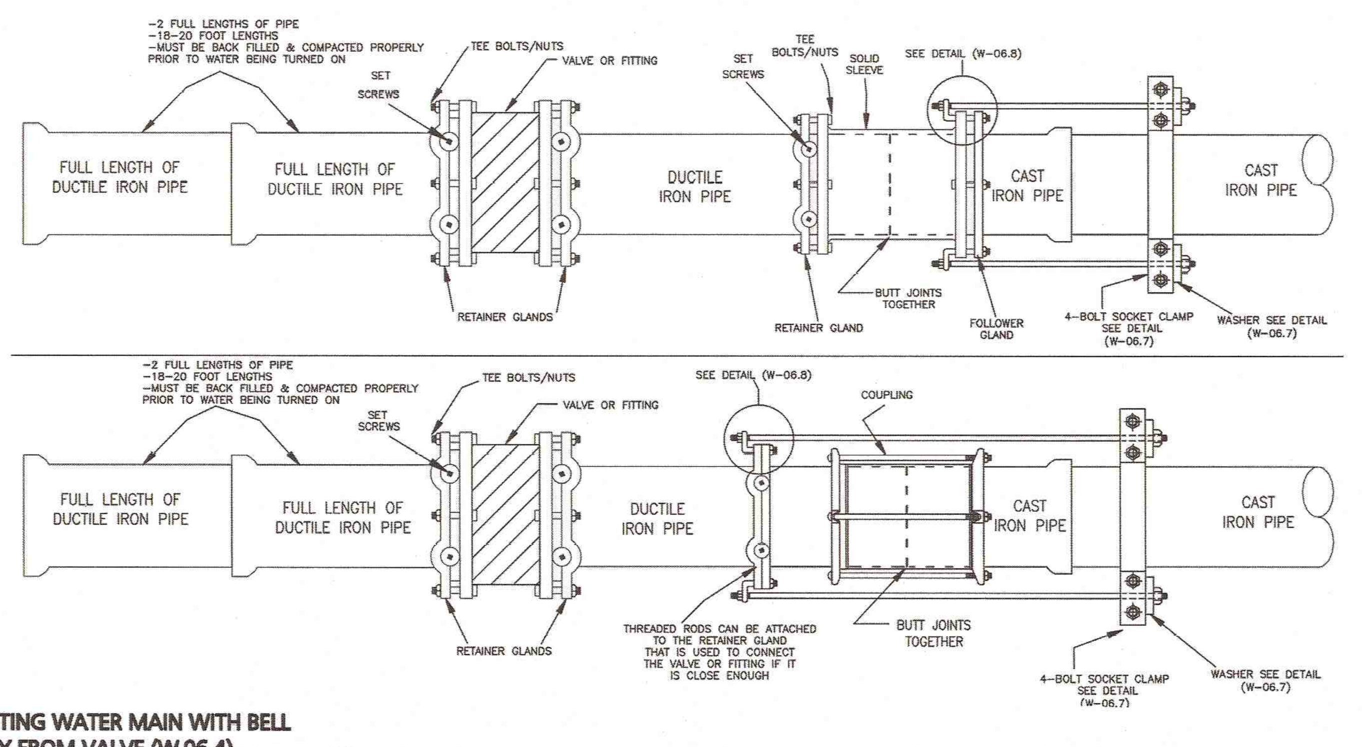

CUTTING INTO EXISTING WATER MAIN WITH BELL FACING AWAY FROM VALVE (W-06.4) (7)
NOT TO SCALE

NOTES:
1. ALL MATERIALS WILL CONFORM TO SWSC SPECIFICATIONS AND INSTALLATION PROCEDURES SHALL CONFORM TO SWSC GUIDELINES & POLICIES AND POLICIES.
2. NUMBER OF THREADED RODS IS BASED ON MAXIMUM PRESSURE OF 150 PSI IN MAIN.
3. THREADED RODS ARE TO BE FABRICATED FROM 4140 B–7 ALLOY STEEL.
4. STEEL THREADED RODS SHALL HAVE A YIELD STRESS OF NOT LESS THAN 105,000 PSI.
5. EYE–BOLTS SHALL HAVE A MINIMUM TENSILE STRENGTH OF 50,000 PSI EACH.
6. RESTRAIN FOR 20 INCHES AND LARGER PIPES MUST BE DESIGNED ON A CASE–BY–CASE BASIS AND APPROVED BY ENGINEERING & TECHNICAL SERVICES (ET&S).
7. ALL COMPONENT TO BE PROTECTIVE COATED WITH PROTECTIVE COATINGS AND TAPE.
8. SWSC DETAIL W–06.3 TAKEN FROM SWSC GUIDELINES AND POLICIES DETAIL DRAWINGS, VERSION 1, DATED APRIL 1, 2008.

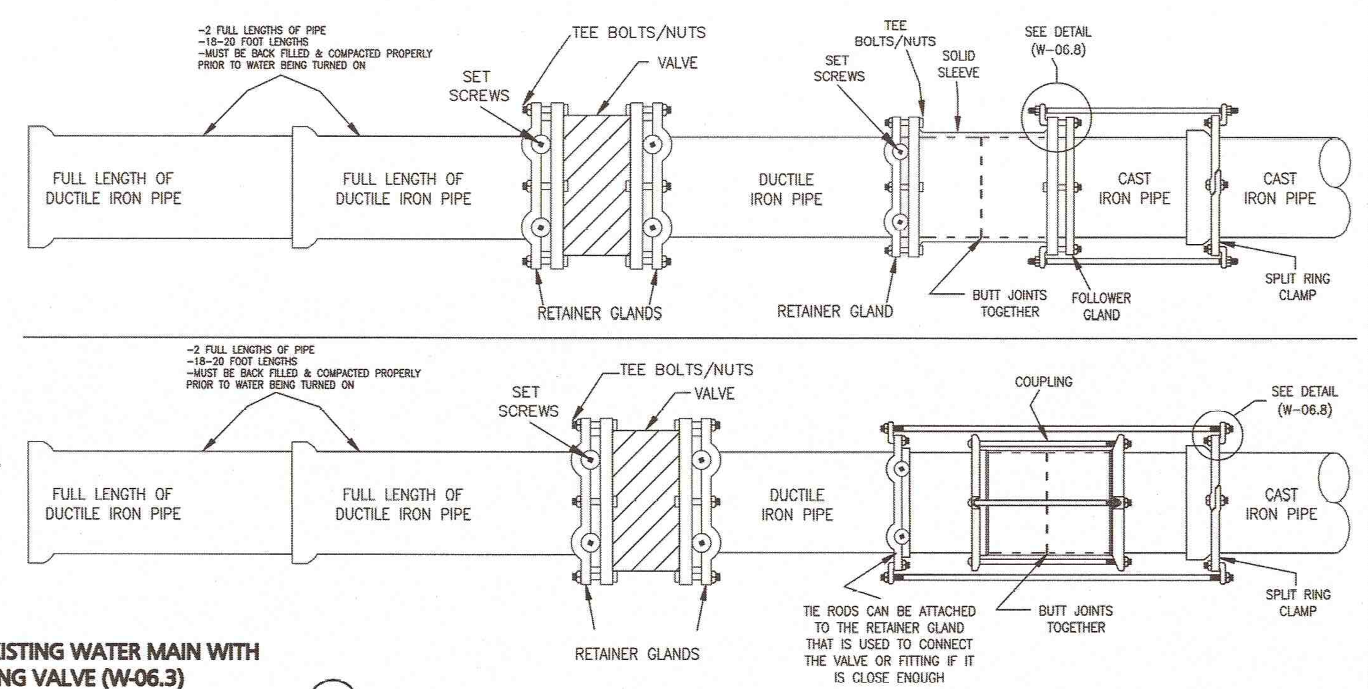

CUTTING INTO EXISTING WATER MAIN WITH BELL FACING VALVE (W-06.3) (10)
NOT TO SCALE

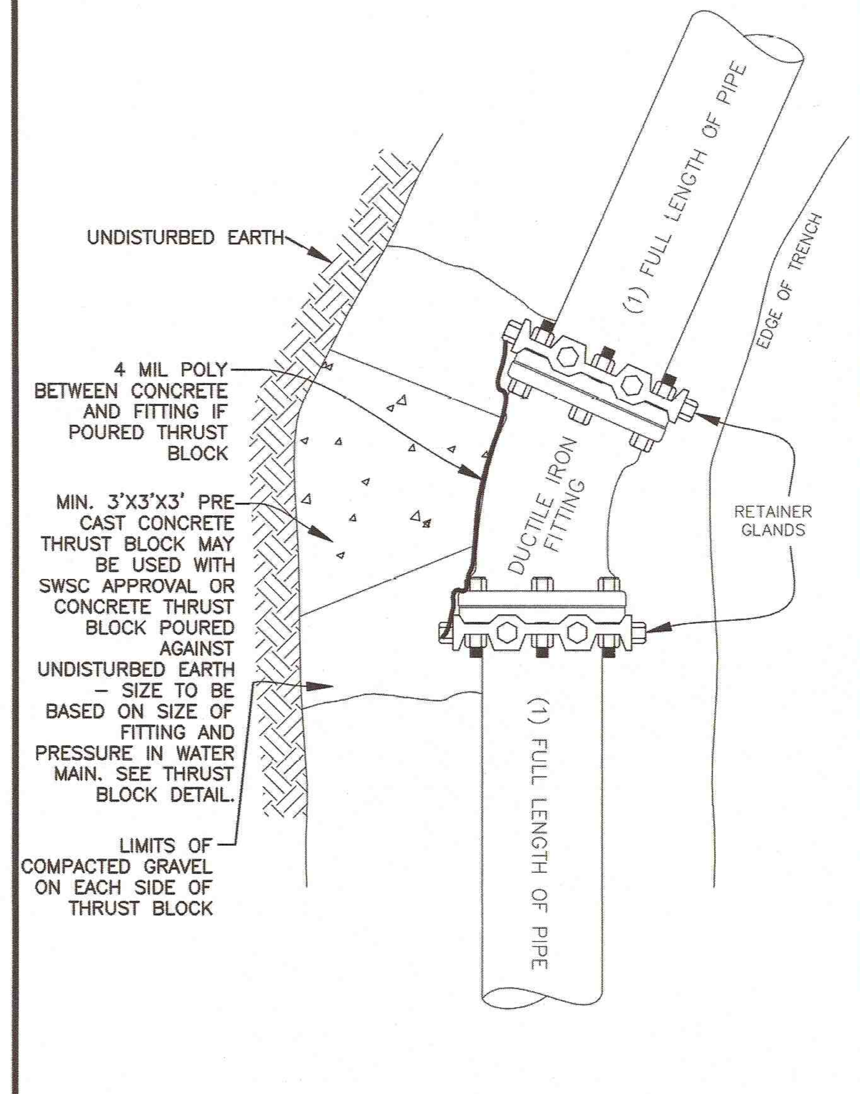

NOTES:
1. ALL MATERIALS WILL CONFORM TO SWSC SPECIFICATIONS AND INSTALLATION PROCEDURES SHALL CONFORM TO SWSC GUIDELINES & POLICIES AND POLICIES.
2. ALL WATER MAIN SHOULD HAVE A MINIMUM DEPTH OF 5–FEET FROM TOP OF PIPE TO FINISH GRADE.
3. SEE TRENCH DETAILS.
4. SWSC DETAIL W–14.0 TAKEN FROM SWSC GUIDELINES AND POLICIES DETAIL DRAWINGS, VERSION 1, DATED APRIL 1, 2008.

THRUST BLOCK BEHIND FITTINGS (W-14.0) (11)
NOT TO SCALE

N:\PROJECTS\1839–02\CIVIL\DRAWINGS\CURRENT\C–1839–02 – DETAILS.DWG

ENGINEER:
ALLEN & MAJOR ASSOCIATES, INC.
civil & structural engineering ♦ land surveying
environmental consulting ♦ landscape architecture
www.allenmajor.com
100 COMMERCE WAY
P.O. BOX 2118
WOBURN MA 01888-0118
TEL: (781) 935-6889
FAX: (781) 935-2896
WOBURN, MA ♦ LAKEVILLE, MA ♦ MANCHESTER, NH

SEAL:
COMMONWEALTH OF MASSACHUSETTS
TIMOTHY J. WILLIAMS
CIVIL
No.43119
REGISTERED PROFESSIONAL ENGINEER
10/23/15

CONSULTANT:

OWNER:
MGM RESORTS INTERNATIONAL
3260 Industrial Road, Las Vegas,NV 89109
702.692.9622 Phone 702.862.1750 Fax

MGM SPRINGFIELD
SPRINGFIELD, MA

PROJECT:
MGM SPRINGFIELD - SITE/CIVIL RECORD

REVISIONS:

NO.	DATE	ISSUE
1	10/23/15	SITE PLAN APPROVAL

THIS DRAWING HAS BEEN PREPARED IN ELECTRONIC FORMAT. CLIENT/CLIENT'S REPRESENTATIVE OR CONSULTANT MAY BE PROVIDED COPIES OF DRAWINGS AND SPECIFICATIONS ON MAGNETIC MEDIA FOR HIS/HER INFORMATION AND USE FOR SPECIFIC APPLICATION TO THIS PROJECT. DUE TO THE POTENTIAL THAT THE MAGNETIC INFORMATION MAY BE MODIFIED UNINTENTIONALLY OR OTHERWISE, ALLEN & MAJOR ASSOCIATES, INC. MAY REMOVE ALL INDICATION OF THE DOCUMENT'S AUTHORSHIP ON THE MAGNETIC MEDIA. PRINTED REPRESENTATIONS OF THE DRAWINGS AND SPECIFICATIONS ISSUED SHALL BE THE ONLY RECORD COPIES OF ALLEN & MAJOR ASSOCIATES, INC.'S WORK PRODUCT.

Copyright 2015 Allen & Major Associates, Inc.
All Rights Reserved

DRAWING TITLE:
DETAILS
WATER

All dimensions, levels, layouts and field conditions shall be verified at the site by the contractor before proceeding with the work.

MRID Project No.	58012MASS
Consultant Project No.	1839-02D
Date:	08/14/2015
Drawn By: KEA	Checked By: TJW
Approved By: TJW	
File Name:	C1839-02D

D-12

THREADED ROD DETAIL CONNECTION TO MJ DETAIL (W-06.8)

NOTES:
1. SWSC DETAIL W-06.8 TAKEN FROM SWSC GUIDELINES AND POLICIES DETAIL DRAWINGS, VERSION 1, DATED APRIL 1, 2008, REVISED JUNE 18, 2008.
2. ALL MATERIALS WILL CONFORM TO SWSC SPECIFICATIONS AND INSTALLATION PROCEDURES SHALL CONFORM TO SWSC GUIDELINES & POLICIES AND POLICIES.
3. NUMBER OF THREADED RODS IS BASE ON MAXIMUM PRESSURE OF 150 PSI IN MAIN.
4. THREADED RODS ARE TO BE FABRICATED FROM 4140 B-7 ALLOY STEEL.
5. STEEL THREADED RODS SHALL HAVE A YIELD STRESS OF NOT LESS THAN 105,000 PSI.
6. EYE-BOLTS SHALL HAVE A MINIMUM TENSILE STRENGTH OF 50,000 PSI EACH.
7. RESTRAINT FOR 20 INCHES AND LARGER PIPES MUST BE DESIGNED ON A CASE BY CASE BISI AND APPROVED BY ENGINEER & TECHNICAL SERVICES (ET&S).
8. ALL COMPONENTS TO BE PROTECTIVE COATED WITH PROTECTIVE COATINGS AND TAPE.

BENT EYE BOLT CONNECTION TO MECHANICAL JOINTS

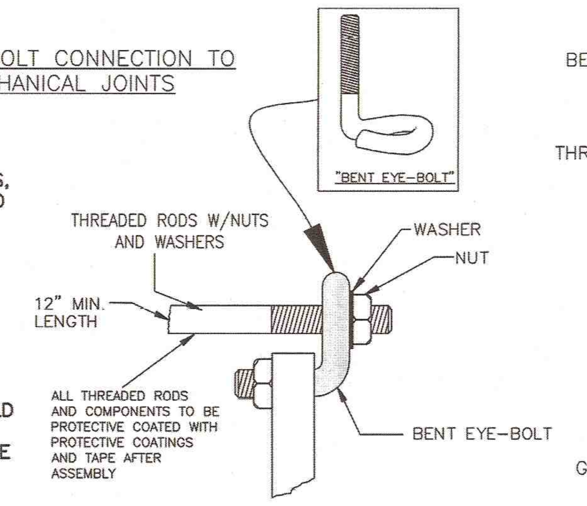

THRUST RESTRAINT – THREADED ROD

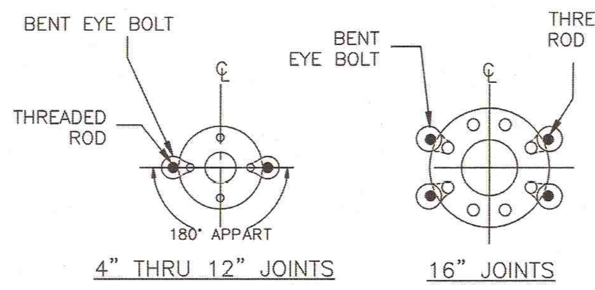

PIPE SIZE	No. THREADED RODS*
4" THRU 10"	2 – 3/4"ø
12"	2 – 1"ø
16"	4 – 1"ø
GREATER THAN 16"	APPROVAL BY ET&S

*STANDARD LENGTHS ARE 3', 6' & 12'
COUPLINGS MAY BE USED FOR LONGER LENGTHS.

*SEE SOCKET CLAMP DETAIL FOR HARDWARE, MATERIAL, MANUFACTURES, AND BOLT TIGHTENING REQUIREMENTS

THREADED ROD DETAIL
CONNECTION TO MJ DETAIL (W-06.8)
NOT TO SCALE
1

STANDARD FIRE HYDRANT ASSEMBLY (W-07.0)

NOTES:
1. ALL MATERIALS WILL CONFORM TO SWSC SPECIFICATIONS AND INSTALLATION PROCEDURES SHALL CONFORM TO SWSC GUIDELINES & POLICIES AND POLICIES.
2. ALL WATER MAIN SHOULD HAVE A MINIMUM DEPTH OF 5' FROM TOP OF PIPE TO FINISH GRADE.
3. SEE DETAIL SHEET FOR TRENCH DETAIL.
4. ALL FIRE HYDRANTS SHALL BE INSTALLED PLUMB & LOCATED ACCORDING TO PROJECT PLANS.
5. NO TAPS SHALL BE ALLOWED BETWEEN THE HYDRANT & THE VALVE.
6. THE MECHANICAL JOINTS OF THE FIRE HYDRANT ASSEMBLY SHALL BE RESTRAINED VIA RETAINER GLAND. IF MORE THAN ONE SECTION IS USED, RETAINED GLAND RESTRAINTS SHALL BE USED AT ALL CONNECTIONS.
7. SWSC DETAIL W-07.0 TAKEN FROM SWSC GUIDELINES AND POLICIES DETAIL DRAWINGS, VERSION 1, DATED APRIL 1, 2008.

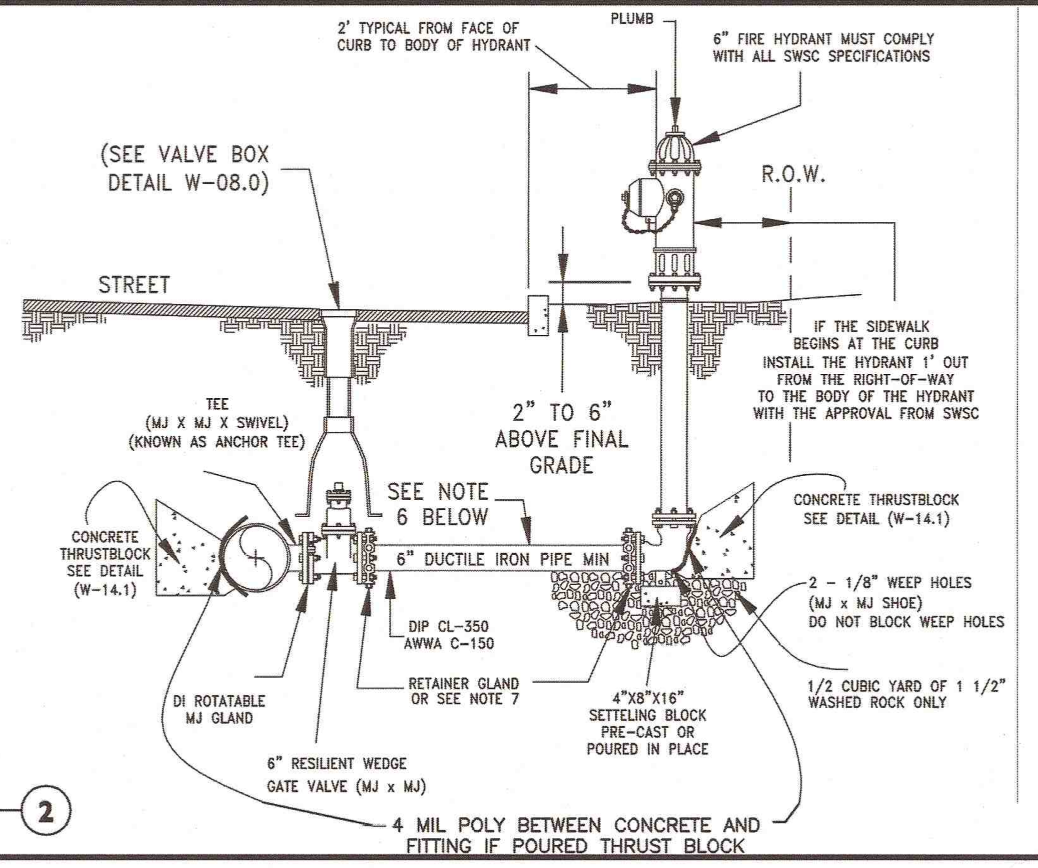

STANDARD FIRE HYDRANT ASSEMBLY (W-07.0)
NOT TO SCALE
2

VALVE BOX (W-08.0)

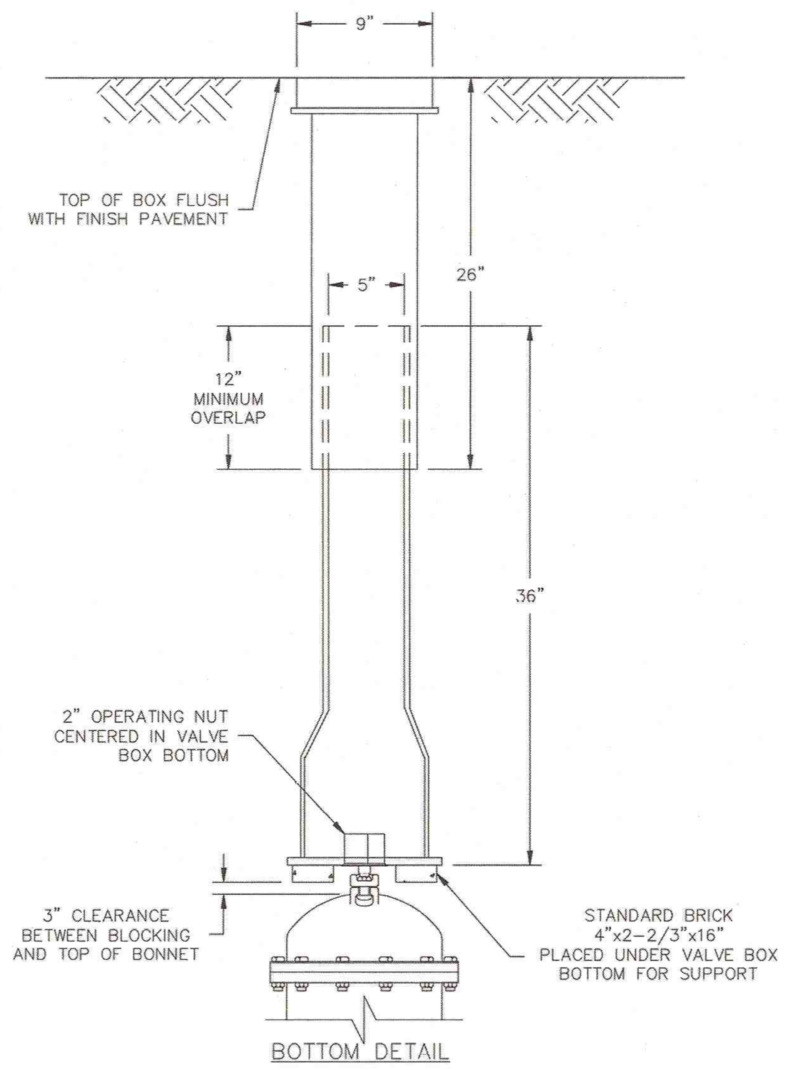

NOTES:
1. ALL MATERIALS WILL CONFORM TO SWSC SPECIFICATIONS AND INSTALLATION PROCEDURES SHALL CONFORM TO SWSC GUIDELINES & POLICIES AND POLICIES.
2. ALL WATER MAIN SHOULD HAVE A MINIMUM DEPTH OF 5-FEET FROM TOP OF PIPE TO FINISH GRADE.
3. SEE TRENCH DETAILS.
4. SWSC DETAIL W-08.0 TAKEN FROM SWSC GUIDELINES AND POLICIES DETAIL DRAWINGS, VERSION 1, DATED APRIL 1, 2008.

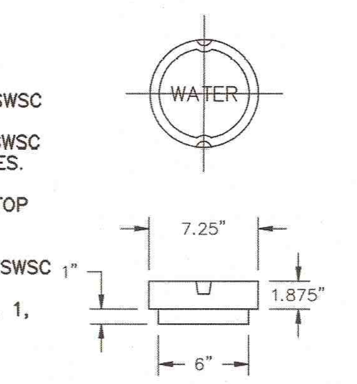

DROP STYLE COVER

NOTE: COVER MUST BE MARKED "WATER"

VALVE BOX (W-08.0)
NOT TO SCALE
5

NEW WATER SERVICE (W-11.0)

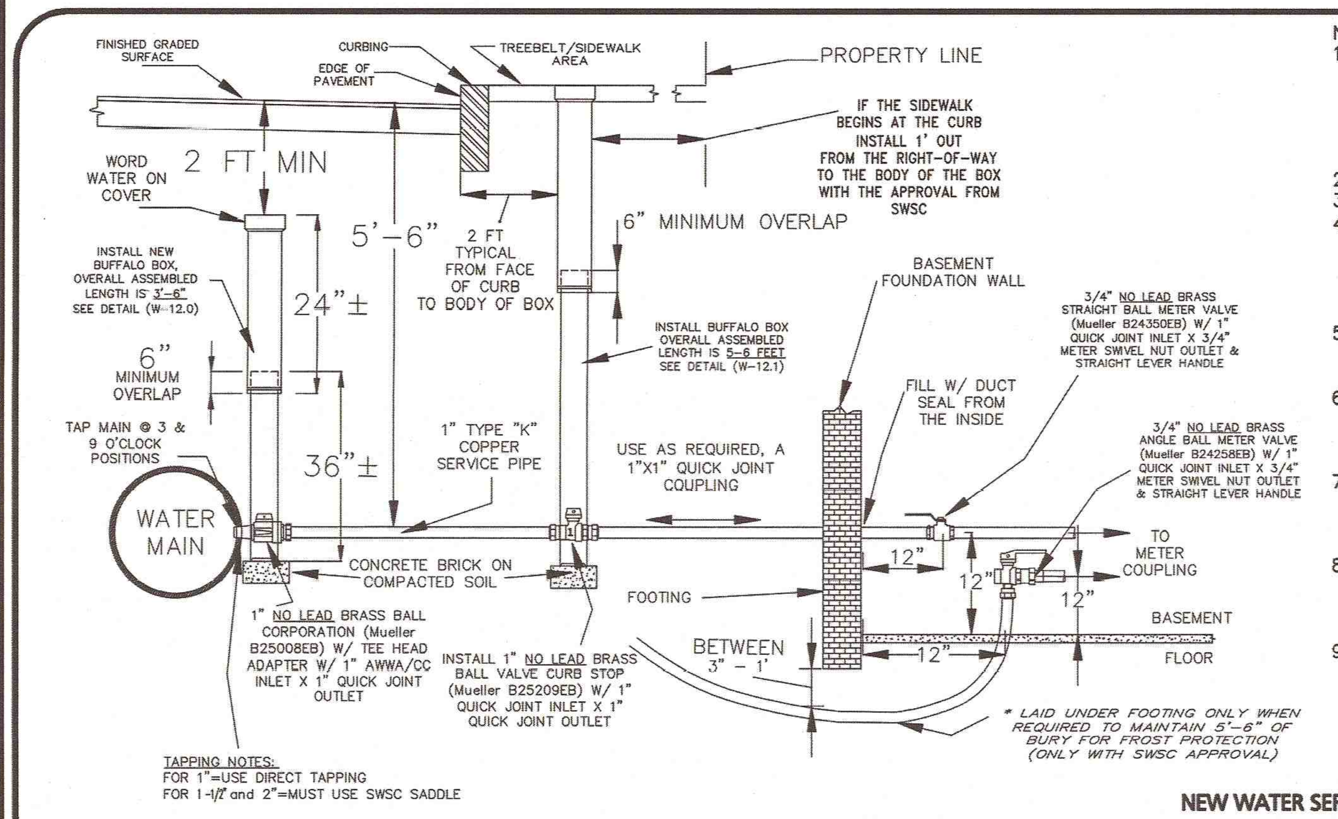

TAPPING NOTES:
FOR 1"=USE DIRECT TAPPING
FOR 1-1/2" and 2"=MUST USE SWSC SADDLE

NOTES:
1. ALL BRASS MUST BE LEAD FREE. ALL MUELLER PART NUMBERS REFERENCED IN THIS DRAWING MAY BE USED, FOR ADDITIONAL APPROVED MANUFACTURERS SEE THE SWSC MATERIAL SPECIFICATIONS.
2. TAPS DONE BY SWSC.
3. BLOCKING UNDER ALL FITTINGS.
4. ALL PIPE OR AWWA/CC THREADED JOINTS TO BE SEALED WITH TEFLON PIPE JOINT SEAL TAPE (PTFE). QUICK TYPE COMPRESSION JOINTS ARE NOT SEALED WITH TEFLON TAPE.
5. 3/4" COPPER TUBING SHALL NOT BE USED. ALL SERVICES SHALL BE 1" OR LARGER COPPER TUBING.
6. THE CORPORATION AT THE WATER MAIN IS FOR EMERGENCY USE AND THE BOX WILL BE BURIED 2-FEET BELOW FINISHED GRADE.
7. A SECOND OPERATIONAL CURB STOP SHALL BE INSTALLED IN THE TREEBELT. THE ARCH PATTERN BOX WILL BE SET AT FINISHED GRADE.
8. BOTH CURB BOXES WILL BE MEASURED FOR LOCATION TIES. A MINIMUM OF (3) TIES FOR EACH BOX.
9. SWSC DETAIL W-11.0 TAKEN FROM SWSC GUIDELINES AND POLICIES DETAIL DRAWINGS, VERSION 1, DATED APRIL 1, 2008.

NEW WATER SERVICE (W-11.0)
NOT TO SCALE
3

RELOCATION OF FIRE HYDRANT ASSEMBLY [STRAIGHT BACK] (W-07.3)

NOTES:
1. ALL MATERIALS WILL CONFORM TO SWSC SPECIFICATIONS AND INSTALLATION PROCEDURES SHALL CONFORM TO SWSC GUIDELINES & POLICIES AND POLICIES.
2. ALL WATER MAIN SHOULD HAVE A MINIMUM DEPTH OF 5' FROM TOP OF PIPE TO FINISH GRADE.
3. SEE DETAIL SHEET FOR TRENCH DETAIL.
4. ALL FIRE HYDRANTS SHALL BE INSTALLED PLUMB & LOCATED ACCORDING TO PROJECT PLANS.
5. NO TAPS SHALL BE ALLOWED BETWEEN THE HYDRANT & THE VALVE.
6. THE MECHANICAL JOINTS OF THE FIRE HYDRANT ASSEMBLY SHALL BE RESTRAINED VIA RETAINER GLAND. IF MORE THAN ONE SECTION IS USED, RETAINED GLAND RESTRAINTS SHALL BE USED AT ALL CONNECTIONS.
7. SWSC DETAIL W-07.3 TAKEN FROM SWSC GUIDELINES AND POLICIES DETAIL DRAWINGS, VERSION 1, DATED APRIL 1, 2008.

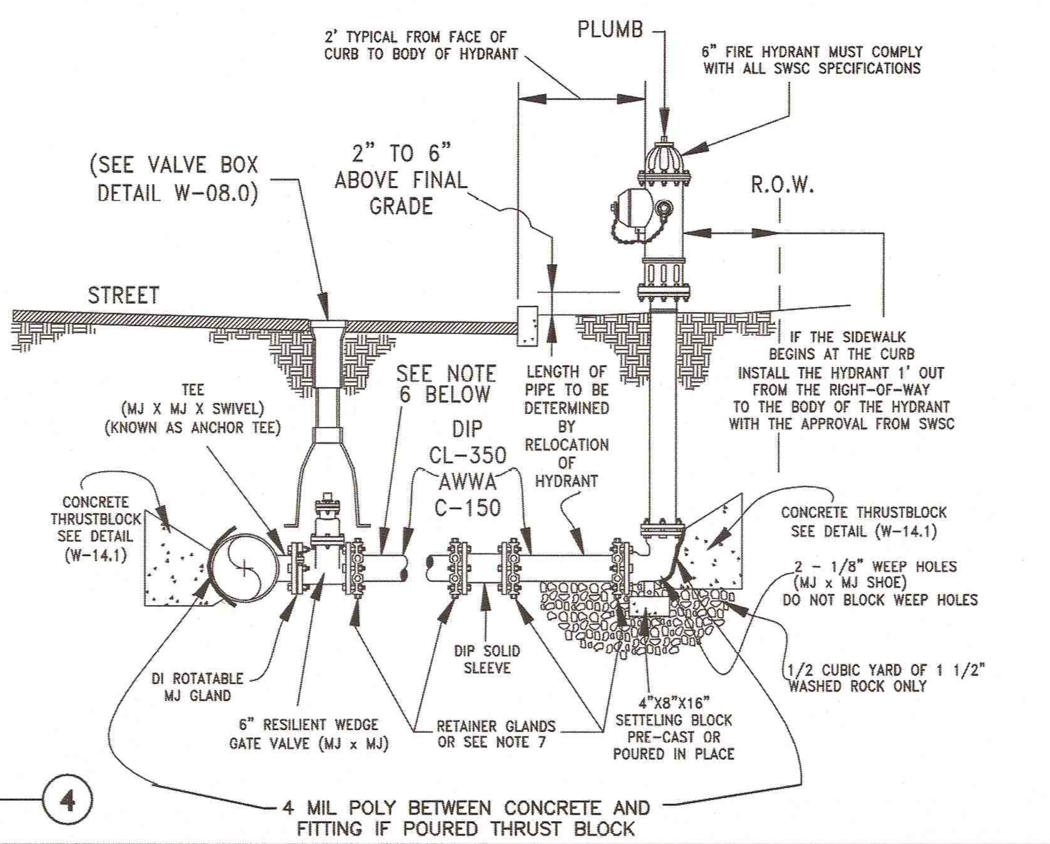

RELOCATION OF FIRE HYDRANT
ASSEMBLY [STRAIGHT BACK] (W-07.3)
NOT TO SCALE
4

REPLACEMENT WATER SERVICE (W-11.1)

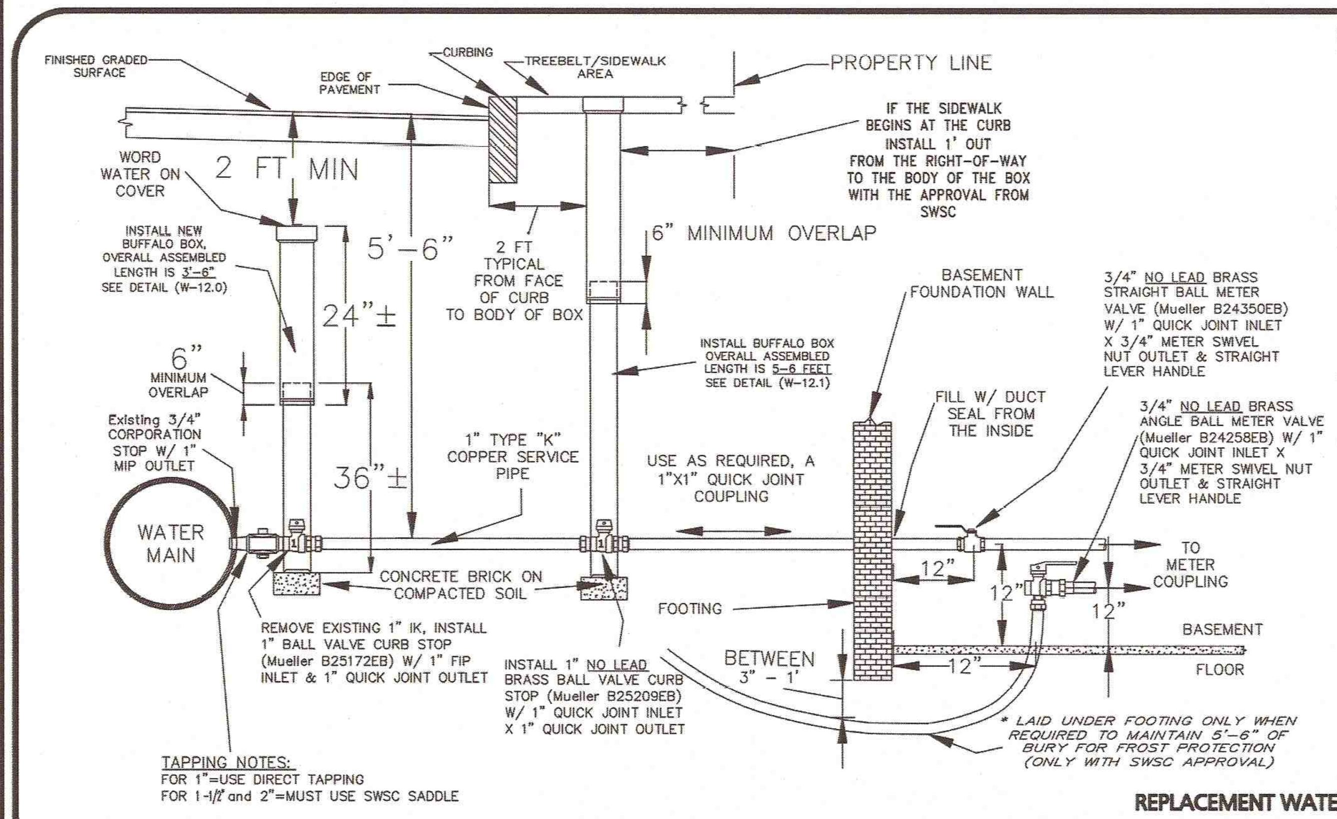

TAPPING NOTES:
FOR 1"=USE DIRECT TAPPING
FOR 1-1/2" and 2"=MUST USE SWSC SADDLE

NOTES:
1. ALL BRASS MUST BE LEAD FREE. ALL MUELLER PART NUMBERS REFERENCED IN THIS DRAWING MAY BE USED, FOR ADDITIONAL APPROVED MANUFACTURERS SEE THE SWSC MATERIAL SPECIFICATIONS.
2. TAPS DONE BY SWSC.
3. BLOCKING UNDER ALL FITTINGS.
4. ALL PIPE OR AWWA/CC THREADED JOINTS TO BE SEALED WITH TEFLON PIPE JOINT SEAL TAPE (PTFE). QUICK TYPE COMPRESSION JOINTS ARE NOT SEALED WITH TEFLON TAPE.
5. 3/4" COPPER TUBING SHALL NOT BE USED. ALL SERVICES SHALL BE 1" OR LARGER COPPER TUBING.
6. THE CORPORATION AT THE WATER MAIN IS FOR EMERGENCY USE AND THE BOX WILL BE BURIED 2-FEET BELOW FINISHED GRADE.
7. A SECOND OPERATIONAL CURB STOP SHALL BE INSTALLED IN THE TREEBELT. THE ARCH PATTERN BOX WILL BE SET AT FINISHED GRADE.
8. BOTH CURB BOXES WILL BE MEASURED FOR LOCATION TIES. A MINIMUM OF (3) TIES FOR EACH BOX.
9. SWSC DETAIL W-11.1 TAKEN FROM SWSC GUIDELINES AND POLICIES DETAIL DRAWINGS, VERSION 1, DATED APRIL 1, 2008.

REPLACEMENT WATER SERVICE (W-11.1)
NOT TO SCALE
6

DUCTILE IRON TAPPING SLEEVE (W-09.0)

NOTES:
1. ALL MATERIALS WILL CONFORM TO SWSC SPECIFICATIONS AND INSTALLATION PROCEDURES SHALL CONFORM TO SWSC GUIDELINES & POLICIES AND POLICIES.
2. ALL WATER MAIN SHOULD HAVE A MINIMUM DEPTH OF 5-FEET FROM TOP OF PIPE TO FINISH GRADE.
3. SEE TRENCH DETAILS.
4. SWSC DETAIL W-09.0 TAKEN FROM SWSC GUIDELINES AND POLICIES DETAIL DRAWINGS, VERSION 1, DATED APRIL 1, 2008.

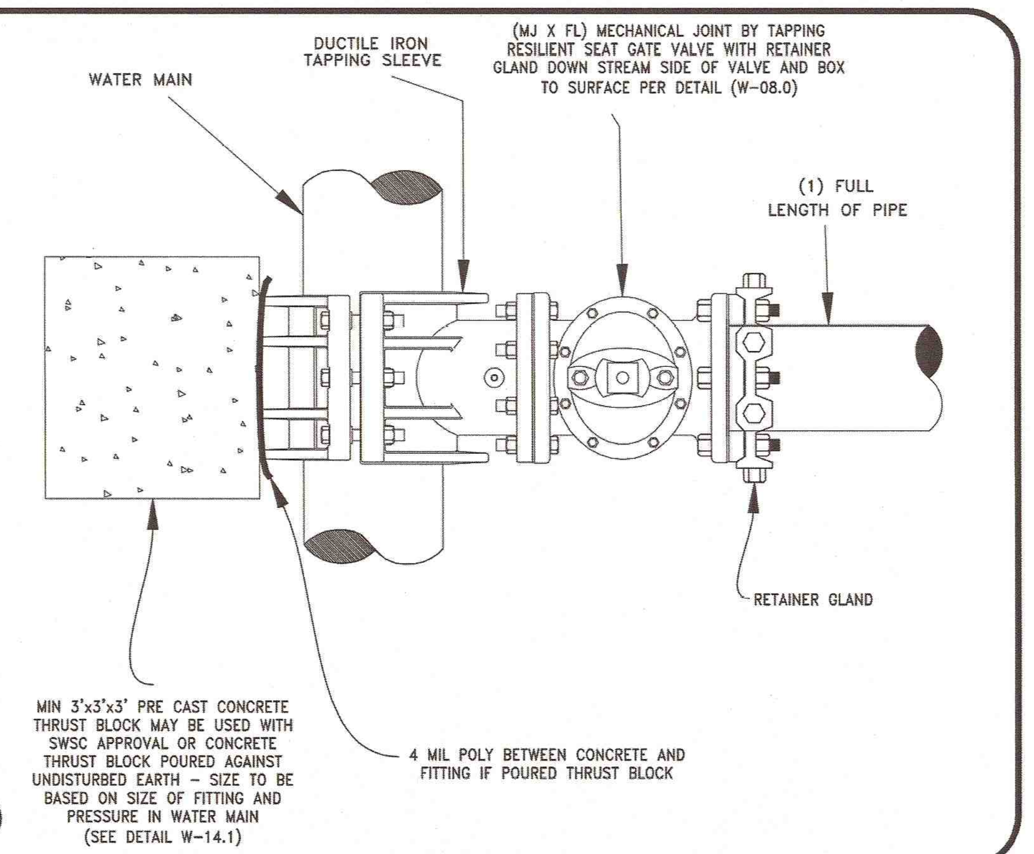

DUCTILE IRON TAPPING SLEEVE (W-09.0)
NOT TO SCALE
7

STAINLESS STEEL TAPPING SLEEVE (W-09.1)

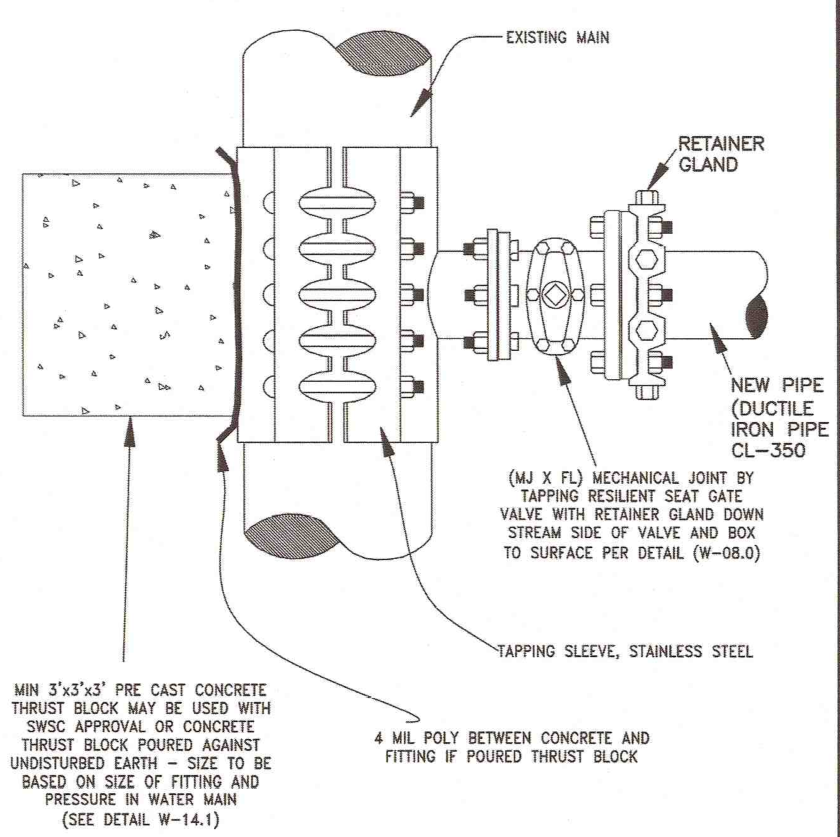

NOTES:
1. ALL MATERIALS WILL CONFORM TO SWSC SPECIFICATIONS AND INSTALLATION PROCEDURES SHALL CONFORM TO SWSC GUIDELINES & POLICIES AND POLICIES.
2. ALL WATER MAIN SHOULD HAVE A MINIMUM DEPTH OF 5-FEET FROM TOP OF PIPE TO FINISH GRADE.
3. SEE TRENCH DETAILS.
4. SWSC DETAIL W-09.1 TAKEN FROM SWSC GUIDELINES AND POLICIES DETAIL DRAWINGS, VERSION 1, DATED APRIL 1, 2008.

STAINLESS STEEL TAPPING SLEEVE (W-09.1)
NOT TO SCALE
9

SOCKET CLAMP DETAIL (W-06.7)

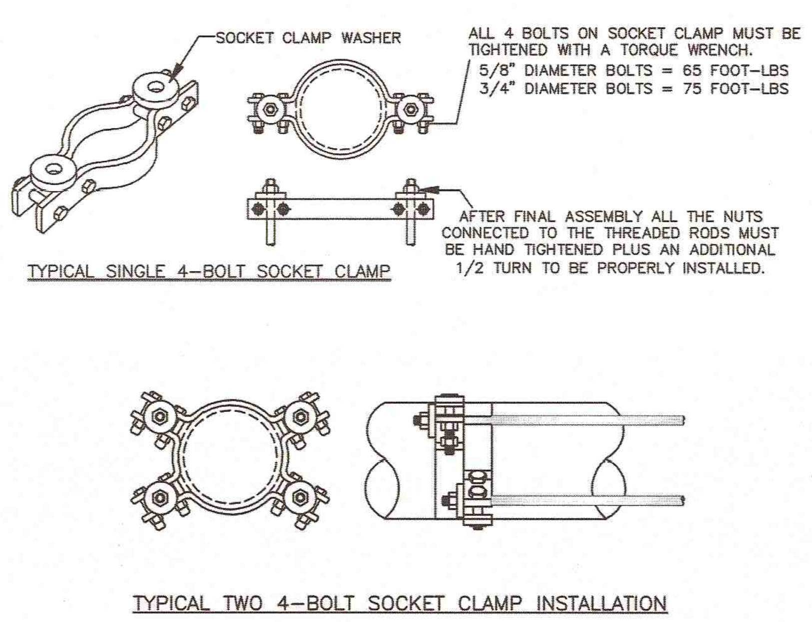

SOCKET CLAMP DATA CHART

Nominal Pipe Size (in inches)	Max Hydrostatic Test Pressure (in PSI)	Force (1) on Clamp (in lbs.)	Clamp (2 & 3) Inside Diameter (in inches)	Length of Clamp (2 & 3) (in inches)	Width of Clamp (2 & 3) (in inches)	Thickness of Clamp (2 & 3) (in inches)	Bolt Size	Thickness of CI Clamp Washer (4) (in inches)	Size of CI Clamp Washer (4) (in inches)	Thickness of Steel Clamp Washer (4) (in inches)	Size of Steel Clamp Washer (4) (in inches)	Nominal Threaded Rod (7) Diameter (in inches)	Number of Nominal Threaded Rod (7)	Associated Hardware
4	250	4550	5	14 5/8	2	1/2	5/8 x 3 1/2	5/8	3 dia or 3 x 3	1/2	3 dia or 3 x 3	3/4	1	notes 2, 5, 6, 8, & 9
6	250	9340	7 1/8	16 7/8	2	1/2	5/8 x 3 1/2	5/8	3 dia or 3 x 3	1/2	3 dia or 3 x 3	3/4	1	notes 2, 5, 6, 8, & 9
8	250	16080	9 5/16	19 1/8	2 1/2	5/8	5/8 x 3 3/4	5/8	3 dia or 3 x 3	1/2	3 dia or 3 x 3	3/4	1	notes 2, 5, 6, 8, & 9
10	250	24180	11 1/2	21 3/8	2 1/2	5/8	5/8 x 3 3/4	5/8	3 dia or 3 x 3	1/2	3 dia or 3 x 3	3/4	1	notes 2, 5, 6, 8, & 9
12	250	34230	13 1/2	25 1/8	3	5/8	7/8 x 4 1/2	3/4	3-1/2 dia or 3-1/2 x 3-1/2	1/2	3 dia or 3 x 3	1	1	notes 2, 5, 6, 8, & 9
16	115	27760	17 7/8	31 3/8	4	3/4	1 x 4 1/2	1	4 dia or 4 x 4	1/2	3-1/2 dia or 3-1/2 x 3-1/2	1	2	notes 2, 5, 6, 8, & 9

1. At Max Hydrostatic Test Pressure
2. All Socket Clamps and associated hardware shall meet the requirements of National Fire Protection Association 24
3. Socket Clamps shall be as provided by PHD Manufacturing, Inc. Figure 590, Anvil Company, Figure 595, Cooper B-Line, Figure B3134, Carpenter and Patterson, Figure 158DB, or the equal product of another manufacturer.
4. Socket Clamps Washers shall be as provided by PHD Manufacturing, Inc. Figure 595, Anvil Company, Figure 594, Cooper B-Line, Figure B3134W, Carpenter and Patterson, Figure 258, or the equal product of another manufacturer.
5. Bent Eye Bolts shall be constructed of high strength low alloy steel, per ASTM A588, grade B, Unified National Coarse (UNC) rolled thread.
6. Bent Eye Bolts shall be as provided by PHD Manufacturing, Inc. - Figure 598B, Star National Products - Figures ¾"SST747 or ¾"SST757, Dresser Piping Specialties, Inc. – Style 442, or the equal product of another manufacturer.
7. Threaded Rods shall be constructed of 4140-alloy steel, per ASTM A193, grade B7, Unified National Coarse (UNC) rolled thread.
8. Washers for bent eye bolts shall be cadmium plated and constructed of case hardened C1006 steel, grade 2, Rockwell hardness B55
9. Heavy hex nuts shall be constructed of medium carbon steel, ASTM A194, grade 2H, and Unified National Coarse (UNC) thread.

NOTES:
1. SWSC DETAIL W-06.7 TAKEN FROM SWSC GUIDELINES AND POLICIES DETAIL DRAWINGS, VERSION 1, DATED APRIL 1, 2008, REVISED JUNE 18, 2008.
2. ALL MATERIALS WILL CONFORM TO SWSC SPECIFICATIONS AND INSTALLATION PROCEDURES SHALL CONFORM TO SWSC GUIDELINES & POLICIES AND POLICIES.
3. NUMBER OF THREADED RODS IS BASE ON MAXIMUM PRESSURE OF 150 PSI IN MAIN.
4. THREADED RODS ARE TO BE FABRICATED FROM 4140 B-7 ALLOY STEEL.
5. STEEL THREADED RODS SHALL HAVE A YIELD STRESS OF NOT LESS THAN 105,000 PSI.
6. EYE-BOLTS SHALL HAVE A MINIMUM TENSILE STRENGTH OF 50,000 PSI EACH.
7. RESTRAINT FOR 20 INCHES AND LARGER PIPES MUST BE DESIGNED ON A CASE BY CASE BISI AND APPROVED BY ENGINEER & TECHNICAL SERVICES (ET&S).
8. ALL COMPONENTS TO BE PROTECTIVE COATED WITH PROTECTIVE COATINGS AND TAPE.

SOCKET CLAMP DETAIL (W-06.7)
NOT TO SCALE
8

N:\PROJECTS\1839-02\CIVIL\DRAWINGS\CURRENT\C-1839-02 – DETAILS.DWG

ENGINEER:

ALLEN & MAJOR ASSOCIATES, INC.
civil & structural engineering ♦ land surveying
environmental consulting ♦ landscape architecture
www.allenmajor.com
100 COMMERCE WAY
P.O. BOX 2118
WOBURN MA 01888-0118
TEL: (781) 935-6889
FAX: (781) 935-2896
WOBURN, MA ♦ LAKEVILLE, MA ♦ MANCHESTER, NH

SEAL:

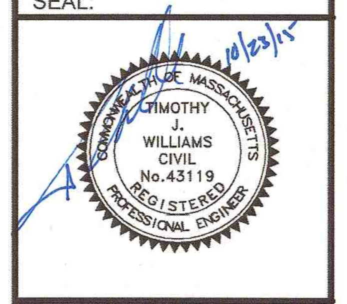

CONSULTANT:

OWNER:

MGM RESORTS INTERNATIONAL™
3260 Industrial Road, Las Vegas,NV 89109
702.692.9622 Phone 702.862.1750 Fax

MGM SPRINGFIELD
SPRINGFIELD, MA

PROJECT:
MGM SPRINGFIELD - SITE/CIVIL RECORD

REVISIONS:

NO.	DATE	ISSUE
1	10/23/15	SITE PLAN APPROVAL

THIS DRAWING HAS BEEN PREPARED IN ELECTRONIC FORMAT. CLIENT/CLIENT'S REPRESENTATIVE OR CONSULTANT MAY BE PROVIDED COPIES OF DRAWINGS AND SPECIFICATIONS ON MAGNETIC MEDIA FOR HIS/HER INFORMATION AND USE FOR SPECIFIC APPLICATION TO THIS PROJECT. DUE TO THE POTENTIAL THAT THE MAGNETIC INFORMATION MAY BE MODIFIED UNINTENTIONALLY OR OTHERWISE, ALLEN & MAJOR ASSOCIATES, INC. MAY REMOVE ALL INDICATION OF THE DOCUMENT'S AUTHORSHIP ON THE MAGNETIC MEDIA. PRINTED REPRESENTATIONS OF THE DRAWINGS AND SPECIFICATIONS ISSUED SHALL BE THE ONLY RECORD COPIES OF ALLEN & MAJOR ASSOCIATES, INC.'S WORK PRODUCT.

Copyright 2015 Allen & Major Associates, Inc.
All Rights Reserved

DRAWING TITLE:

DETAILS
WATER

All dimensions, levels, layouts and field conditions shall be verified at the site by the contractor before proceeding with the work.

MRID Project No.	58012MASS
Consultant Project No.	1839-02D
Date:	08/14/2015

Drawn By	Checked By	Approved By
KEA	TJW	TJW

File Name: C1839-02D

D-13

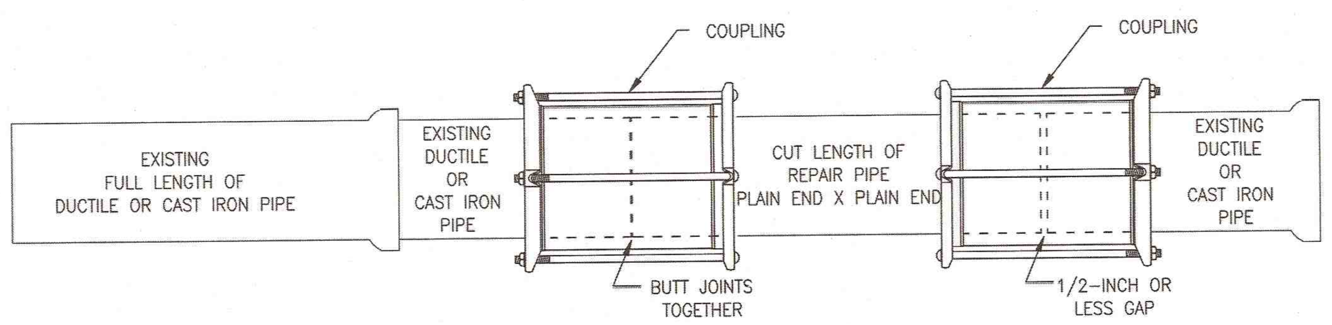

NOTES:
1. ALL MATERIALS WILL CONFORM TO SWSC SPECIFICATIONS AND INSTALLATION PROCEDURES SHALL CONFORM TO SWSC GUIDELINES & POLICIES AND POLICIES.
2. ALL WATER MAIN SHOULD HAVE A MINIMUM DEPTH OF 5' FROM TOP OF PIPE TO FINISH GRADE.
3. SEE DETAIL SHEETS FOR TRENCH DETAILS.
4. THESE METHODS SHALL BE USED UNLESS OTHERWISE APPROVED BY SPRINGFIELD ENGINEERING AND TECHNICAL SERVICES DEPARTMENT.
5. WHEN REPAIRING NEAR A VALVE OR A FITTING USE AN APPROVED METHOD OR CALL SPRINGFIELD ENGINEERING AND TECHNICAL SERVICES (ET&S).
6. SWSC DETAIL W-6.0 TAKEN FROM SWSC GUIDELINES AND POLICIES DETAIL DRAWINGS, VERSION 1, DATED APRIL 1, 2008.

REPAIR TO EXISTING WATER MAINS (W-6.0) (1)

NOT TO SCALE

NOTES:
1. ALL MATERIALS WILL CONFORM TO SWSC SPECIFICATIONS AND INSTALLATION PROCEDURES SHALL CONFORM TO SWSC GUIDELINES & POLICIES AND POLICIES.
2. NUMBER OF THREADED RODS IS BASED ON MAXIMUM PRESSURE OF 150 P.S.I. IN MAIN.
3. THREADED RODS ARE TO BE FABRICATED FROM 4140 B-7 ALLOY STEEL.
4. STEEL THREADED RODS SHALL HAVE A YIELD STRESS OF NOT LESS THAN 105,000 P.S.I.
5. EYE-BOLTS SHALL HAVE A MINIMUM TENSILE STRENGTH OF 50,000 P.S.I. EACH.
6. RESTRAINT FOR 20 INCHES AND LARGER PIPES MUST BE DESIGNED ON A CASE-BY-CASE BASIS AND APPROVED BY SPRINGFIELD ENGINEERING AND TECHNICAL SERVICES (ET&S).
7. ALL COMPONENTS TO BE PROTECTIVE COATED WITH PROTECTIVE COATINGS AND TAPE.
8. SWSC DETAIL W-6.1 TAKEN FROM SWSC GUIDELINES AND POLICIES DETAIL DRAWINGS, VERSION 1, DATED APRIL 1, 2008.

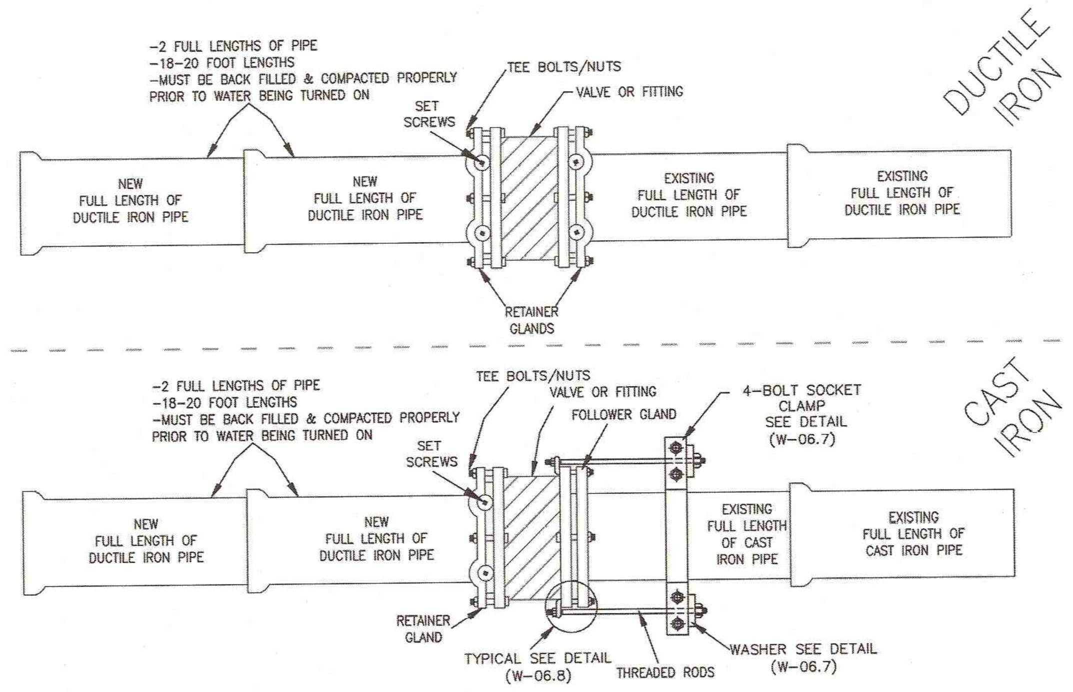

INSTALL VALVE OR FITTING AT A DEAD END OF WATER MAIN (W-6.1) (2)

NOT TO SCALE

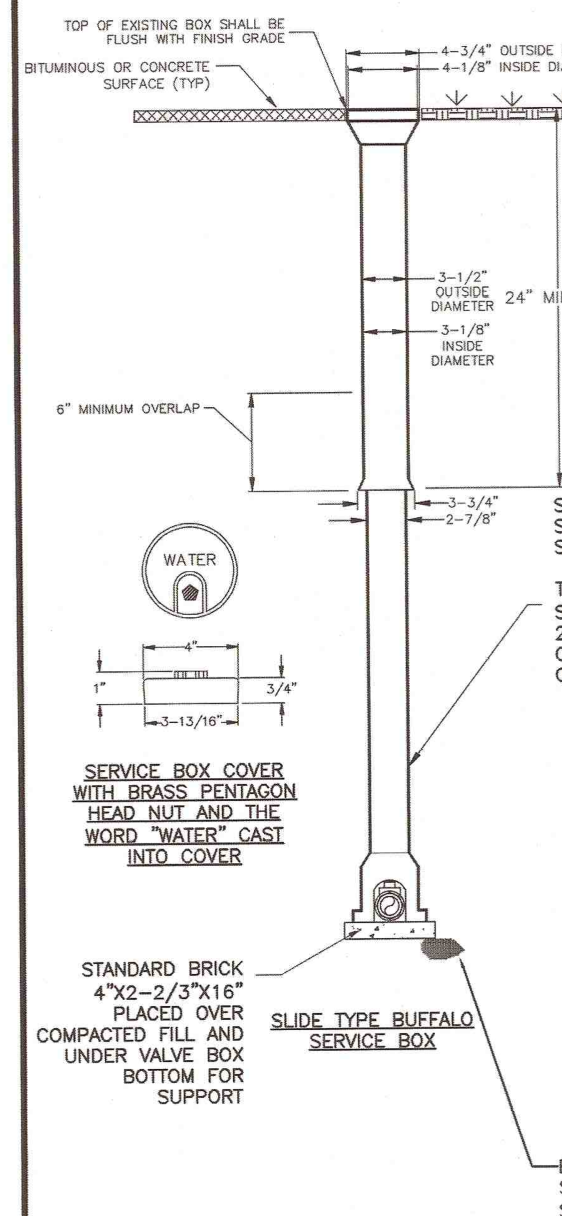

STANDARD SERVICE BOX SEE SWSC TECHNICAL SPECIFICATIONS

THE ARCH PATTERN BASE SHALL ACCOMMODATE 3/4 TO 2-INCH BALL TYPE CORPORATIONS AND BALL TYPE CURB STOPS

A) FOR 1-INCH BALL TYPE CORPORATIONS AND BALL TYPE CURB STOPS THE ARCH SHALL BE AT LEAST 5-INCHES TALL WITH A 3-INCH BY 3-INCH ARCH & CENTERED OVER 1-INCH BALL TYPE CORPORATION
B) FOR 1-1/2-INCH TO 2-INCH BALL TYPE CORPORATIONS AND BALL TYPE CURB STOPS THE ARCH SHALL BE AT LEAST 7-INCHES TALL WITH A 4-INCH BY 4-INCH ARCH
C) SEE TYPICAL SERVICE BOX DETAIL IN PAVED AREAS IF THIS INSTALLATION IS USED AT A WATER MAIN

BACKFILL WITH SAND, CRUSHED STONE, SCREENED GRAVEL, OR SELECT COMMON BORROW/FILL TO 6" ABOVE PIPE IN 12" LIFTS COMPACTION TO 95% PROCTOR

NOTES:
1. ALL MATERIALS WILL CONFORM TO SWSC SPECIFICATIONS AND INSTALLATION PROCEDURES SHALL CONFORM TO SWSC GUIDELINES AND POLICIES.
2. ALL WATER MAIN SHOULD HAVE A MINIMUM DEPTH OF 5-FEET FROM TOP OF PIPE TO FINISH GRADE.
3. SEE TRENCH DETAILS.
4. IF BACKFILLING WITH "FLOWABLE" FILL WRAP THE SERVICE BOX WITH 15 POUND FELT ROOFING PAPER OR 4 MIL THICK POLYETHYLENE IN ACCORDANCE WITH SWSC DETAIL: REPLACE, RAISE, OR RESET SERVICE BOX.
5. SWSC DETAIL W-12.1 TAKEN FROM SWSC GUIDELINES AND POLICIES DETAIL DRAWINGS, REVISION 3, DATED 4/1/10.

TYPICAL SERVICE BOX DETAIL IN NON-PAVED AREAS (W-12.1) (5)

NOT TO SCALE

NOTES:
1. ALL MATERIALS WILL CONFORM TO SWSC SPECIFICATIONS AND INSTALLATION PROCEDURES SHALL CONFORM TO SWSC GUIDELINES & POLICIES AND POLICIES.
2. NUMBER OF THREADED RODS IS BASE ON MAXIMUM PRESSURE OF 150 PSI IN MAIN.
3. THREADED RODS ARE TO BE FABRICATED FROM 4140 B-7 ALLOY STEEL.
4. STEEL THREADED RODS SHALL HAVE A YIELD STRESS OF NOT LESS THAN 105,000 PSI.
5. EYE-BOLTS SHALL HAVE A MINIMUM TENSILE STRENGTH OF 50,000 PSI EACH.
6. RESTRAINT FOR 20 INCHES AND LARGER PIPES MUST BE DESIGNED ON A CASE BY CASE BISI AND APPROVED BY ENGINEER & TECHNICAL SERVICES (ET&S).
7. ALL COMPONENTS TO BE PROTECTIVE COATED WITH PROTECTIVE COATINGS AND TAPE.
8. SWSC DETAIL W-06.5 TAKEN FROM SWSC GUIDELINES AND POLICIES DETAIL DRAWINGS, VERSION 1, DATED APRIL 1, 2008.

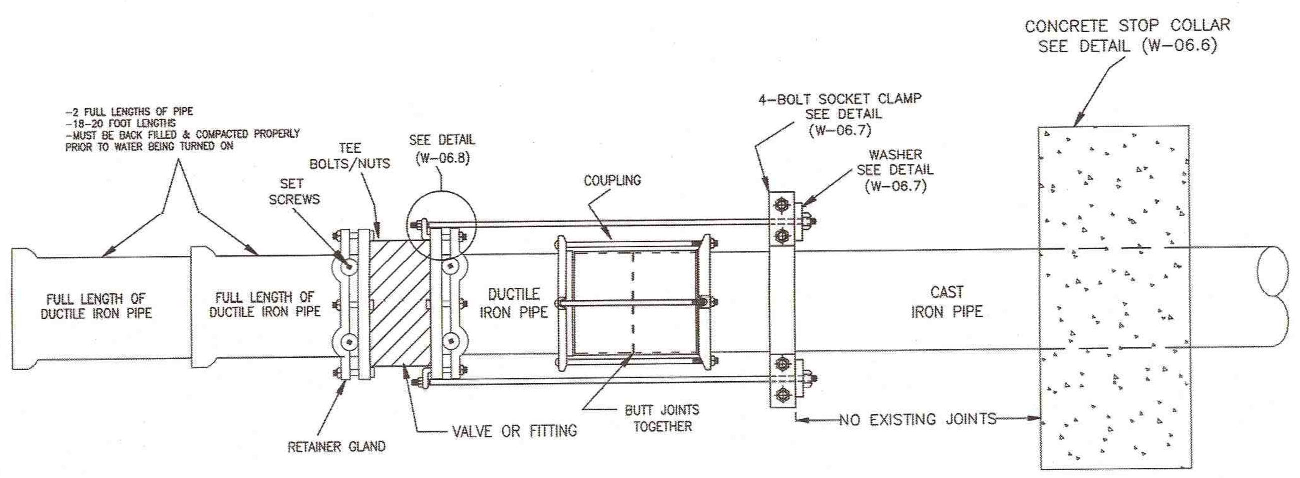

CUTTING INTO EXISTING WATER MAIN WITH NO BELL FOUND (W-06.5) (7)

NOT TO SCALE

NOTES:
1. ALL MATERIALS WILL CONFORM TO SWSC SPECIFICATIONS AND INSTALLATION PROCEDURES SHALL CONFORM TO SWSC GUIDELINES & POLICIES AND POLICIES.
2. NUMBER OF THREADED RODS IS BASED ON MAXIMUM PRESSURE OF 150 P.S.I. IN MAIN.
3. THREADED RODS ARE TO BE FABRICATED FROM 4140 B-7 ALLOY STEEL.
4. STEEL THREADED RODS SHALL HAVE A YIELD STRESS OF NOT LESS THAN 105,000 P.S.I.
5. EYE-BOLTS SHALL HAVE A MINIMUM TENSILE STRENGTH OF 50,000 P.S.I. EACH.
6. RESTRAINT FOR 20 INCHES AND LARGER PIPES MUST BE DESIGNED ON A CASE-BY-CASE BASIS AND APPROVED BY SPRINGFIELD ENGINEERING AND TECHNICAL SERVICES (ET&S).
7. ALL COMPONENTS TO BE PROTECTIVE COATED WITH PROTECTIVE COATINGS AND TAPE.
8. SWSC DETAIL W-6.2 TAKEN FROM SWSC GUIDELINES AND POLICIES DETAIL DRAWINGS, VERSION 1, DATED APRIL 1, 2008.

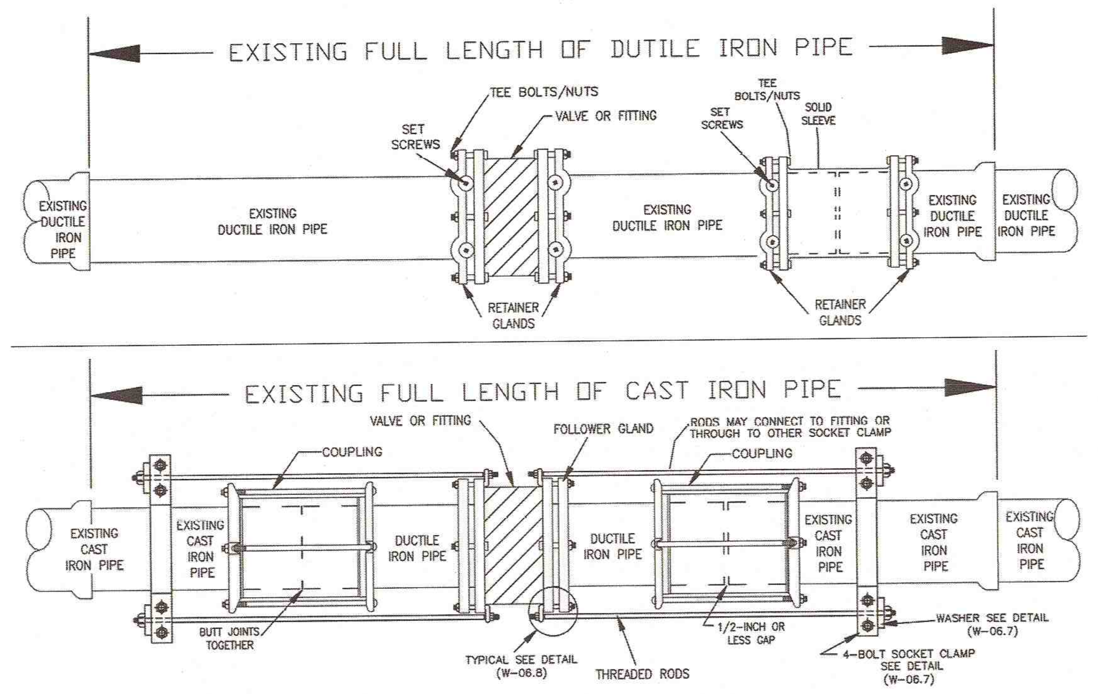

CUTTING - INTO EXISTING WATER MAIN TO REPLACE VALVE OR FITTING (W-6.2) (4)

NOT TO SCALE

NOTES:
1. SWSC DETAIL W-06.6 TAKEN FROM SWSC GUIDELINES AND POLICIES DETAIL DRAWINGS, VERSION 1, DATED APRIL 1, 2008, REVISED JUNE 18, 2008.
2. ALL MATERIALS WILL CONFORM TO SWSC SPECIFICATIONS AND INSTALLATION PROCEDURES SHALL CONFORM TO SWSC GUIDELINES & POLICIES AND POLICIES.
3. NUMBER OF THREADED RODS IS BASE ON MAXIMUM PRESSURE OF 150 PSI IN MAIN.
4. THREADED RODS ARE TO BE FABRICATED FROM 4140 B-7 ALLOY STEEL.
5. STEEL THREADED RODS SHALL HAVE A YIELD STRESS OF NOT LESS THAN 105,000 PSI.
6. EYE-BOLTS SHALL HAVE A MINIMUM TENSILE STRENGTH OF 50,000 PSI EACH.
7. RESTRAINT FOR 20 INCHES AND LARGER PIPES MUST BE DESIGNED ON A CASE BY CASE BISI AND APPROVED BY ENGINEER & TECHNICAL SERVICES (ET&S).
8. ALL COMPONENTS TO BE PROTECTIVE COATED WITH PROTECTIVE COATINGS AND TAPE.

CONCRETE THRUST COLLAR

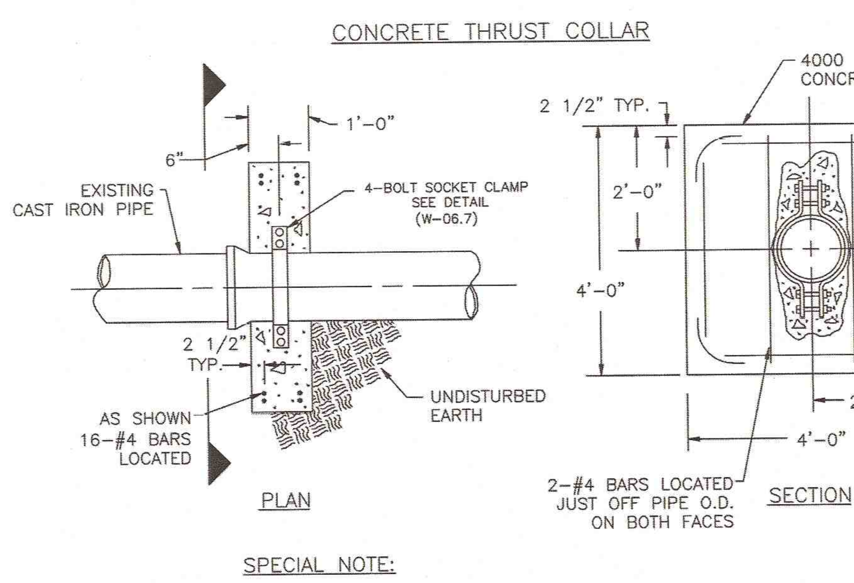

SPECIAL NOTE:

1. IN LIEU OF CONCRETE STOP COLLAR THE CONTRACTOR MAY MECHANICALLY RESTRAIN (BY APPROVED METHOD) THREE (3) FULL PIPE LENGTHS FROM PROPOSED LOCATION OF STOP COLLAR.

CONCRETE THRUST COLLAR (W-06.6) (6)

NOT TO SCALE

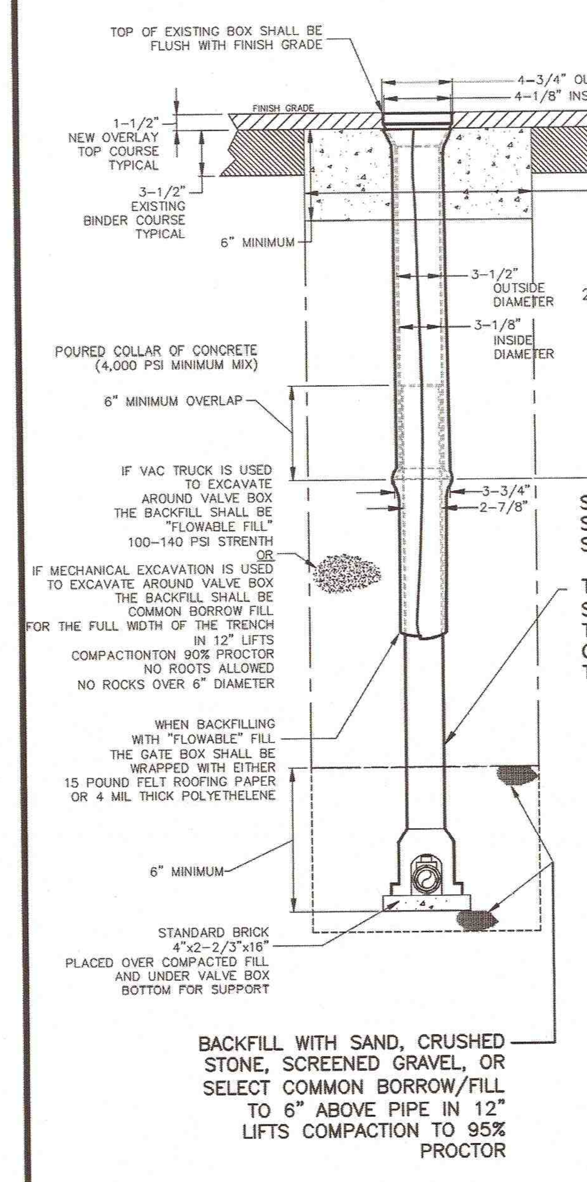

POUR 4,000 PSI CONCRETE MIX TO ALL EDGES OF EXCAVATION

STANDARD SERVICE BOX SEE SWSC TECHNICAL SPECIFICATIONS

THE ARCH PATTERN BASE SHALL ACCOMMODATE 3/4 TO 2-INCH BALL TYPE CORPORATIONS AND BALL TYPE CURB STOPS

A) FOR 1-INCH BALL TYPE CORPORATIONS AND BALL TYPE CURB STOPS THE ARCH SHALL BE AT LEAST 5-INCHES TALL WITH A 3-INCH BY 3-INCH ARCH & CENTERED OVER 1-INCH BALL TYPE CORPORATION
B) FOR 1-1/2-INCH TO 2-INCH BALL TYPE CORPORATIONS AND BALL TYPE CURB STOPS THE ARCH SHALL BE AT LEAST 7-INCHES TALL WITH A 4-INCH BY 4-INCH ARCH
C) SEE TYPICAL SERVICE BOX DETAIL IN PAVED AREAS IF THIS INSTALLATION IS USED AT A WATER MAIN

NOTES:
1. ALL MATERIALS WILL CONFORM TO SWSC SPECIFICATIONS AND INSTALLATION PROCEDURES SHALL CONFORM TO SWSC GUIDELINES AND POLICIES.
2. ALL WATER MAIN SHOULD HAVE A MINIMUM DEPTH OF 5-FEET FROM TOP OF PIPE TO FINISH GRADE.
3. SEE TRENCH DETAILS.
4. SWSC DETAIL W-08.1 TAKEN FROM SWSC GUIDELINES AND POLICIES DETAIL DRAWINGS, REVISION 1, DATED 4/1/09.

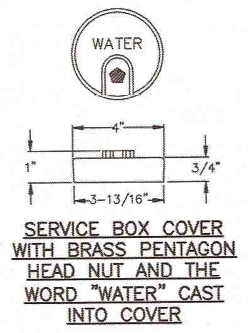

REPLACE, RAISE, OR RESET SERVICE BOX (W-12.2) (8)

NOT TO SCALE

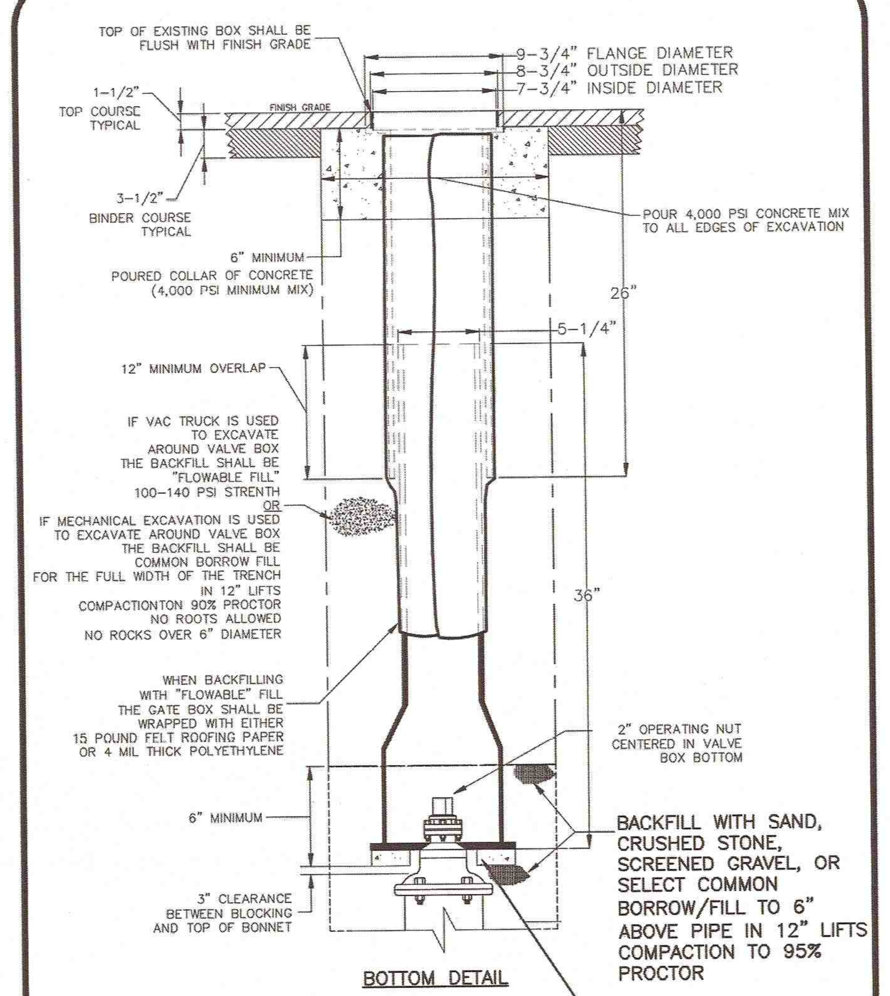

NOTES:
1. ALL MATERIALS WILL CONFORM TO SWSC SPECIFICATIONS AND INSTALLATION PROCEDURES SHALL CONFORM TO SWSC GUIDELINES AND POLICIES.
2. ALL WATER MAIN SHOULD HAVE A MINIMUM DEPTH OF 5-FEET FROM TOP OF PIPE TO FINISH GRADE.
3. SEE TRENCH DETAILS.
4. SWSC DETAIL W-08.1 TAKEN FROM SWSC GUIDELINES AND POLICIES DETAIL DRAWINGS, REVISION 1, DATED 4/1/09.

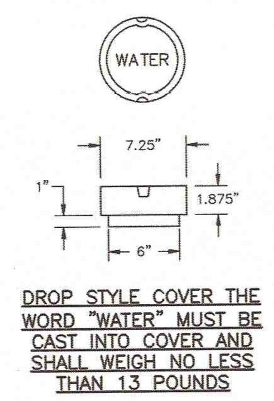

REPLACE, RAISE, OR RESET VALVE BOX (W-08.1) (9)

NOT TO SCALE

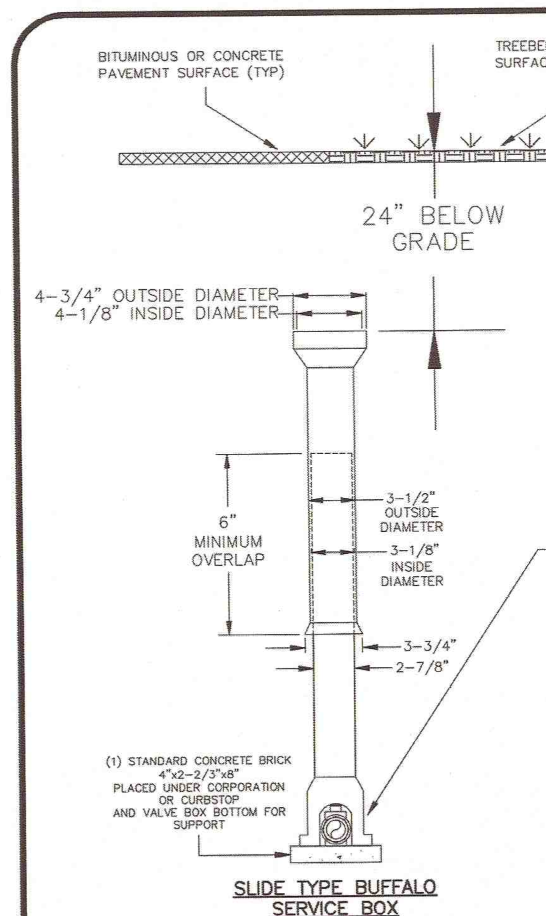

STANDARD SERVICE BOX SEE SWSC TECHNICAL SPECIFICATIONS

THE ARCH PATTERN BASE SHALL ACCOMMODATE 3/4 TO 2-INCH BALL TYPE CORPORATIONS AND BALL TYPE CURB STOPS

A) FOR 1-INCH BALL TYPE CORPORATIONS AND BALL TYPE CURB STOPS THE ARCH SHALL BE AT LEAST 5-INCHES TALL WITH A 3-INCH BY 3-INCH ARCH & CENTERED OVER 1-INCH BALL TYPE CORPORATION
B) FOR 1-1/2-INCH TO 2-INCH BALL TYPE CORPORATIONS AND BALL TYPE CURB STOPS THE ARCH SHALL BE AT LEAST 7-INCHES TALL WITH A 4-INCH BY 4-INCH ARCH

NOTES:
1. ALL MATERIALS WILL CONFORM TO SWSC SPECIFICATIONS AND INSTALLATION PROCEDURES SHALL CONFORM TO SWSC GUIDELINES AND POLICIES.
2. ALL WATER MAIN SHOULD HAVE A MINIMUM DEPTH OF 5-FEET FROM TOP OF PIPE TO FINISH GRADE.
3. SEE TRENCH DETAILS.
4. SWSC DETAIL W-12.0 TAKEN FROM SWSC GUIDELINES AND POLICIES DETAIL DRAWINGS, REVISION 2, DATED 4/1/09.

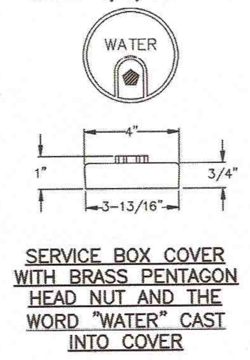

APPROXIMATELY 1/2" TO BE REMOVED FROM SIDE OF BASE CLOSEST TO WATER MAIN IN ORDER TO CONFIRM THE BASE IS OVER THE 1-1/2"-2" BALL TYPE CURB STOPS (SEE DETAIL A).

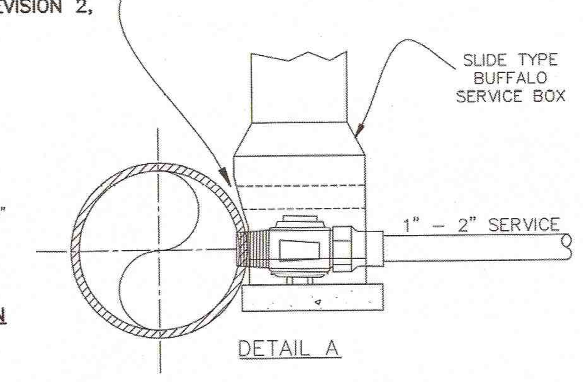

TYPICAL SERVICE BOX DETAIL IN PAVED AREAS (W-12.0) (10)

NOT TO SCALE

NOT USED (7)

NOT TO SCALE

N:\PROJECTS\1839-02\CIVIL\DRAWINGS\CURRENT\C-1839-02 - DETAILS.DWG

ENGINEER:

ALLEN & MAJOR ASSOCIATES, INC.
civil & structural engineering ♦ land surveying
environmental consulting ♦ landscape architecture
www.allenmajor.com
100 COMMERCE WAY
P.O. BOX 2118
WOBURN MA 01888-0118
TEL: (781) 935-6889
FAX: (781) 935-2896
WOBURN, MA ♦ LAKEVILLE, MA ♦ MANCHESTER, NH

SEAL:

COMMONWEALTH OF MASSACHUSETTS
TIMOTHY J. WILLIAMS
CIVIL
No.43119
REGISTERED PROFESSIONAL ENGINEER
10/23/15

CONSULTANT:

OWNER:

MGM RESORTS INTERNATIONAL™
3260 Industrial Road, Las Vegas,NV 89109
702.692.9622 Phone 702.862.1750 Fax

MGM SPRINGFIELD
SPRINGFIELD, MA

PROJECT:
MGM SPRINGFIELD - SITE/CIVIL RECORD

REVISIONS:

NO.	DATE	ISSUE
1	10/23/15	SITE PLAN APPROVAL

THIS DRAWING HAS BEEN PREPARED IN ELECTRONIC FORMAT. CLIENT/CLIENT'S REPRESENTATIVE OR CONSULTANT MAY BE PROVIDED COPIES OF DRAWINGS AND SPECIFICATIONS ON MAGNETIC MEDIA FOR HIS/HER INFORMATION AND USE FOR SPECIFIC APPLICATION TO THIS PROJECT. DUE TO THE POTENTIAL THAT THE MAGNETIC INFORMATION MAY BE MODIFIED UNINTENTIONALLY OR OTHERWISE, ALLEN & MAJOR ASSOCIATES, INC. MAY REMOVE ALL INDICATION OF THE DOCUMENT'S AUTHORSHIP ON THE MAGNETIC MEDIA. PRINTED REPRESENTATIONS OF THE DRAWINGS AND SPECIFICATIONS ISSUED SHALL BE THE ONLY RECORD COPIES OF ALLEN & MAJOR ASSOCIATES, INC.'S WORK PRODUCT.

Copyright 2015 Allen & Major Associates, Inc.
All Rights Reserved

DRAWING TITLE:

DETAILS
WATER

All dimensions, levels, layouts and field conditions shall be verified at the site by the contractor before proceeding with the work.

MRID Project No.	58012MASS
Consultant Project No.	1839-02D
Date:	08/14/2015

Drawn By	Checked By	Approved By
KEA	TJW	TJW

File Name: C1839-02D

D-14